BULBOUS BOW DESIGN OPTIMIZATION FOR FAST SHIPS

by

GEORGIOS KYRIAZIS
B.S. Marine Engineering Hellenic Naval Academy, 1988

Submitted to the Department of Ocean Engineering
in partial fulfillment of the requirements for the degrees of

Naval Engineer
and
Master of Science in Ocean Systems Management

at the
MASSACHUSETTS INSTITUTE OF TECHNOLOGY
June 1996

Author ....
Department of Ocean Engineering
May 10, 1996

Certified by ....
Paul D. Sclavounos, Professor of Naval Architecture
Thesis Supervisor, Department of Ocean Engineering

Certified by ....
Alan J. Brown, Professor of Naval Construction and Engineering
Thesis Reader, Department of Ocean Engineering

Accepted by ....
Douglas A. Carmichael, Professor of Power Engineering
Chairman, Ocean Engineering Departmental Graduate Committee

BULBOUS BOW DESIGN OPTIMIZATION FOR FAST SHIPS

by

GEORGIOS KYRIAZIS

Submitted to the department of Ocean Engineering on May 10, 1996 in partial fulfillment of the requirements for the Degrees of Naval Engineer and Master of Science in Ocean Systems Management.

ABSTRACT

Using the TGC-770, a fine-form, high-speed vessel, as the reference hull form, a series of variant hull forms with bulbous bows was designed. These variants were analyzed hydrodynamically utilizing the code SWAN, in order to investigate the effects of changes in bulb parameters on the total calm water resistance and seakeeping performance of the original TGC-770 original hull form. The wave resistance coefficients calculated by SWAN were combined with model test results to estimate the total calm water resistance for all hull forms. In addition, heave and pitch RAO's as well as the added resistance in head seas were calculated by the code so that the effect of the bulb could be determined.

Finally, a total logistics cost savings comparison of the original and the bulbous bow hull forms and its effect on latent and stimulated demand revealed the advantages of the bulbous bow hull form for fine-form, high-speed ships.

Thesis Supervisor : Paul D. Sclavounos

Title : Professor of Naval Architecture

ACKNOWLEDGMENTS

I would like to express my sincere thanks to Professor Paul D. Sclavounos for his guidance and our discussions all along this last year. I would also like to thank Professor Alan J. Brown for his advice and comments.

I also wish to associate David Kring for all his understanding cooperation in the use of the code SWAN and Alexis Mantzaris for his help with the code TUBOLA.

Finally, this work is dedicated to my parents. Without their encouragement and support everything would have been much more difficult.

Table of Contents

List of Figures

List of Tables

Chapter 1

Introduction

Today, the possibility of numerical potential flow calculations by use of codes directly allows naval architects to investigate hull changes before tank testing. Although tank testing is still required at the final stage, since the potential flow calculations do not accurately predict the actual flow fields and viscous effects, the latter are sufficiently accurate, in a relative sense, to optimize the hull form before model testing begins. This approach to hull design optimization was successfully used in recent years by several scientists.

An area in which small changes in underwater hull form geometry can lead to significant changes in ship total resistance is in the use of bow bulbs. Chapter 2 presents a literature overview for this area of study. Although naval architects have realized since the turn of the century that the addition of a bulb to the bow can reduce the total resistance of the ship, most research has concentrated primarily on low speed, full form ships.

The objective of this study was to investigate the effects of changes in bulb parameters on the resistance and seakeeping performance for a high speed, fine form ship (TGC-770). The bulbous bow design methodology, which was used to design and fair the bulb into the rest of the hull, and the bulbous bow variants that were investigated are presented in Chapter 3. Chapter 4 presents the computer codes that were used in this study to design the bulbous bow hull variants and predict their resistance and seakeeping performance.

Chapter 5 presents the results from the numerical potential flow calculations for the bulbous bow variants. The effects of the bulb's length and diameter on total calm water resistance, added resistance, heave and pitch RAO's in head seas were studied.

This high speed vessel is designed to operate in the North Atlantic serving the transatlantic trade. Chapter 6 presents the North Atlantic freight market and the benefits that TGC-770 is going to provide to shippers in terms of total logistics cost savings. In Chapter 7 an operating cost savings analysis for the bulbous bow variants and a total logistics cost comparison with TGC-770 are performed.

Finally, Chapter 8 gives the conclusions drawn from this study for the potential use of a bulbous bow in the final hull design of TGC-770.

Chapter 2

Literature review

2.1 General

Nearly 90 years ago, R. E. Froude interpreted the lower resistance of a torpedo boat, after fitting of a torpedo tube, as the wave reduction effect of the thickening of the bow due to the torpedo tube. D. W. Taylor was the first to recognize the bulbous bow as an elementary device to reduce the wavemaking resistance. In 1907 he fitted the battleship Delaware with a bulbous bow to increase the speed at constant power. In spite of great activities in the experimental field to explore its potential, seventy years passed before the bulb finally asserted itself as an elementary device in practical shipbuilding. Especially for fast ships, the use of a bulb allows a departure from previously accepted design principles for the benefit of a better underwater form.

The most important effect of a bulbous bow is its influence on the different resistance components and consequently on the required power. For a better understanding, the following subdivision of the total resistance (R_T) is used :

$$R_T = R_V + R_{WF} + R_{WB} = R_F + R_{VR} + R_{WF} + R_{WB}$$

where

R_V = viscous resistance

R_F = frictional resistance

R_{VR} = viscous residual resistance

R_{WF} = wavemaking resistance

R_{WB} = wave-breaking resistance

The latter two components are related to wavemaking. Their contributions to the total resistance are very different for ships with different block coefficients and speeds.

The additional bulb surface always increases the frictional resistance R_F, which is the main part of the viscous component R_V. Up to now, it is not quite clear whether the bulb affects the viscous residual resistance R_{VR} due to the variation of the velocity field in the near bow range.

There is no doubt concerning the influence of the bulbous bow on wavemaking resistance R_{WF}. The linearized theory of wave resistance has rendered the most important contribution to the clarification of this problem. According to this theory, the bulb problem is a pure interference problem of the free wave systems of the ship and the bulb. Depending on phase difference and amplitudes, a total mutual cancellation of both interfering wave systems may occur. The longitudinal position of the bulb causes the phase difference, while its volume is related to the amplitude. The wave resistance is evaluated by analysis of the free wave patterns measured in model experiments.

The wave-breaking resistance R_{WB} depends directly on the rising and development of free as well as local waves in the vicinity of forebody and is a question of typical spray phenomenon. Understanding the breaking phenomenon of ship waves is important in the bulb design for full ships. The wave-breaking resistance includes all parts of the energy loss by the breaking of too-steep bow waves. The main part of this energy can be detected by wake measurements. The local wave system contributes the main part to this resistance component. This wave system consists primarily of the two back waves of bow and stern which are generated by deflection of the momentum.

The wave-breaking resistance can be diminished only insofar as it is possible to prevent the breaking of bow waves. According to the reason of its creation, this is only possible by changing the deflection of momentum or the bow near the velocity field, respectively. In general this can be achieved not only by a bulbous bow, but by suitable hydrofoils as well.

It has been shown by model experiments and by linear theory that the effect of a bulb cannot be achieved by variations of the hull form, such as an increase of the block coefficient corresponding to the bulb volume or an elongation of the ship length corresponding to the bulb length.

The exact effect of bulbous bows on the prementioned components of resistance depends on the form of the ship, on the speed and on the loading condition. Therefore it is important to realize that a specific ship-bulb combination that shows a good performance at a certain condition may behave poorly at an off-design one.

As far as the seakeeping effects of the bulbous bow are concerned, no attempt to solve theoretically the problem has been found in the literature. The current practice is to proceed with the design in view of the calm water performance only and to investigate the seakeeping aspects by doing model tests.

From the above, it can be concluded that the question shouldn't be which is the optimal bulb for a specific ship, but rather which is a good one in terms of combining favorable characteristics in all the operational conditions of the vessel.

In addition to reducing the resistance of a hull form, bulbous bows also influence other properties of a ship. Model tests have shown that bulbous bows can influence the quasi-propulsive coefficient, wake fraction and thrust deduction fraction. However, it is not certain if these bulb effects are present in the full scale ship because of the importance of scale effects on the expansion of these model test results. Bulbous bows do not seem to significantly influence course stability or maneuverability, although the bulb behaves as a 'rudder' in the bow. Model tests in regular waves tend to indicate that the bulbous ship is the best ship,in terms of resistance, regardless of seakeeping aspects up to a wavelength to ship's length ratio of about 0.8 .

Moreover, slamming and resultant hull damage are also a concern, though in general there is little evidence that ships with bulbs have suffered any worse in this respect. Out-size bulbs introduce some problems in berthing and anchoring. As these factors present no reasons sufficient to prevent the utilization of a bulbous bow, it appears that bulb design may be based solely on calm water characteristics.

For ice navigation, ships equipped with bulbous bows have a definite advantage. The bulbs tend to tip the ice floes so that they slide along the ship's hull on their wet side, which has a smaller friction coefficient. Therefore, the speed loss of a ship equipped with a bulbous bow in ice is less than that of the same ship without a bow bulb.

Furthermore, the bulb is an ideal place for the arrangement of bow thrusters and acoustic sounding gear. Many warships today carry large sonar equipment forward and certainly every effort should be made to house these in bulbs which will at least not add to the hull resistance at service speeds.

Recognizing the importance of the bulb form in reducing a ship's resistance, it is necessary to classify bulbs according to some geometric parameters. Kracht [1] differentiated bulbs into three main categories according to the shape of the bulb's cross section at the forward perpendicular. These three classes are presented below and are depicted graphically in Figure 2-1.

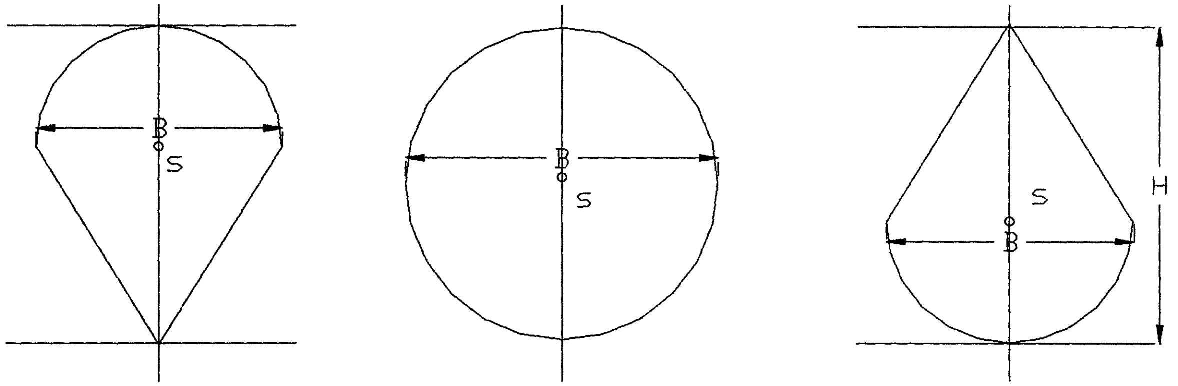

∇ - TYPE □ - TYPE Δ - TYPE

Figure 2-1 : Bulbous bow types

- ∇ - Type : Figure 2-1 shows the nabla type of bulb which has a drop-shaped sectional area. However, its center of area is situated in the upper half , indicating a volume concentration near the free surface. Because of its favorable seakeeping properties, this type is the most common bulb in use today.

- O - Type : This type, also shown in Figure 2-1, has an oval sectional area, a center of area in the middle and a central volumetric concentration. All the circular, elliptical and lens-shaped bulbs as well as the cylindrical bulbs belong to this type.
- Δ - Type : Figure 2-1 shows the drop-shaped sectional area of the delta type bulb with the center of area in the lower half. This shape indicates a concentration of the bulb volume near the base. The Taylor bulb and the pear-shaped bulbs belong to this type.

2.2 Theoretical Approach

In this section, the problem that the bulbous bow attempts to solve is described. Furthermore, the methods and guidelines currently used in its design are described. The theoretical approach presented is that by Yim [2].

2.2.1 The Ship's - Bulb's Waves

In the following analysis, the right handed rectangular coordinate system 0-xyz is defined so that the origin is located on both the undisturbed free surface and the bow stem : the x-axis, in the direction of the flow at infinity, the z-axis positive upward. According to Inui [3] , the regular wave system in the negative -x direction created by a doublet at $(0,0,-\bar{z}_l)$ with strength $-\mu$ is given by the following formula :

$$\zeta_b = -\mu \int_0^{\pi/2} A_b(\theta) \sin\{k \ \sec^2\theta\,(x\cos\theta + y\sin\theta)\}\, d\theta \qquad (2\text{-}1)$$

where

ζ_b is the bow wave amplitude

θ is the angle between the ship's course and a line perpendicular to the crest of a divergent wave

$k = {gL}/{V^2}$

$A_b(\theta)$ is the amplitude function :

$$A_b(\theta) = 8k^2 \exp(-k\bar{z}_l \sec^2\theta)\sec^4\theta \qquad (2\text{-}2)$$

Any ship can be approximated by a centerplane source distribution :

$$m = \frac{\bar{B}}{2}\sum_{n=0}^{N}(-1)^n \frac{(\pi x)^{2n}}{(2n)!} \qquad (2\text{-}3)$$

on $D = \{\, y = 0 \,,\, 0<x<1 \,,\, 0>z_l>-\bar{T} \,\}$

where $\bar{T}$ is the draft to length ratio and $\bar{B}$ is the beam to length ratio.

This distribution produces regular waves as a superposition of positive elementary sine waves :

$$\zeta_s = \int_0^{\pi/2} A_s(\theta)\,\sin(k\sec^2(\theta)(x\cos\theta + y\sin\theta))\,d\theta \qquad (2\text{-}4)$$

where A_s is the ship wave amplitude function :

$$A_s(\theta) = (1 - e^{-k\bar{T}\sec^2\theta})\frac{4\bar{B}}{k}\sum_{n=0}^{\infty}\frac{\pi^{2n}}{(k\sec\theta)^{2n}} \qquad (2\text{-}5)$$

We see that A_s is proportional to $\bar{B}$ and therefore a proper combination of $\bar{B}$ and μ will minimize the superposed amplitude function.

Yim assumed the ship to be the superposition of n elementary sine ships, each one represented by the source distribution of equation (2-3) :

$$y = f(x,z) = (\,1 + \beta z\,)\sum_{i=1}^{n}\alpha_i \sin\left(\frac{\pi x - x_i}{1 - 2x_i}\right) \qquad (2\text{-}6)$$

where $x = x_i$ and $x = 1 - x_i$ are the end points of each of the elementary sine ships and the constant β is the longitudinal average of the vertical slope of the ship surface near the water surface.

Equation (2-6) describes the surface of a ship which is symmetrical fore and aft. However, this symmetry is not important in the problem discussed here. The coefficients α_i and β have to be obtained so that the forward part of a given ship is closely represented by equation (2-6).

Surface waves may be considered to be linearly superposable. Therefore, if each elementary ship creates minimum amplitude waves, the total waves resulting from the superposition of waves created by each elementary ship will likely be of minimum amplitude. In general, the distances between bow waves of elementary sine ships are much smaller than the ship wave length for operational speeds. Thus, interactions between bow waves of elementary sine ships are almost always unfavorable and decrease with the amplitudes of the waves due to each elementary sine ship. Consequently, each elementary sine ship can be made into an optimal bulbous sine ship by finding a doublet at the bow which minimizes the wave resistance.

2.2.2 Optimum bulb sizes for an elementary sine ship

Haverlock gives the following wave resistance formula :

$$R=\frac{1}{2}\int_{0}^{\pi/2}(A_1^{\,2}+A_2^{\,2})\cos^3\theta\, d\theta \tag{2-7}$$

where A_1 and A_2 are amplitude functions of the sine and cosine elementary wave systems, respectively.

If only the bow wave resistance is considered, we can write:

$$R_{1B}=\frac{1}{2}\int_{0}^{\pi/2}\{-\mu A_b(\theta)+A_{sB}(\theta)\}^2\cos^3\theta\, d\theta \tag{2-8}$$

where

R_{1B} is the bow wave resistance due to the combination of a doublet at

$(0,0,-\bar{z}_l)$ with strength $-\mu$ and an elementary sine ship-source distribution represented by equation (2-6). Also :

$$A_{sB}=\frac{4\bar{B}Ek^2\sec^4\theta}{(k^2\sec^2\theta-\pi^2)}=4\bar{B}Ek\sec^2\theta\sum_{n=0}^{\infty}\frac{\pi^{2n}}{(k\sec\theta)^{2n}}$$

$$E=\{1-\exp(-k\bar{T}\sec^2\theta)\}\,/\,(k\sec^2\theta)$$

$$A_b(\theta) = 8k^2 \exp(-k\bar{z}_l \sec^2\theta)\sec^4\theta$$

We can minimize R_{1B} by setting :

$$\frac{\partial R_{1B}}{\partial \mu} = 0 \Leftrightarrow \frac{\mu}{\bar{B}} = \frac{\frac{1}{\bar{B}}\int_0^{\pi/2} A_{sB}(\theta) A_b(\theta)\cos^3\theta d\theta}{\int_0^{\pi/2} A_b(\theta)^2 \cos^3\theta \, d\theta} \tag{2-9}$$

For a deeply submerged sphere of radius r_b in an otherwise uniform flow, there is a relation :

$$\mu = \frac{r_b^{\ 3}}{2} \tag{2-10}$$

which means that μ is proportional to the bulb volume.

Since for a sine ship with the entrance angle α_E :

$$\tan(\frac{\alpha_E}{2}) = \frac{\bar{B}}{2}$$

the optimum bulb volume is proportional to $\tan(\frac{\alpha_E}{2}) \cong \frac{\alpha_E}{2}$, or half the angle of entrance.

In linear theory, from the concept of wave cancellation there is no doubt that as far as the sine ship is concerned, the best longitudinal position of a sphere which minimizes the wave resistance in inviscid flow is at the bow stem. It is also known that there exists a doublet distribution which totally cancels bow waves if the doublet is distributed on an infinitely long vertical line at the bow stem. According to Yim, the optimal doublet distribution on the vertical bow stem from the free surface to the keel is a bugle shape having the maximum strength at the keel and creating an onion shape bulb. In general, as it can be seen from Figure 2-2, the best shape of the vertical doublet distribution along the bow stem is almost equivalent to the concentration of the doublet near the keel. In practice, the vertical location of the bulb is generally selected in order to make the flow to the keel smooth by locating the center of the bulb at one bulb radius above the keel. Figure 2-3 presents the relation between the vertical location and the optimal sizes of bulbs for a sine ship with $L/T = 20$ and for different half angles of entrance. Reference [2] includes more diagrams for different L/T ratios.

2.2.3 Superposition of elementary bulbous sine ships

The first thing to be considered in the superposition of the elementary bulbous sine ships is the allocation of a bulbous section on the sectional area curve of a given ship. Although each elementary sine ship has a slightly different Froude number and it is better to calculate the optimum bulb size as accurately as possible, it can be assumed for convenience that the Froude numbers are the same for all the elementary ships considered here.

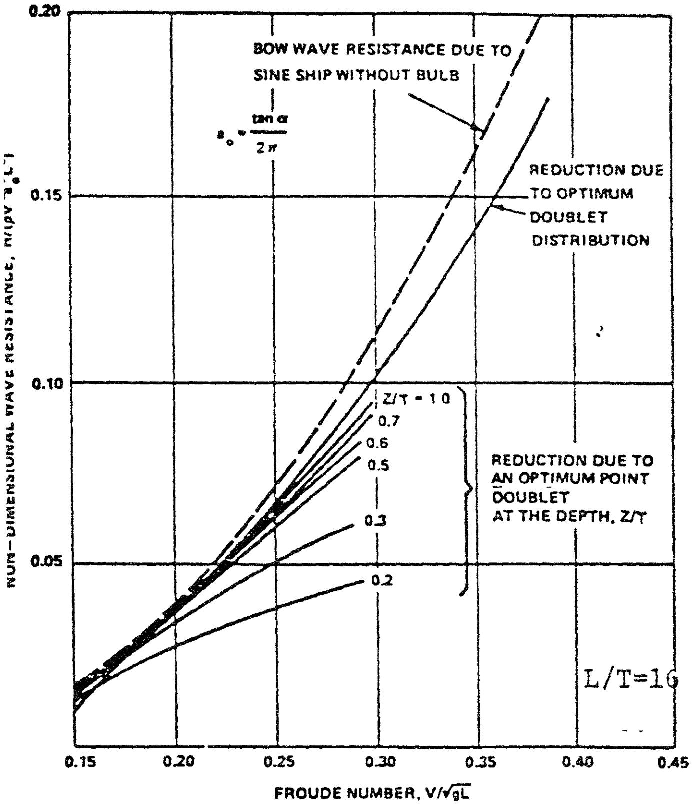

Figure 2-2 : Reduction in bow wave resistance due to an optimum point doublet located at various depths at the stem of sine ship

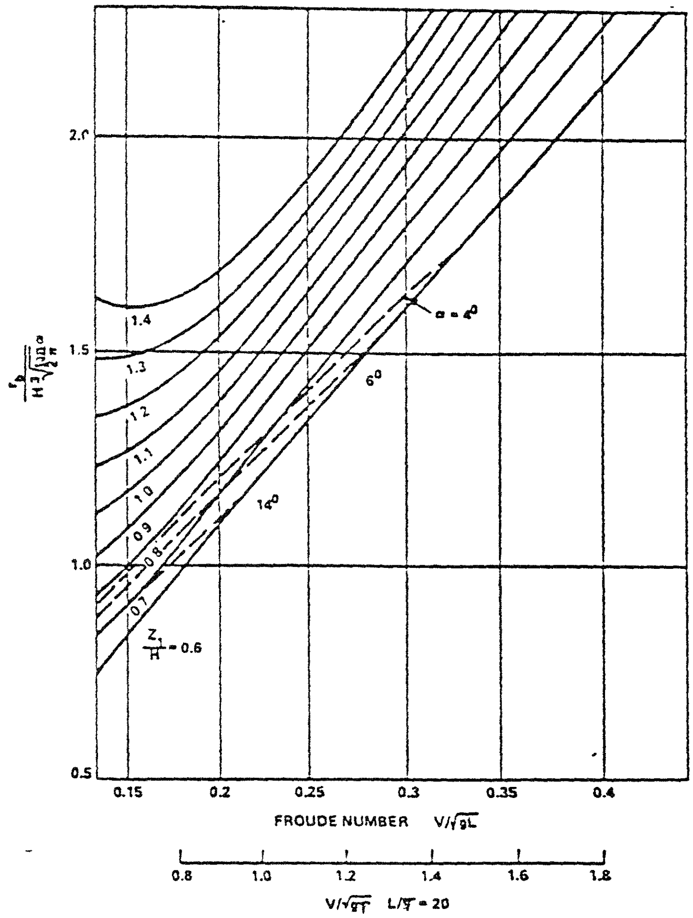

Figure 2-3 : Optimum spherical bulb for sine ships

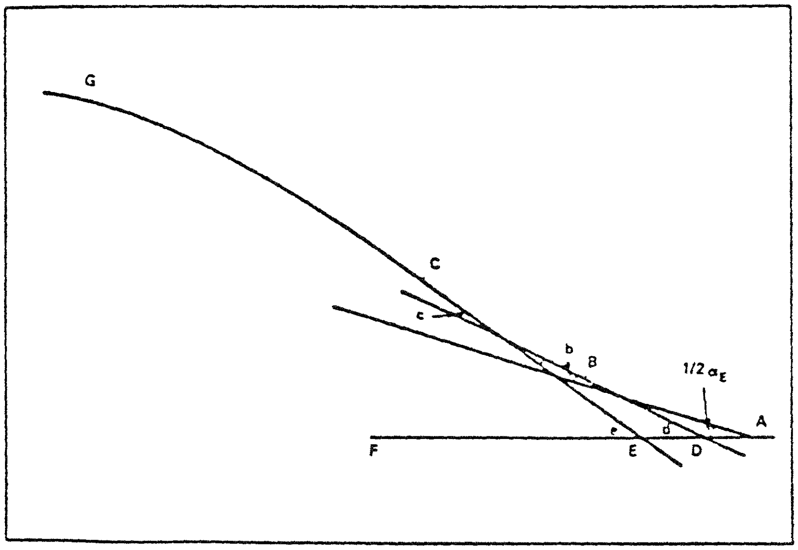

Figure 2-4 : Entrance angles of elementary ships

Consequently, the T/L ratios are not very different and bulb sizes are not very sensitive to T/L . Then, there exists an interesting, simple relationship between the slope of the waterline and the total bulb volume. In Figure 2-4, a load waterline ABCG of a ship, which is hollow near the bow and has one inflection point, is considered to be divided into elementary sine curves, starting from points A, B and C respectively. It can be assumed that the tangent at each point almost coincides with the curve. Therefore, the entrance angle of the sine ship at B is almost equal to the angle b between two tangents from A and B. Similarly, angle c is almost equal to the entrance angle of the elementary sine ship at C. It is easily seen in Figure 2-4 that :

$$\frac{1}{2}\alpha_E + b = d$$

$$\frac{1}{2}\alpha_E + b + c = e$$

Since the bulb volume is proportional to the entrance angle of the elementary sine ship for a given Froude number, we see that the total bulb volume is the same as that for the optimum bulb for the sine ship of entrance angle e or, approximately, the same as the optimal bulb size at E for waterline ECG. The bulb volume has been considered to be smoothly distributed along the curve ABC corresponding to the entrance angles of the elementary sine ships at as many points as possible. However, in practice it is not necessary to take too many points, but rather to spread the bulb volume obtained at each point to form a smooth total section area curve. Thus, except for the bulb at the forward perpendicular of the original ship, the additional sectional area due to the optimum bulb at a station can be represented by the optimum bulb volume divided by the proper segment length between the adjacent stations where the bow stems of the elementary ships are located. It is recommended to consider the bulb volume :

$$\frac{4\pi}{3}\frac{r_b^3}{BHL}=\frac{V_b}{BHL} \qquad (2\text{-}11)$$

spread over the given interval $l_n / L\ [=(x_{n+1}-x_{n-1})/2]$ centered at x_n . Thus, the approximate sectional area of the bulb at x_n is $s_b/(BH)=V_b/(BHl_n)$.

In order to avoid flow separation, the bulb volume at the forward perpendicular (FP) should be split in half, one half to be distributed immediately aft of FP and the other half forward. Careful attention should be paid into making the flow around the bow to the bilge smooth, while keeping the total volume of the bulb optimum.

The shape of the bulb in front of the forward perpendicular of the original ship would be almost spherical if only inviscid flow was considered. However, in practice, the bulb volume assigned forward of the FP may be formed as a horizontally oriented circular cylinder with a spherical or parabolic nose smoothly fitted to the bow. If the original ship is like the sine ships without the hollow part of the waterline near the bow, any other bulb volume used to fair the bulb to prevent flow separation would contribute to increased wave resistance. Here, a tradeoff with separation is necessary. If a change of the original ship form is permitted, a redistribution of bulb volume may be considered with the corresponding waterline change without changing the total volume of the bulb.

2.3 Existing Design Methods

In 1960, Takahei [5] developed a method of designing what he called a 'wave-making resistanceless hull form'. After having verified experimentally that the wavemaking characteristics of a bulb can be practically represented by an isolated point doublet, he used stereo-photography to analyze the wave pattern and to confirm the condition of wave cancellation.

The main hull was represented as a source distribution which creates a pure positive sine wave, whose origin is always at the bow, no matter how the Froude number changes. Furthermore, the hull didn't have a parallel middle body in order not to create shoulder waves.

The bulb wave can for all practical purposes be replaced by a point doublet wave. This wave has inverse phase (negative sine) with respect to the bow (and stern) waves. Thus, it is possible to select a bulb of spherical shape whose volume corresponds to the selected doublet. The relationship between the strength M of the doublet and the radius r of the sphere is given by the following formula :

$$M = 2\pi\, r^3 V$$

Takahei's study deals only with the cancellation of bow waves. However, stern waves can be treated in a similar manner [5] .

In 1965, Van Lammeren and Wahab [8] investigated the effect of large spherical bulbs in the resistance of a fast cargo liner. The radius of the sphere needed to reduce the bow wave system as much as possible was determined by a simple approximation theory, using the same method adopted by Havelock [6], [7] and Inui [5]. The resulting equation was:

$$\left(\frac{r}{L}\right)^3 = \frac{a}{2\pi} F^6 e^{f/LF^2} \frac{(1-e^{-T/LF^2})}{(1-\pi^2 F^4)} \tag{2-12}$$

where

r is the radius of the sphere

L is the length between perpendiculars

F is the Froude number ($=V/\sqrt{gL}$)

α is the double angle of entrance

f is the distance of the center of the sphere from the waterline

Van Lammeren's experiments investigated the optimum location of the sphere relative to the bow, the effect of the angle of entrance on wave resistance and, finally, the reduction in total resistance. This reduction was found to be 8.9% at Fn = 0.27 .

In 1966, Couch and Moss [9] published their findings from a model test program whose purpose was to investigate the effect of different bulbs installed on tankers. Three series of bulbs were designed, each as an attempt to investigate changes in certain parameters. The reduction achieved in effective horsepower was as much as 25% in ballast and as much as 10% in full load condition, both at design speeds.

Kracht [1] presented a comprehensive design method for bulbous bows in 1978. His paper describes a quantitative design method for bulbous bows, together with the necessary data providing relationships between performance and main parameters of ships and bulbs. The data, presented in the form of design charts, are derived from a statistical analysis of routine test results of the Hamburg HSVA and Berlin VWS Model Basins, respectively. Three main hull parameters are taken into account : block coefficient, length/beam ratio and beam/draft ratio, while six bulb quantities are selected and reduced to bulb parameters, of which the volume, the section area at FP and the protruding length of the bulb are the most important. For power calculation, the total power is subdivided into a frictional and a residual part. Depending on bulb parameters and Froude number, six graphs of residual power reduction for each block coefficient have been prepared .

Another bulb design method is the XY wave survey method. According to this method, the energy flux out of a control volume ABCD is measured (see Figure 2-5). This results in the wave resistance :

$$R_W = \rho g \, (I + 0.5\,\overline{AB}\,A^2)$$

where $I = \int_{x_B}^{\infty} XY dx$, A is the amplitude of the following waves at the point of trancation of the wave signals and X , Y are the x, y components of the force exerted by the model wave system on a long thin vertically oriented circular cylinder at a distance y

$=\overline{AB}$ from the model centerline. The term $0.5\,\overline{AB}\,A^2$ measures the energy flux through AB.

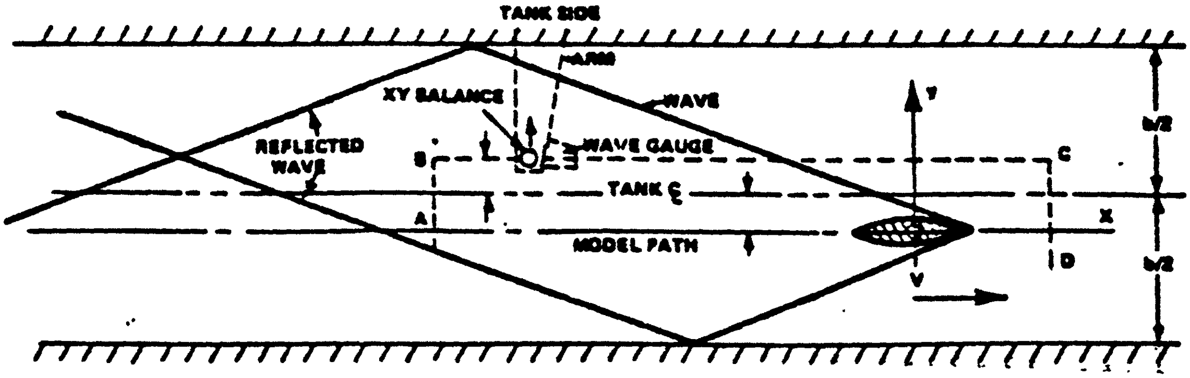

Figure 2-5 : Experimental set-up for the wave survey method

The hull form used in the wave survey was the MARAD 'Securtity Class' multi-purpose mobilization ship and it was found that an elliptical bulb is the most appropriate to minimize the bare hull resistance at design speed, under a combination of ballast and full loads.

2.4 The behavior of ships with bulbous bows in waves

Much of the research into the effects of bulbs has been devoted to resistance and powering aspects. The effects on sea-going qualities must also be investigated before the decision is taken to apply a bulb for any particular case.

The first effort to determine the performance in waves of a ship fitted with a bulbous bow was made by Dillon and Lewis [10]. Four systematically-related passenger ship models having bulbous bows ranging from 0 to 13.5% of the midship area were tested both in calm water and waves. The tests showed a substantial reduction in resistance in calm water above $Fn = 0.245$ and a small effect of bulb size on speed and motions in head seas. Therefore, it was concluded that the design of the bulbous bows can be performed on the basis of calm water considerations alone.

In 1965, Wahab [8] conducted tests on a model of a 500 feet cargo liner in regular and irregular head seas. The model was tested both without a bulb as well as with a spherical bulb with a radius of 2% of the ship's length. It was concluded that reduction in pitch and in relative motions of the bow are obtained with the bulb up to a wave length which depends on the ship's speed. Nevertheless, it was also shown that the advantage of the bulb vanishes in bad weather (i.e. at sea state 8 and above).

Van Lammeren and Pangalila [11] tested the model of a 24,000 DWT bulk carrier in irregular seas with a conventional bow and with a 9% bulb attached in the bow. Negligible differences in pitch motions and in bending moments were found after measurements for both cases. However, in the ballast condition and for sea state 6 the model with the bulbous bow still required less power to attain speeds above 13 knots. Moreover, the bulb reduced the relative motions of the bow.

In 1970, Smith and Salvesen [12] investigated the accuracy of the Korvin-Kroukovski strip theory for destroyer hull forms with bulbous bows. They concluded that, with sufficiently accurate section representation, the strip theory can be used to predict head-seas motions not only for regular hull forms, but also for ships with bulbous bows and sonar devices in small amplitude waves.

2.5 Applications of bulbous bows on ships

2.5.1 Applications on big tankers and bulk carriers

Large bulbs are now commonly fitted to big tankers and bulk carriers running at low Fn values, at which the wavemaking resistance is relatively small. Reductions in resistance of approximately 5% in full load and 15% in the ballast condition have been obtained in model tests. These results are also confirmed in full scale trials. Such gains are apparently possible on ships with block coefficients around 0.80 and at Fn values of about 0.18 . It is significant that the most substantial improvements are found in the ballast condition when the bulb is near the free surface.

Newport News Shipbuilding performed studies [13] to determine the economic and hydrodynamic effects of alternative bow configurations on a representative modern, high-block tanker. A computational fluid dynamics software (SLAW) was used in order to mathematically analyze several candidate bows. These designs were then model tested to validate the results of the code. The powering results obtained from the model testing confirmed that the initial predictions made using the code were correct. For the same cruising speed of 15.5 knots a cylindrical bulb attached to the bow resulted in a reduction to total resistance of approximately 3.5%, while the second best result (a 2% reduction of total resistance) was achieved by a 'producible' bulb candidate. The latter kind of bulb was a long, thin bulb, which had a simpler form than the cylindrical one in order to reduce the complexity and construction costs.

In 1994 an existing tanker hull form and slight modifications of this were extensively tested at MARIN [14]. The modifications comprised a lengthening of the parallel midbody, a shortening of the bulbous bow length and a movement of the rudder location aft, while further one additional bow thruster opening (three instead of two), a bottom cargo system opening and one additional stern thruster opening (two instead of one) were fitted on the existing ship model.

This design problem was efficiently solved by using mathematical tools. A potential flow calculation carried out with MARIN's DAWSON code helped the design team to make the modifications of the hull form in such a way that the contractual speed could be predicted. The results of the subsequent model tests were in line with the high expectations based on the potential flow calculations and the contractual speed was achieved.

The major conclusion drawn is that without this CFD code these design problems would not have been solved so easily and so quickly.

2.5.2 Applications on fishing boats

Trawlers run at high values of Fn (0.30 to 0.37) and have large wavemaking resistance. These are conditions which should be favorable to the use of bulbous bows and this have been confirmed by model experiments. In the U.S. several bulbous bow installations have been included in the conversion of West Coast crabbers to trawlers.

Doust [15] conducted tests with the models of two long distance trawlers, differing only in that one of them had a bulbous bow. Two propellers were tested with each form, one suitable for free-running and the other for trawling. Doust concluded that overall reductions in power of the order of 10-15 % can be obtained, due to reduction in resistance and increased propeller efficiency. Furthermore, tests performed in regular waves indicated that the bulbous bow ship suffered a smaller speed reduction over the working speed range than the conventional bow ship did.

Heliotis [16] studied the effect of bow bulbs on trawler forms similar to the ones used in New England. The conclusion from this study was that the introduction of a cylindrical bulbous bow can reduce the total resistance of trawlers up to 20%. Furthermore, from the seakeeping tests the bulbous bow showed an advantageous effect in reducing the pitching motion and the vertical bow acceleration at cruising speed and for wavelengths up to $\lambda/L = 2$.

2.5.3 Applications on high speed ships

To date, the only full-scale applications of large bulbous bows to high-speed vessels are those found on naval ships (such as the Italian frigate Maestrale).

A problem that has arisen in high-speed ships with bulbs is the occurrence of cavitation on the bulb surface, resulting in erosion and noise. Calculations should be made in order to ensure that the curvature is nowhere sharp enough to cause cavitation. Special attention should be paid to smoothing off weld beads and other roughnesses in this area.

A methodology for designing bulbous bows for high-speed, fine-form ships was proposed in 1984 by J.W. Hoyle, B.H. Cheng and others [17]. This study was performed using the FFG-7 class of naval frigates as the reference hull form. Nine variations in bulb design plus the bulbless hull form were analyzed using numerical tools. The hydrodynamic performance of the candidate bulbs was predicted by two computer programs. First, the XYZ Free Surface Program was used to assess the calm water resistance characteristics of the FFG-7 configured with and without bulb forms. Then, the Navy Standard Ship Motions Program (SMP) was used to predict their seakeeping performance.

Five of the bulb variations were appended to a model of the FFG-7 and tested in the towing tank at the U.S. Naval Academy. The most interesting conclusion from this study was that the results from the computer predictions and the calm water towing tank tests showed remarkably similar trends, while the relative rankings of the bulb forms were identical. In general, the resistance advantages from adding a bulbous bow to the FFG-7 hull form seemed to increase with increasing bulb volume. Furthermore, the addition of a bulbous bow to the FFG-7 hull form appeared to only marginally degrade the ship's seakeeping characteristics. Although the O-type bulb form has not been investigated extensively (from the nine different designs only one very small bulb was of this type), the authors of this paper note the superior performance of this type of bulb. They also recommend the future study of the effect of variations on the O-type bulb form.

Chapter 3

Geometry of bulbs

3.1 Hull form

The original hull form of TGC-770 was modified in order to create several hull variations with bulbous bow . The modifications consisted of applying different bow bulbs to the basic form. The main dimensions and form coefficients of TGC-770 are given in the following table :

Length on WL (m)	229.0
Breadth max. on WL (m)	35.37
Maximum Draught (m)	10.00
Displacement (m^3)	29,080
Wetted surface (m^2)	8,878
Block coefficient	0.3713
VCG (m)	17.0
Rx about CG (m)	14.0
Ry about CG (m)	67.2
Rz about CG (m)	67.2

Table 3-1 : TGC-770 main dimensions and form coefficients

3.2 Bulb selection

It was decided that the bulbs to be tested would be circular cylinders with a hemispheric nose. This form was chosen because it is the simplest one and the easiest to be implemented by a shipyard. Furthermore, most bulbs incorporated in original ship designs are of that form.

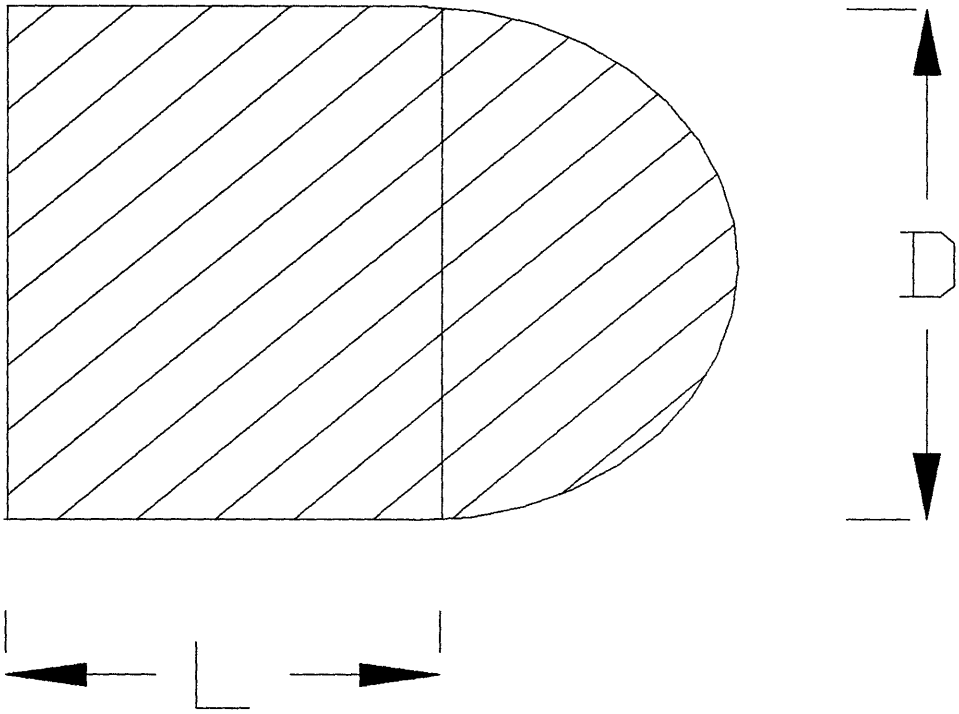

Figure 3-1 : Bulb's geometry

As it is shown in Figure 3-1, a circular cylinder of length L and diameter D attaches the hemispheric nose of diameter D to the bow of the ship. In order to fair the bulb into the rest of the hull a computer program (Autoship) was used. A short description of the methodology applied to fair the bulbs is given in the following chapter.

The following parameters had to be specified for each bulb to be tested :

1. Vertical location

Two conditions had to be specified for the vertical location of the bulbs. First, the bulbs had to be fully submerged and second they should not extend beneath the baseline, so that no additional precautions will have to be taken during the dry-docking. For the largest bulbs, there was practically only one position that satisfied both conditions. The smaller diameter bulbs, that were tested, were located as deeply as possible. In all cases, they were kept parallel to the water line.

2. Bulb diameter

Since all the existing design methods presented in the previous chapter have concentrated primarily on low speed, full form ships, it was decided to test seven different diameters of bulbs in order to cover all the realistically possible range of sizes and investigate the effect of bulb's diameter in resistance and seakeeping.

3. Bulb length

For one of the smallest bulbs (diameter 2.5 meters) six variants of different bulb length were tested and for the largest bulb (diameter 7.0 meters) two variants with different bulb length were also tested.

Applying the above guidelines thirteen TGC-770 bulb variations were produced and were named variant #1 - #13 (variant #0 was named the original TGC-770 hull). The bulb diameter (D) and length (L) for each variant are given in the following table :

VARIANT #	D (m)	L (m)
1	2.0	0
2	2.5	0
3	3.0	0
4	4.0	0
5	5.0	0
6	6.0	0
7	7.0	0
8	2.5	1.0
9	2.5	2.0
10	2.5	3.0
11	2.5	4.0
12	2.5	5.0
13	7.0	10.0

Table 3-2 : Variants bulb parameters

Figure 3-2 presents the original hull geometry of TGC-770 and figures 3-3 - 3-15 the thirteen variants' hull geometry.

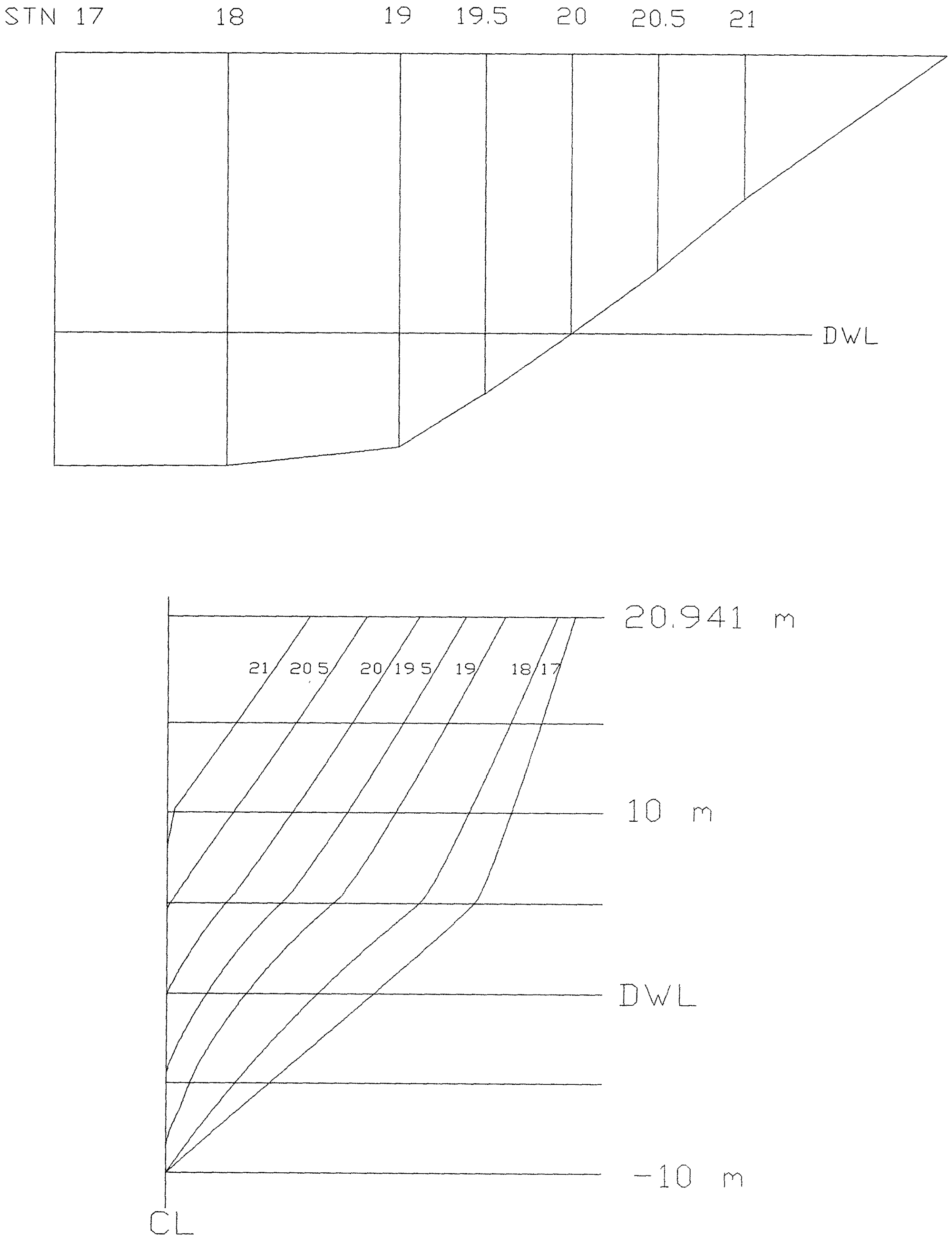

Figure 3-2 : TGC-770 hull geometry

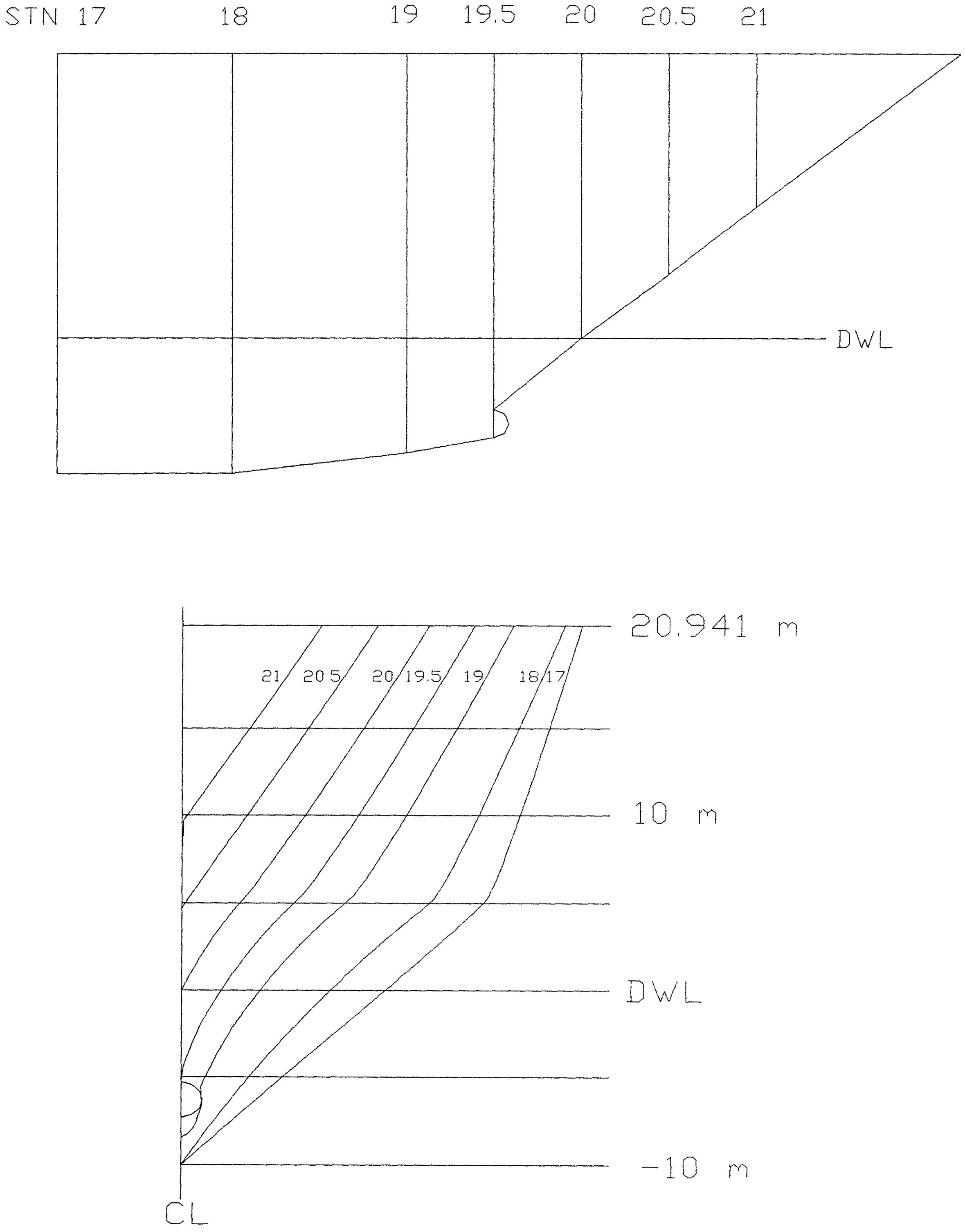

Figure 3-3 : Variant #1 hull geometry

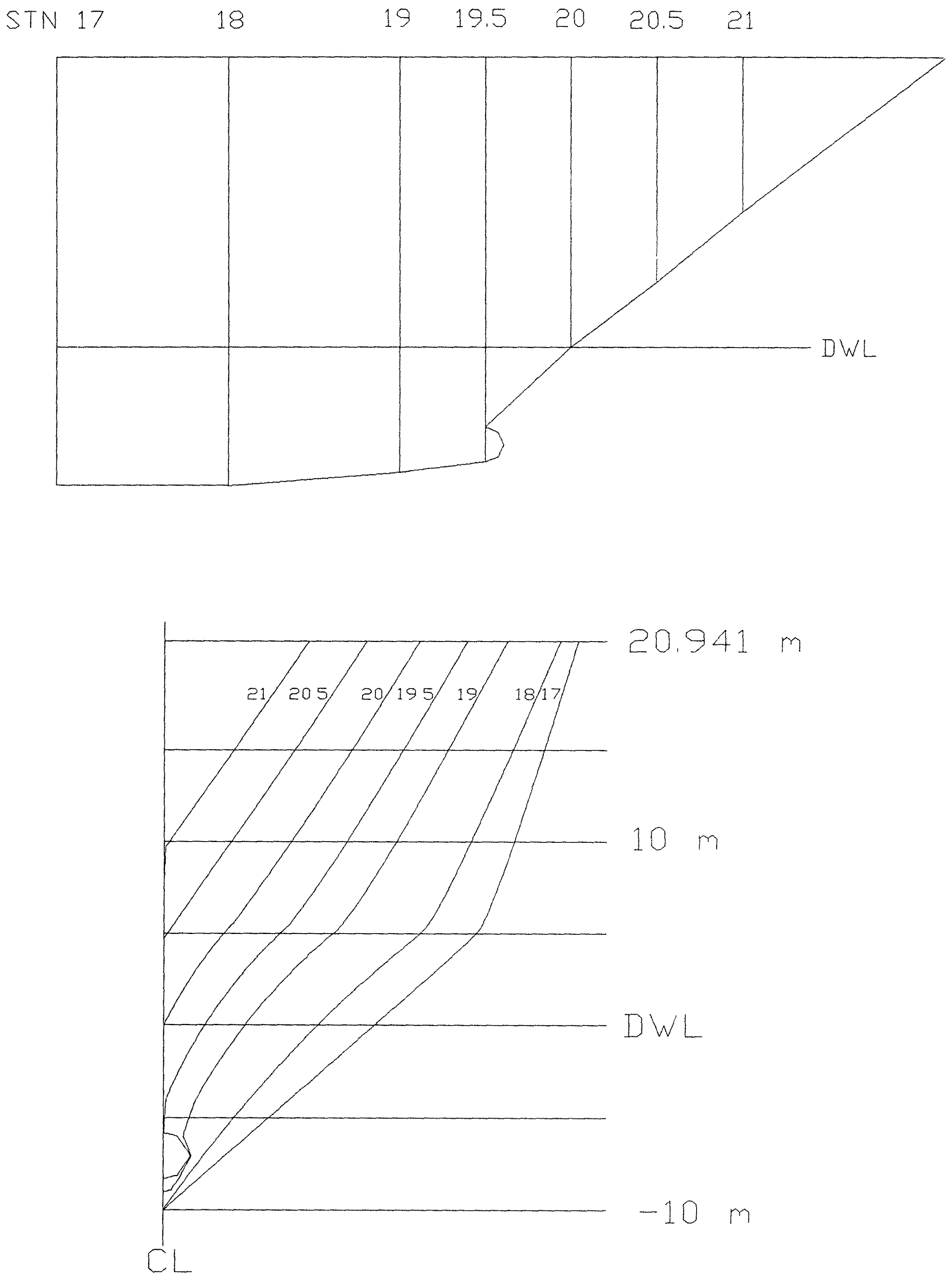

Figure 3-4 : Variant #2 hull geometry

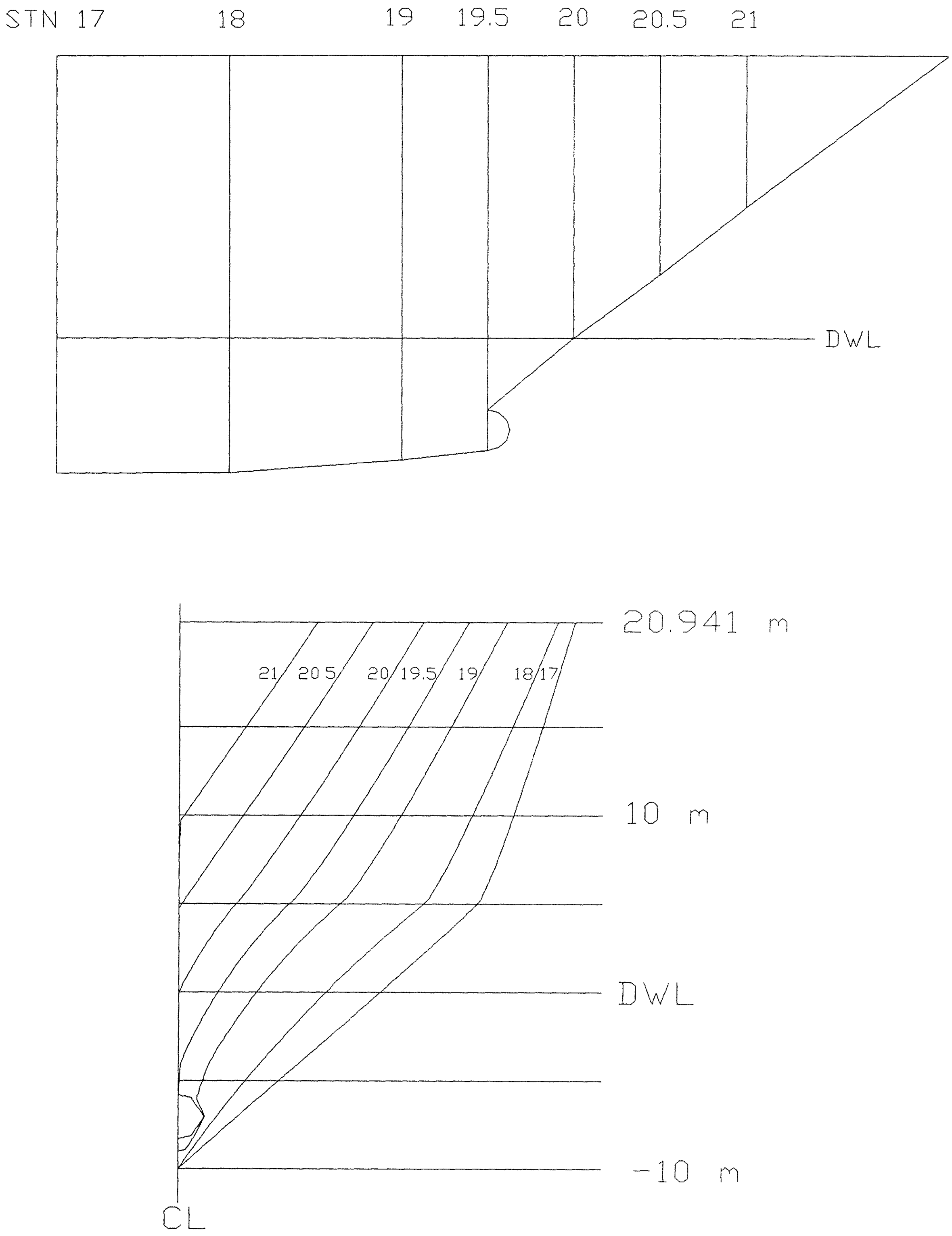

Figure 3-5 : Variant #3 hull geometry

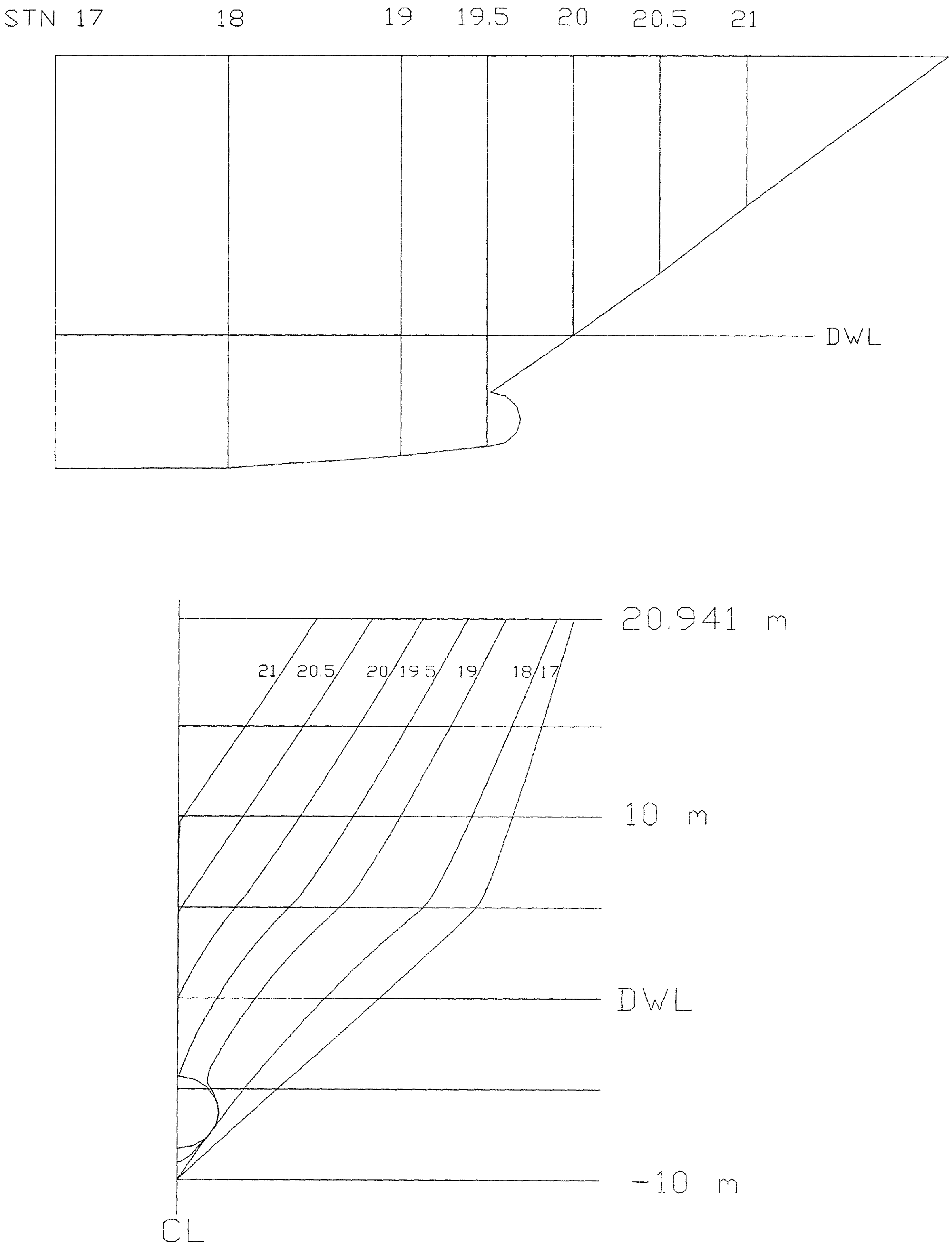

Figure 3-6 : Variant # 4 hull geometry

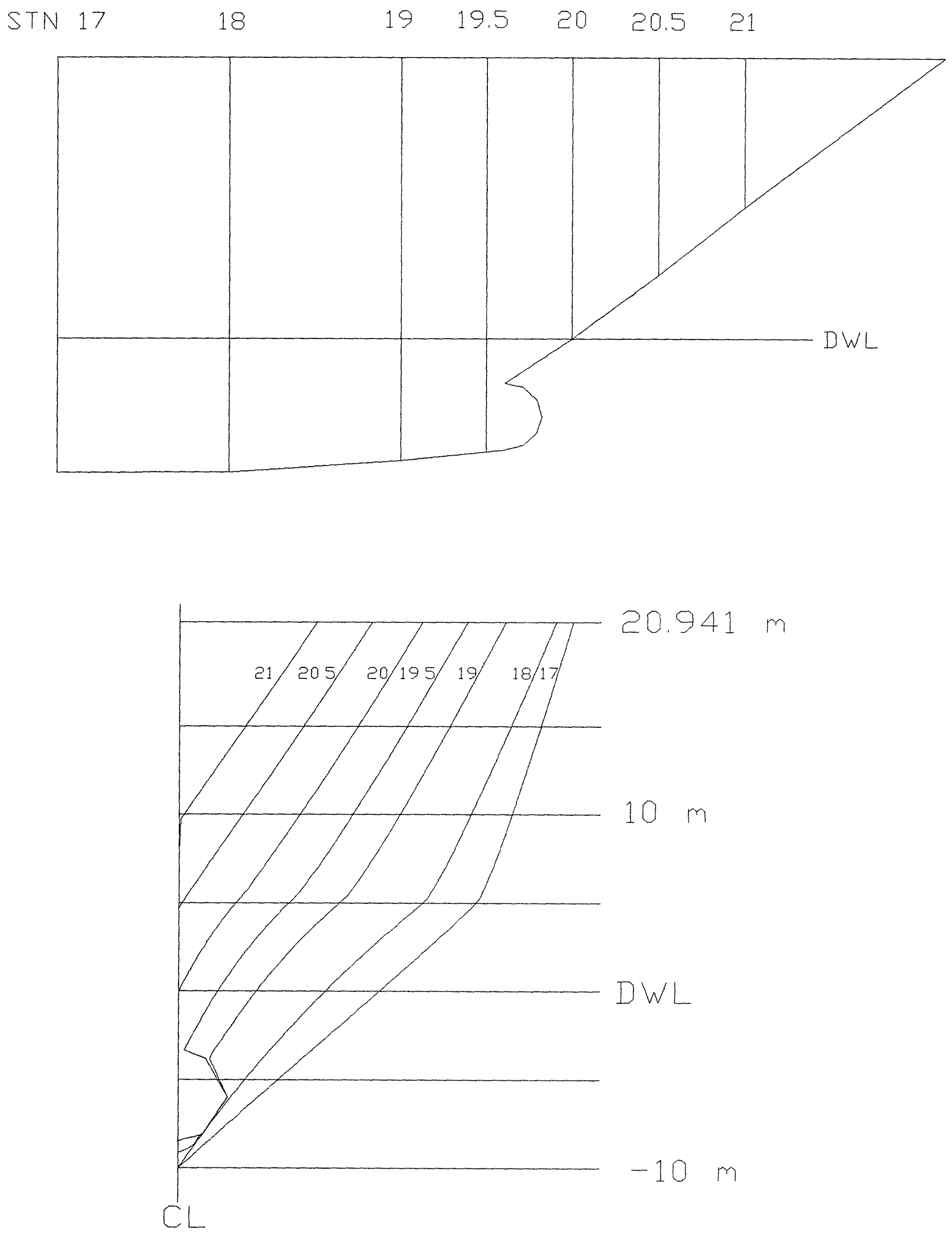

Figure 3-7 : Variant # 5 hull geometry

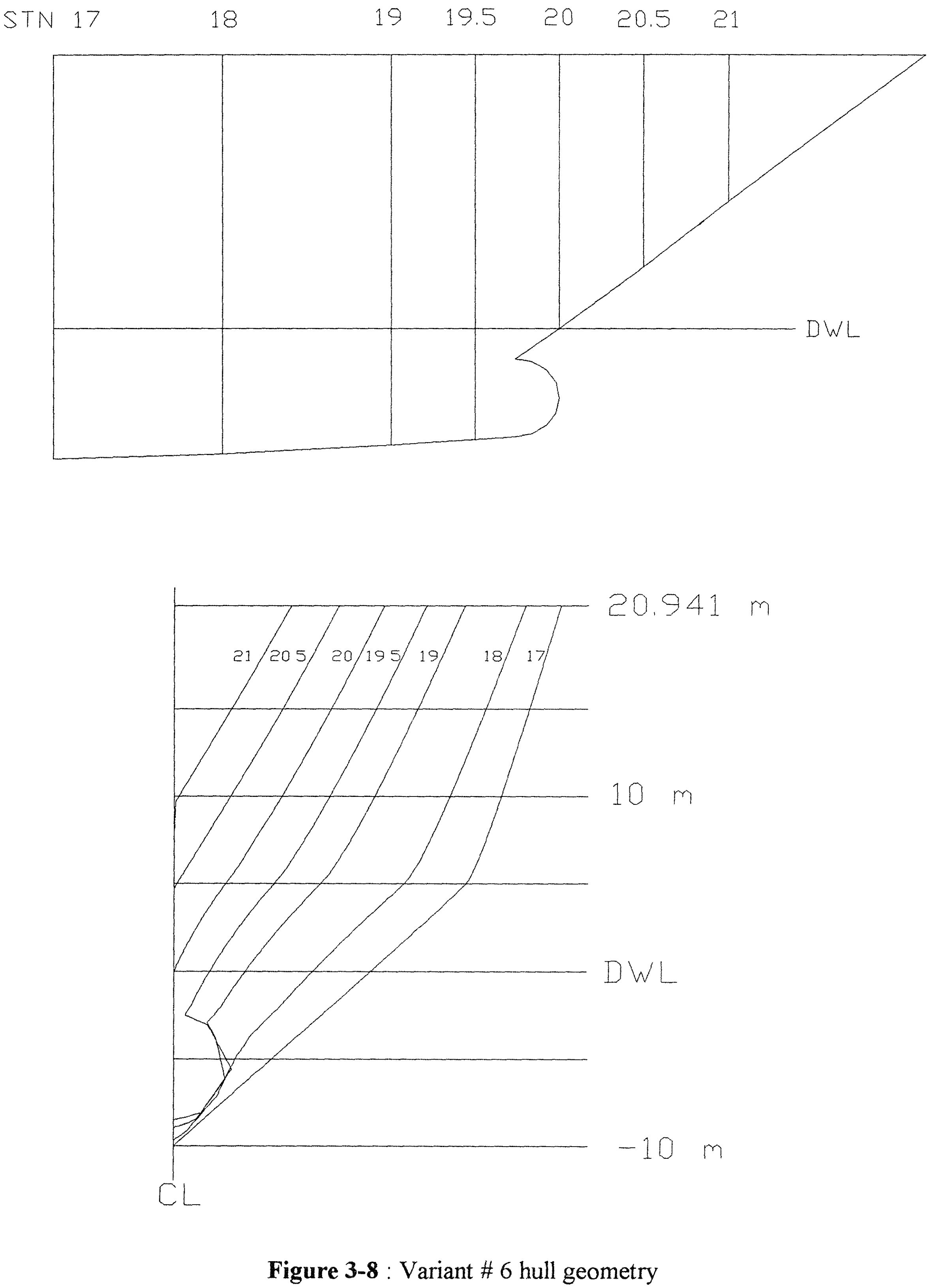

Figure 3-8 : Variant # 6 hull geometry

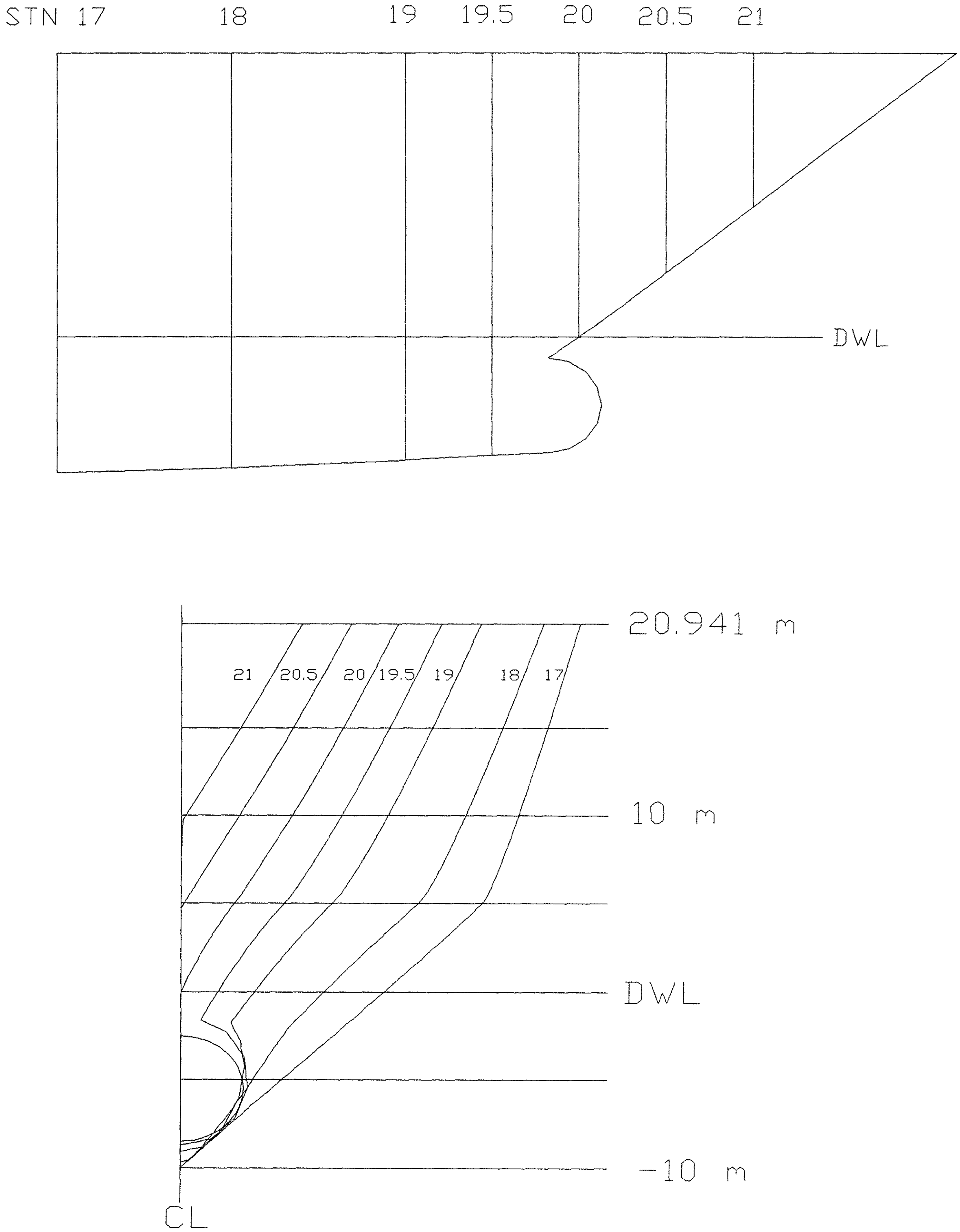

Figure 3-9 : Variant # 7 hull geometry

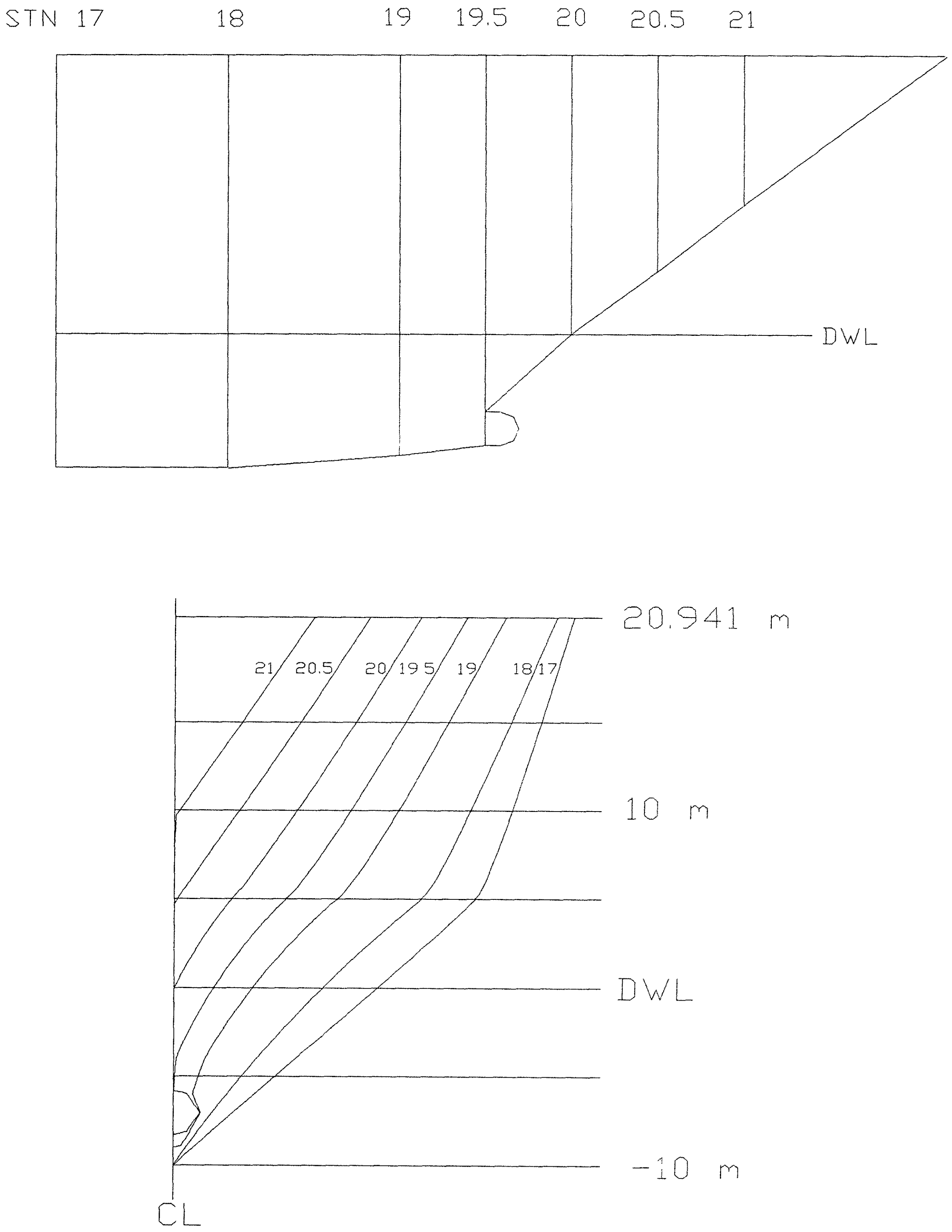

Figure 3-10 : Variant # 8 hull geometry

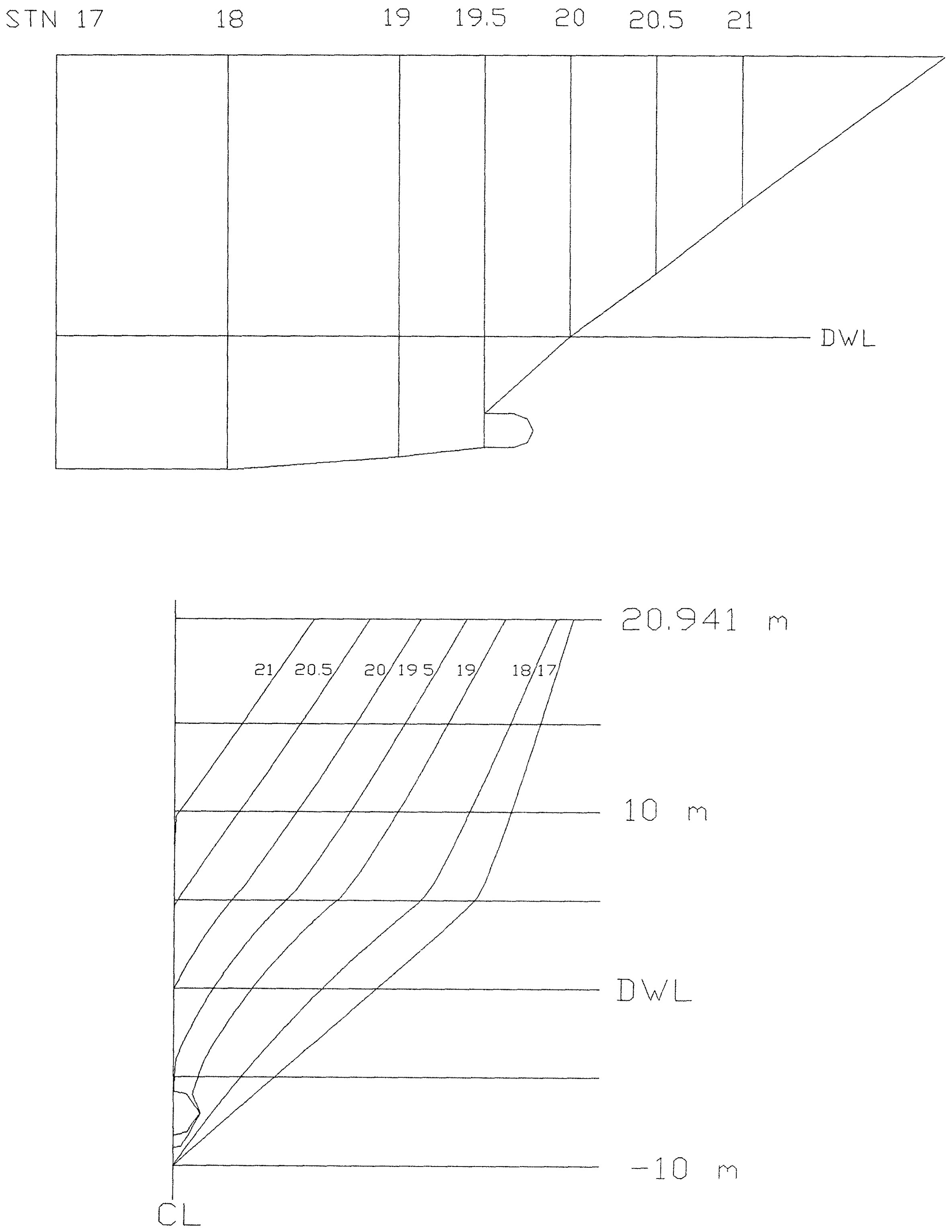

Figure 3-11 : Variant # 9 hull geometry

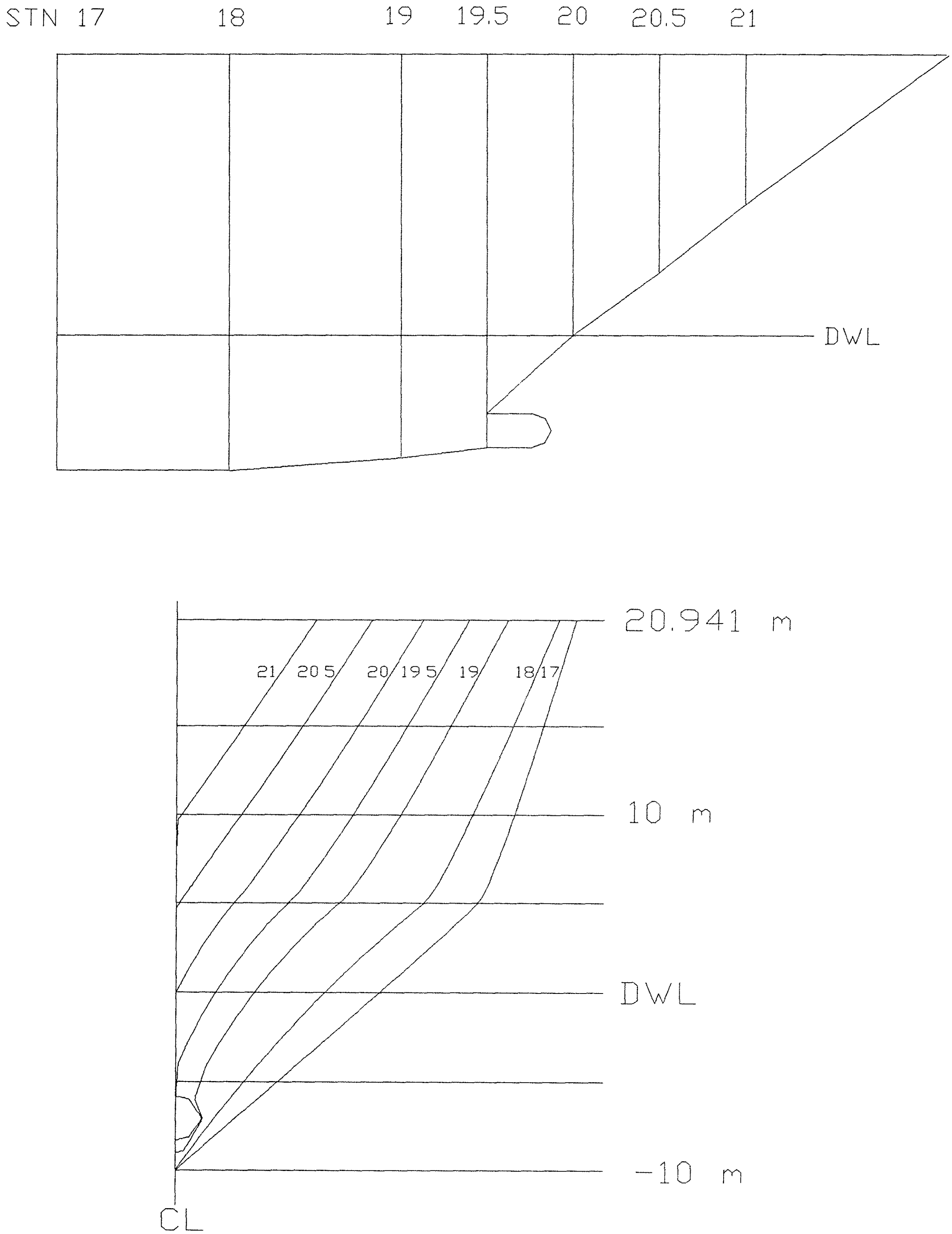

Figure 3-12 : Variant # 10 hull geometry

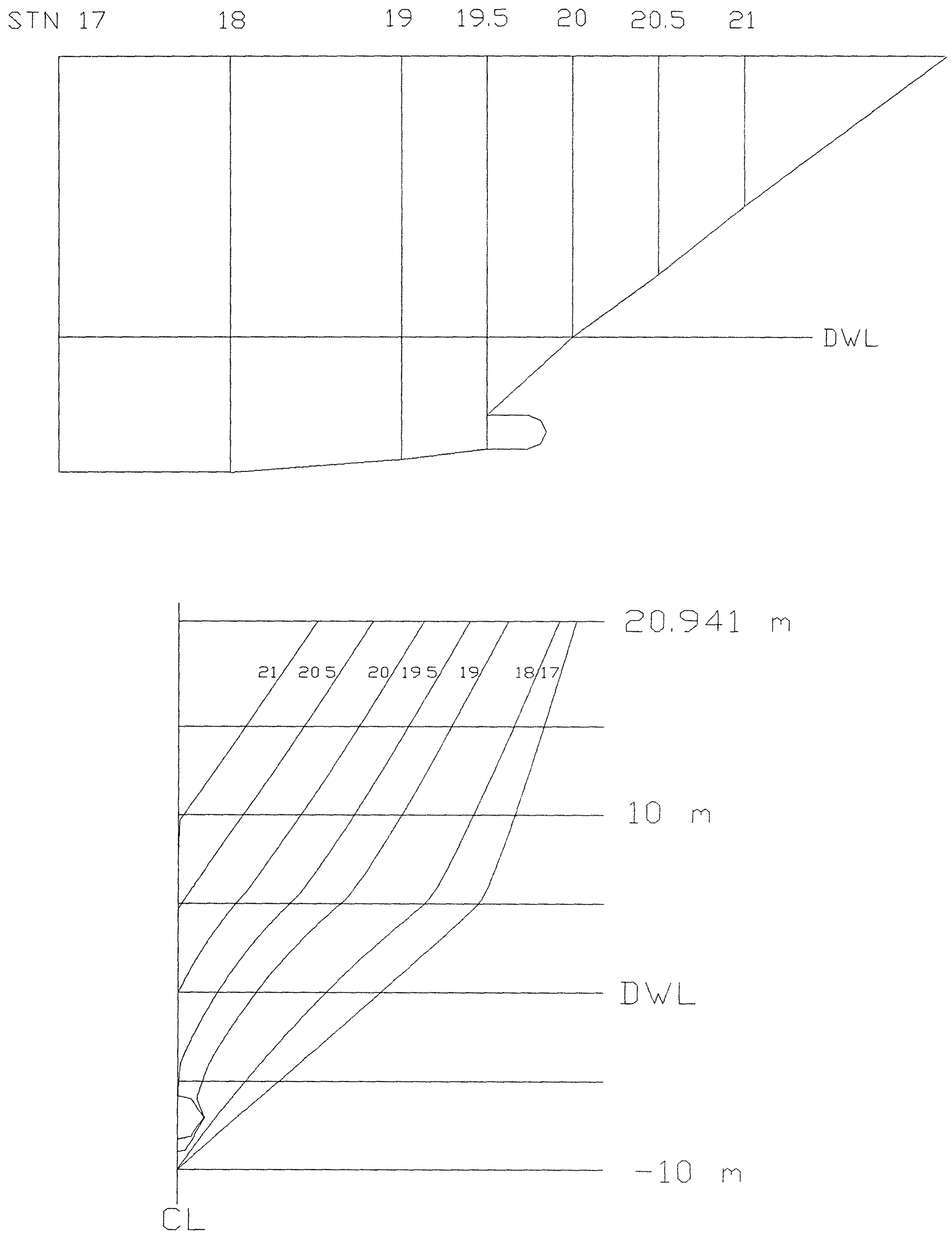

Figure 3-13 : Variant # 11 hull geometry

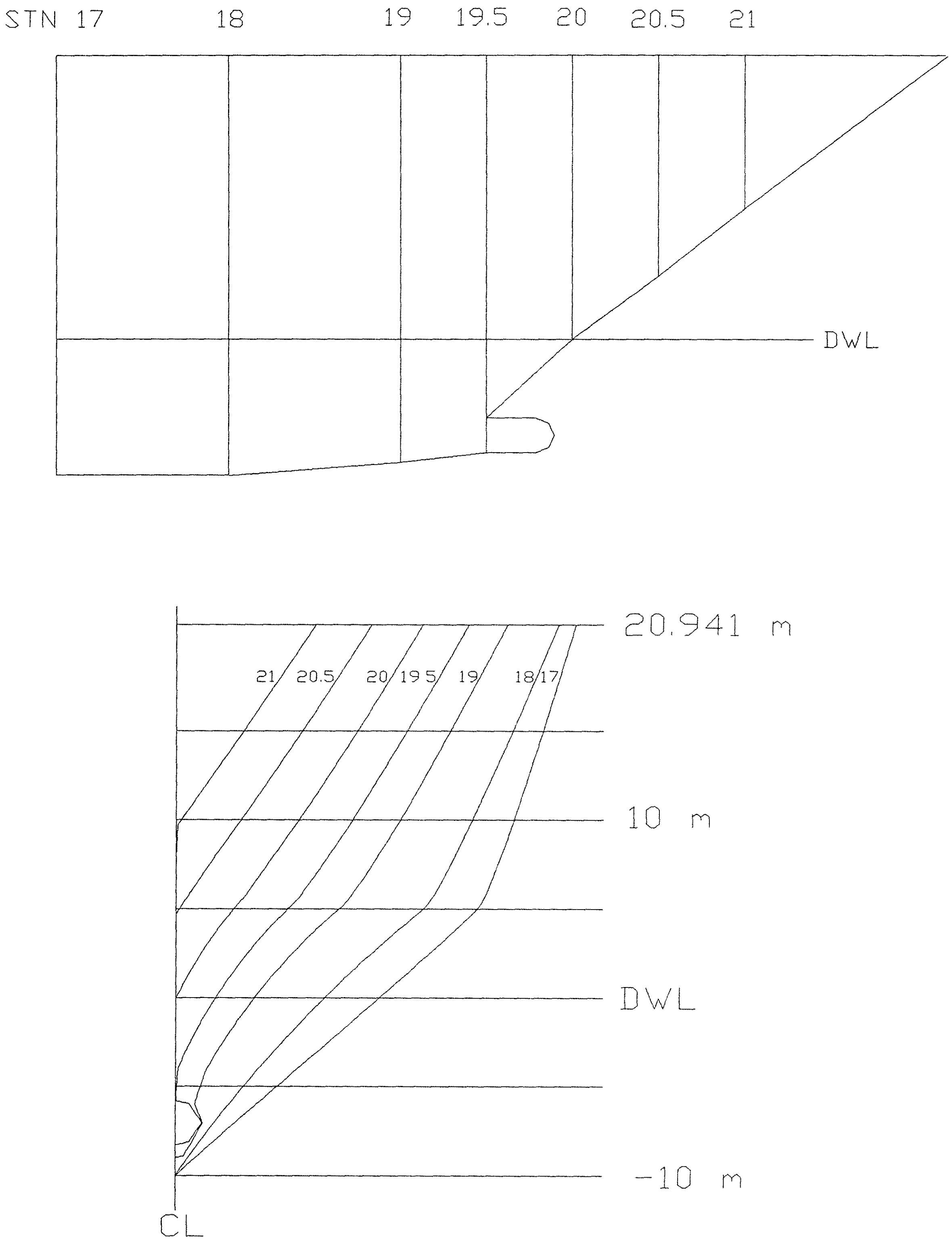

Figure 3-14 : Variant # 12 hull geometry

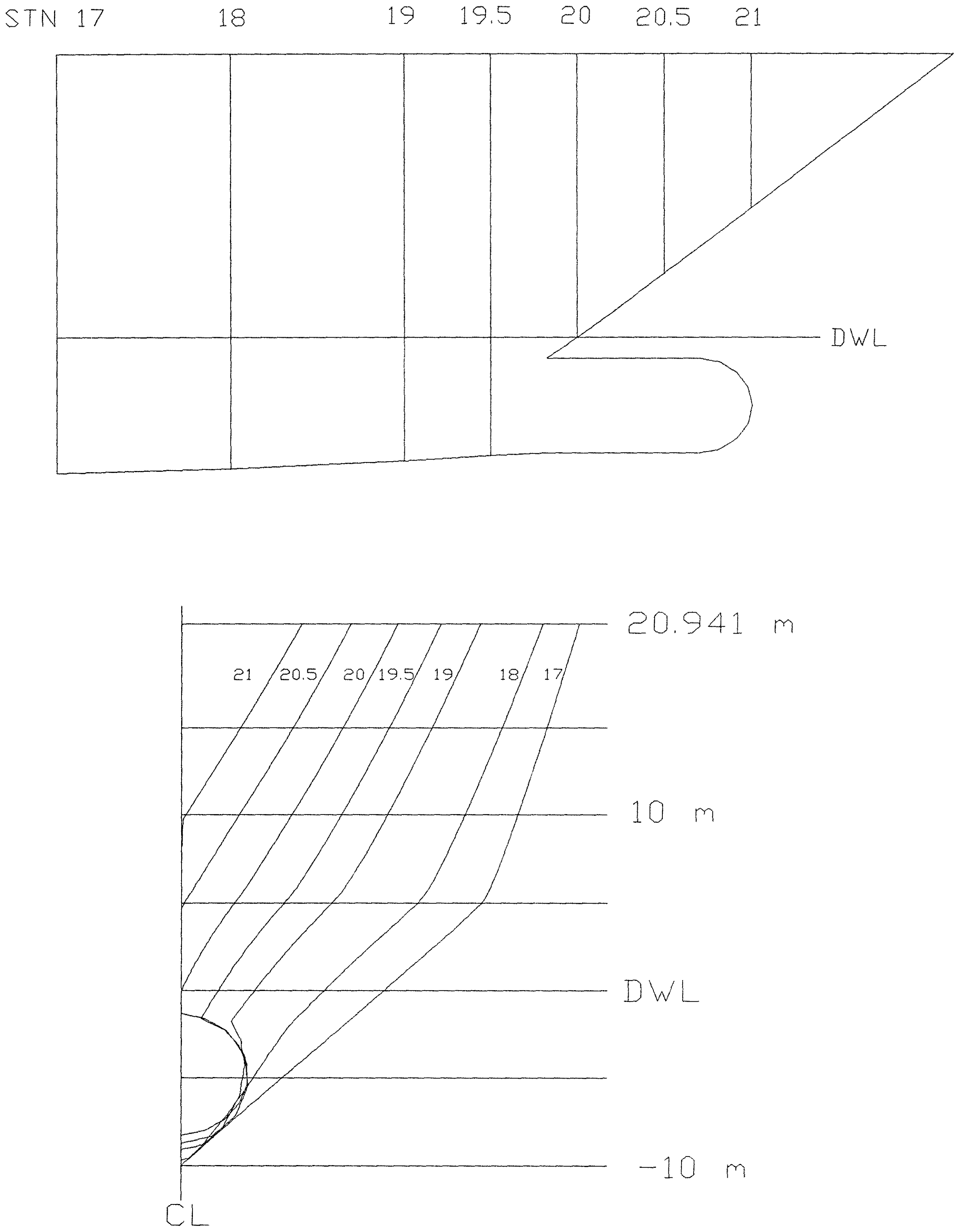

Figure 3-15 : Variant # 13 hull geometry

Chapter 4

Computer programs

4.1 Introduction

Two computer programs were utilized :

- Autoship was used to design and fair the bulbs into the rest of the hull and finally produce the offsets of each variant's underwater hull form.

- SWAN-1 (Ship Wave Analysis) was run to predict the calm water resistance characteristics and also the seakeeping performance of the TGC-770 configured with and without bulb forms.

An overview of the operation of these two programs is presented here. A more detailed description of the computer programs and their operation is given in references [18] and [19] .

4.2 Autoship

Perhaps the most important disadvantage of all bulbous bow design methodologies is that they fail to provide a means for fairing the bulb into the rest of the hull. The integration of the bulb into the ship's hull is left entirely to the designer's discretion. One useful computer tool that has been utilized in this study in order to design the bulbous bows of the thirteen variants is Autoship.

By introducing the original hull form of TGC-770 to Autoship, it was relatively easy to design the thirteen bulbous bow variants and fair the bulbs into the rest of the hull. In order to design each variant the following procedure was followed :

- First, the original hull form was modified in the bow stem depending on each bulb's parameters (diameter D, length L and vertical location).

- Then, each variant was tested for fairness. The 'Surface Normal Curvature' feature of Autoship is a test for fairness. Just a single curve, to be fair, has to have continuous distribution of curvature, whereas fairness of a ship hull requires a continuous distribution of normal curvature along each longitudinal. Checking the normal curvature along a series of longitudinals is a test of fairness that is far more sensitive than looking at the lines by eye, especially with the limitations of raster graphics.
- In addition, each variant was tested for 'buildability' of the hull, assuming the vessel is to be plated with metal. This is performed by Autoship's feature 'Gaussian Curvature'. Zero Gaussian curvature means that a surface is either flat or curves only in one direction. Areas of low Gaussian curvature, which are developable, display in different color on the screen than areas of high Gaussian curvature do. The latter areas are highly curved and require considerable distortion of sheet material in order to conform to the desired hull shape.
- Finally, the faired hull offsets for each variant were produced by Autoship.

Having the hull offsets for each variant from Autoship a computer code in Fortran was used to generate a surface grid of each hull and bulb (Appendix 1). The hull, when appended with a bulb, was subdivided into two sections. The first section consisted of the underwater hull up to the depth where the upper part of the bulb starts. The rest of the hull, which includes the bulb, formed the second section. This separation of the underwater hull renders moderate the production of underwater hull forms with bulbs of different length (L) by just modifying the second section of the hull.

4.3 SWAN (Ship Wave ANalysis)

4.3.1 General description

Computer based simulations of free surface flows past ships and sailing yachts have enjoyed rapid growth in use since the early 80's and in recent years have been firmly established as a versatile and inexpensive design tool at the disposal of the modern naval architect. SWAN is a computer program developed at MIT and has been used for the hydrodynamic analysis and design of several America's Cup entries. It solves the complete three-dimensional free surface flow around ships advancing with a constant forward velocity in calm water and in regular waves. SWAN models the generation, radiation and diffraction of surface waves by the ship hull by enforcing appropriate linearized free surface conditions with variable coefficients on the mean position of the free surface. This computer program is able to compute the localized flow properties inside the fluid domain, over the hull and on the free surface near and far from the ship.

The numerical solution algorithm is based on a Rankine panel method developed for the accurate treatment of forward speed free surface flows over a wide range of speeds and wave frequencies. Panels are distributed on the ship hull and part of the free surface and the appropriate boundary conditions are enforced by a bi-quadratic spline collocation scheme and the application of Green's second identity. A detailed numerical analysis of the properties of this Rankine panel method was shown to introduce no numerical damping and a third order numerical dispersion to the wave disturbance. This property is essential not only for the accurate solution of the free surface flow around the ship but also for the reliable prediction of the far-field wave disturbance which may be advantageously employed in the evaluation of the ship wave resistance by momentum analysis.

The selection of the Rankine panel solution scheme in SWAN was motivated by several factors. It is based on the evaluation of Rankine influence coefficients which are independent of the speed and wave frequency using techniques which have been extensively developed and tested over a period of three decades. The distribution of panels on the free surface allows the enforcement of quasi-linear free surface conditions with variable coefficients. Finally, the use of the Rankine source as the Green function, combined with an iterative method for the solution of the resulting linear systems, leads to the efficient solution of both the calm water wave resistance and seakeeping problems.

4.3.2 Input files

The executable code field needs three input files : the HGD, AGD and FCP files. The executable response reads one additional input file (the RCP file) and a journal file created by field in order to calculate the resistance and seakeeping performance. A short description of the input files follows :

- The Field Control Parameter (FCP) file which contains input control parameters, such as the forward speeds of the ship and the incident wave headings and periods.

- The Hull Geometry Description (HGD) file which describes the hull geometry. The geometry of the hull surface is supplied to SWAN in the form of a mesh of points lying on it. The centerplane is assumed to be a plane of symmetry for the hull, therefore only half the hull surface need to be discretized.

- The Appendage Geometry Description (AGD) file which describes additional rigid surface that may be introduced as separate boundary sheets of the computational domain. All such 'secondary' boundaries are referred to as appendages. The appendages supported by the utilized version of SWAN (version 2.2) should be fully submerged.

- The Response Control Parameter (RCP) file which contains all the user-supplied data needed for the execution of response.

The HGD and AGD files, that were used as an input to SWAN for each variant, were an output of the Fortran code mentioned in the previous section.

4.3.3 Output files

The execution of field produces a single output file which serves as the interface between field and response. The user controls the number of output files by response. The names of the response output files are supplied as control parameters by the RCP file. For this study two output files were required at each execution of response :

- The FMOUT file which contains all forces acting on the hull and the resulting responses of the vessel. A detailed label including the overall characteristics of the hull geometry as well as the size and density of the computational grid is printed in the beginning of the file.
- The WPOUT file which contains the detailed flow solution over all boundaries of the computational domain. The wave elevation is printed over the free surface and the free surface wake, while the pressure field is printed over all solid boundaries.

Chapter 5

Resistance and seakeeping results

5.1 Introduction

This chapter presents the hydrodynamic analysis carried out for the original TGC-770 hull form and the variants with bulbous bows, with the code SWAN. This vessel is intended for operation in the waters of North Atlantic, consequently its hydrodynamic performance was carried out in a typical severe North Atlantic sea state at the service speed of 40 knots.

The TGC-770 is a patented ship design developed to achieve and maintain a speed of 40 knots in severe North Atlantic sea states. The hydrodynamic analysis presented in this chapter was carried out for all the hulls cruising at a speed of 40 knots. For all computations in irregular seas the sea spectrum was selected to be a Pierson Moskowitz stationary sea spectrum with mean zero upcrossing period of $T_z = 10$ seconds and significant wave height $H_{1/3} = 6$ meters. Only head waves ($\beta = 180^\circ$) were considered.

The SWAN computations were conducted along the following general lines. A calibration of the computational method was first carried out for the supplied TGC-770 loading condition. A mesh of panels is set up over the hull and the free surface and following several iterative executions of the code numerical convergence is achieved for all quantities under study. This allows the removal of discretization error from the SWAN computations, an essential prerequisite for the runs reported in the following sections of this chapter.

A computation was first carried out for the steady flow around the vessel advancing at 40 knots in order to determine the hull sinkage and trim. With the final sinkage and trim of each hull at calm water, wave making resistance computations were carried out for all thirteen variants with bulbous bows as well as for the original TGC-770 hull (steady flow computations). In addition, numerical computations were carried out for seven of the variants (variants #1- #7) and the TGC-770 hull form for the heave and pitch motions and the added resistance in regular monochromatic waves over a broad range of frequency in head waves.

Figure 5-1 illustrates the hull and free surface discretization around the TGC-770 and in Figure 5-2 a convergent computation is shown of the steady wave pattern of the TGC-770 advancing at 40 knots.

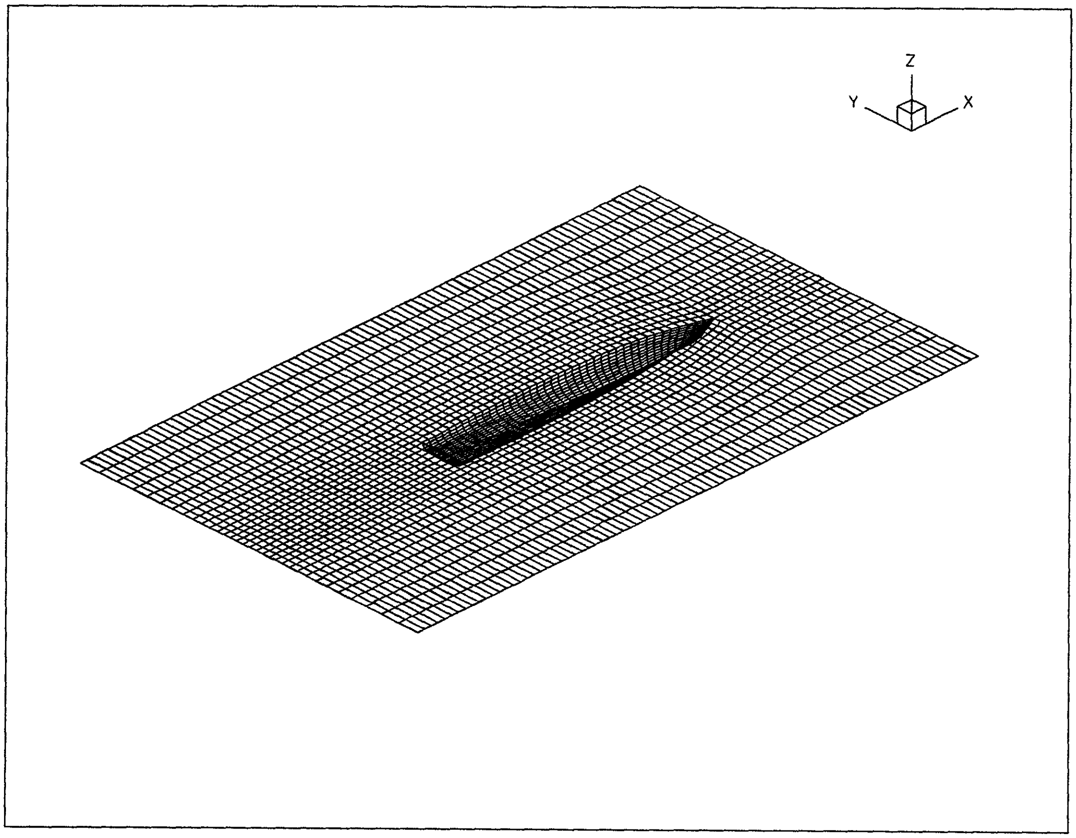

Figure 5-1 : SWAN's computational grid for TGC-770

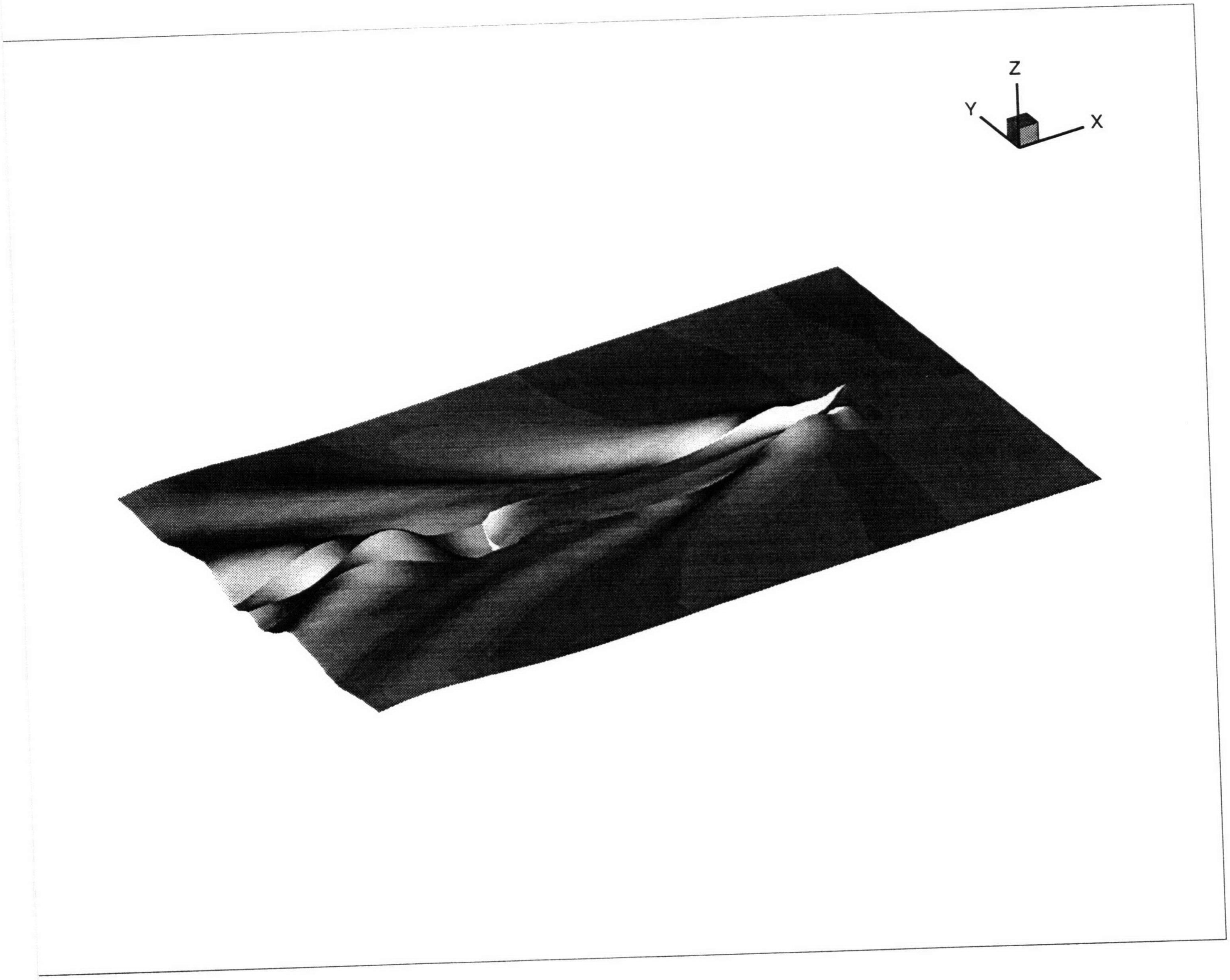

Figure 5-2 : Steady wave pattern for TGC-770 at 40 knots

5.2 Calm water resistance results

5.2.1 Residuary resistance

The SWAN-1 code was primarily used to evaluate the resistance performance of the thirteen variants with bulbous bow and the original hull of TGC-770 cruising at the service speed of 40 knots (Fr = 0.434) . SWAN computed the wave resistance, based on the integration of surface pressure on the hull and convergence tests were carried out to establish the insensitivity of the wave resistance to the number of panels used. These computations were done for each hull at the sinkage and trim calculated by the code.

After wave resistance predictions were made, the residuary resistance coefficients (C_R) were obtained by adding an estimated induced drag coefficient to the wave resistance coefficient (C_{WM}) that SWAN calculated. The induced drag coefficient was estimated by relating the SWAN's result for the original TGC-770 hull to a corresponding model test result given in reference [26].

5.2.2 Frictional resistance

The frictional resistance coefficient for the hull of each variant was obtained from the following empirical expression known as ITTC 57 :

$$C_{fo} = \frac{0.075}{(\log_{10}\mathrm{Re} - 2.0)^2} \qquad (5\text{-}1)$$

This frictional resistance coefficient represents the frictional resistance coefficient of a flat plate. The ratio between the real frictional drag ($C_{f,real}$)and the flat plate frictional drag (C_{fo}) defines the form coefficient (k) :

$$1 + k = \frac{C_{f,real}}{C_{fo}} \qquad (5\text{-}2)$$

This difference between the real frictional drag and the flat plate frictional drag is partly due to the curvature of the hull. This curvature affects the pressure distribution along the length, causing the velocity to change. Using the code Tubola [27] which computes the evolution of a turbulent boundary layer over a two dimensional convex or concave section by using the Lag-Entrainement method of Green, Weeks and Brooman, the form coefficients for each bulb were calculated. The geometric modeling of each bulb was made by assuming a hemisphere attached to a semi-infinite cylinder. The rest of the hull for each of the thirteen variants as well as the total hull of the original TGC-770 were assumed to have a form factor $k_{wh} = 0.12$ (a typical form factor for ships as mentioned in reference [24]). The results from the runs of this code are shown in the following Table 5-1.

The form factors for hemispheric bulbs that were calculated by the code Tubola are negative. This is due to the fact that as the flow passes the hemispheric bulb's nose it meets a negative pressure gradient. Therefore, the boundary layer that is formed is smaller than that of a flat plate of the same surface and so the frictional resistance does.

D (m)	k_b
2.0	- 0.2793
2.5	- 0.2859
3.0	- 0.2913
4.0	- 0.2994
5.0	- 0.3055
6.0	- 0.3103
7.0	- 0.3143

Table 5-1 : Form factors for hemispheric bulbs at U = 40 knots (results from code Tubola)

Finally, the frictional resistance for each variant was calculated using the following formula :

$$R_F = 0.5 \cdot \rho \cdot U^2 \cdot [S_{wh} \cdot (1 + k_{wh}) + S_{wb} \cdot (1 + k_{wb})] \cdot C_{fo} \qquad (5\text{-}3)$$

where

ρ is the density of salt water (= 1,024 kg/m^3)

U is the ship's speed (m/sec)

S_{wh} is the underwater hull (minus the attached cylindrical bulb) wetted surface (m^2)

S_{wb} is the bulb's wetted surface (m^2)

5.2.3 Total calm water resistance

An estimate of the total calm water resistance was obtained by adding the total frictional resistance to the residuary resistance. The results for all the variants are shown in Table 5-2.

HULL	Swh (m^2)	Swb (m^2)	Sw (m^2)	Cwm	CR	CF	Kbh	Rt (kN)
TGC770	8878	0	8878	1,99E-03	3,30E-03	1,76E-03	0,00E+00	10073
# 1	8878	6	8885	1,94E-03	3,25E-03	1,76E-03	-2,79E-01	9984
# 2	8878	10	8888	1,93E-03	3,24E-03	1,76E-03	-2,86E-01	9969
# 3	8878	14	8892	1,90E-03	3,21E-03	1,76E-03	-2,91E-01	9915
# 4	8878	25	8903	1,76E-03	3,07E-03	1,76E-03	-2,99E-01	9658
# 5	8878	39	8918	1,70E-03	3,01E-03	1,76E-03	-3,06E-01	9555
# 6	8983	57	9040	1,45E-03	2,76E-03	1,76E-03	-3,10E-01	9197
# 7	8983	77	9060	1,30E-03	2,61E-03	1,76E-03	-3,14E-01	8922
# 8	8878	18	8896	1,93E-03	3,24E-03	1,76E-03	-3,14E-01	9976
# 9	8878	26	8904	1,94E-03	3,25E-03	1,76E-03	-3,14E-01	10003
# 10	8878	33	8912	1,94E-03	3,25E-03	1,76E-03	-3,14E-01	10010
# 11	8878	41	8920	1,95E-03	3,26E-03	1,76E-03	-3,14E-01	10037
# 12	8878	49	8927	1,96E-03	3,27E-03	1,76E-03	-3,14E-01	10064
# 13	8983	231	9214	1,72E-03	3,03E-03	1,76E-03	-3,14E-01	9881

Table 5-2 : Total calm water resistance calculations

All the thirteen variants are estimated to have less total calm water resistance than the TGC-770. From the results it is very clear that the increase of the bulb's length (L) for a given bulb diameter (D) increases the total calm water resistance. Variants #2, 8, 9, 10, 11 and 12 were designed to have the same bulb diameter (D = 2.5 meters) with different bulb length (L = 0, 1, 2, 3, 4 and 5 meters). The following figure shows the effect of the bulb's length on the total calm water resistance ratio (this ratio is the total calm water resistance of a variant with bulbous bow divided by the total calm water resistance of TGC-770).

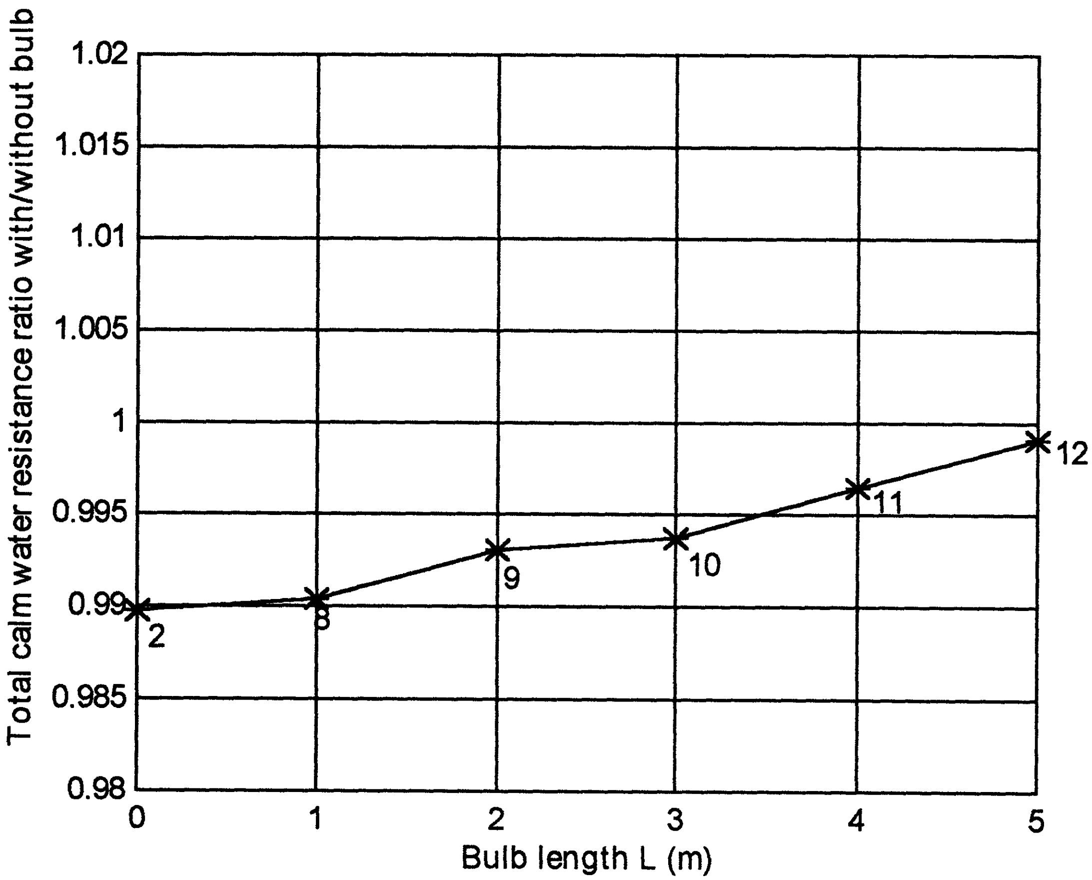

Figure 5-3 : Bulb's length (L) effect on total resistance ratio with\without bulb (Variants #2, 8, 9, 10, 11, 12)

Furthermore, the increase of the bulb's diameter (D) for a given bulb's length (L) decreases the total calm water resistance. Variants #1, 2, 3, 4, 5, 6 and 7 were designed to have the same bulb length (L = 0) with different bulb diameters (D = 2, 2.5, 3, 4, 5, 6 and 7 meters). Figure 5-4 shows the effect of the bulb's diameter on the total calm water resistance ratio with\without bulb.

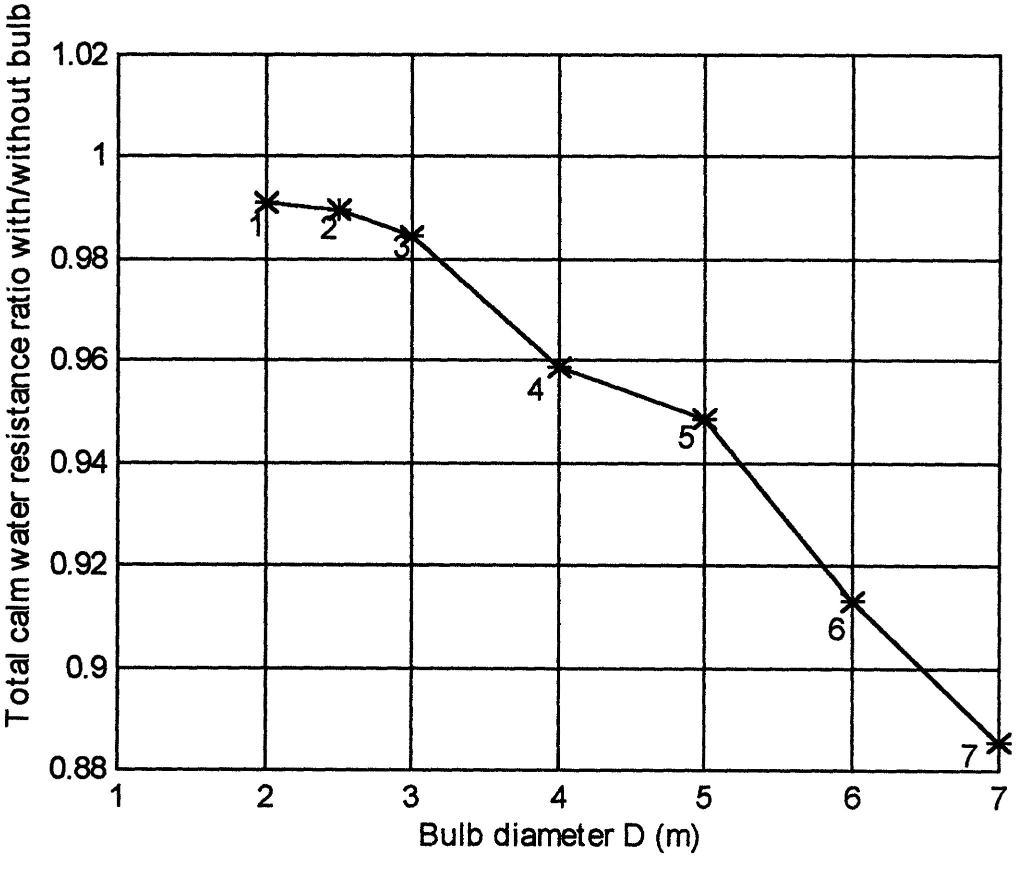

Figure 5-4 : Bulb's diameter (D) effect on total resistance ratio with\without bulb (Variants #1, 2, 3, 4, 5, 6, 7)

From the results of total calm water resistance the best performance was achieved by variant # 7 which is the hull with the largest possible cylindrical bulb (D = 7.0 meters). In order to verify the effect of the bulb's length on the total resistance another variant (variant # 13) with a cylindrical bulb of the same diameter and larger length (L = 10 meters) was produced and tested. The total calm water resistance was again increased with the longer bulb as it can be seen in Table 5-2. A similar bulbous bow hull form to variant #13 was also tested by SSPA Maritime Consulting using the Shipflow code (reference [26]). The reduction of total resistance calculated by the two codes was approximately the same .

5.3 Unsteady flow results

As pointed out in the introduction of this chapter, the computation of the steady flow is essential for the accurate prediction of the seakeeping properties of a ship partly because of its influence upon the ship attitude relative to calm water surface and partly because of the influence of the steady flow velocity upon the unsteady hydrodynamic pressure distribution over the ship hull.

After completing the calm water resistance calculations with SWAN, the same code was used to predict the seakeeping characteristics of the TGC-770 hull form in eight different configurations : bulbless and variants #1 - #7 with bulbs. These seven variants with bulb were chosen among the thirteen because each one of them presented less total calm water resistance for its bulb diameter.

The wave induced motions and added resistance are both amenable to computation by three dimensional panel methods which solve the Laplace equation in the fluid domain while enforcing the proper boundary conditions on the ship's surface, the free surface and at infinity.

5.3.1 Heave and pitch RAO's

Linear theory allows the description of an ambient directional sea state characterized by the spectrum $S(\omega_o, \beta)$ as the superposition of monochromatic and unidirectional wave components of frequency ω_o and heading β. The response of a ship to each wave component will be an oscillatory motion in all six rigid body degrees of freedom at the encounter frequency, defined by :

$$\omega = |\omega_o - U k \cos\beta| \tag{5-4}$$

where k is the wavenumber and is defined from the dispersion relation : $k \tanh(kh) = \frac{\omega_o^2}{g}$

Therefore, the motions of the ship will be time-harmonic of the following form :

$$\xi_i(t) = \mathrm{Re}(\Xi_i e^{i\omega t}) \tag{5-5}$$

where Ξ_i are the complex amplitudes of the motions which determine their magnitude and phase relative to the elevation of the incident wave component.

The complex quantities Ξ_i are determined from the solution of a 6 x 6 coupled system of equations obtained from the linearization of Newton's law. This system has the following form :

$$\sum_j [-\omega^2(\mathrm{M}_{ij}+\mathrm{A}_{ij})+i\omega\,\mathrm{B}_{ij}+C_{ij}]\,\Xi_j = X_i \qquad (5\text{-}6)$$

where $i\ ,\ j\ = 1,2,\ldots,6$.

The added-mass and damping matrices A_{ij} and B_{ij} are real and depend on the frequency of encounter and the ship's speed. The complex vector X_i denotes the wave induced linear exciting forces and moments which also depend on the wave frequency and forward speed. The real matrix M_{ij} contains the inertial properties of the ship and the matrix C_{ij} contains the linear hydrostatic restoring coefficients in all six motion modes.

The primary computational task underlying the evaluation of the motions and added resistance of a ship in waves is the determination of the velocity potential governing the flow around the ship hull. Ignoring viscous effects, it may be assumed the existence of a velocity potential Ψ representing the flow. Furthermore, it can be decomposed as follows :

$$\Psi = \Phi+\mathrm{Re}\{[A(\varphi_I+\varphi_D)+\sum_j \Xi_j\varphi_j]e^{i\omega t}\} \qquad (5\text{-}7)$$

where A is the incoming wave amplitude.

The potential Φ governs the steady ideal wave flow around the ship and is real and independent of time. The remaining component represents the unsteady flow. In particular, the complex velocity potentials φ_I and φ_D denote the incident and diffraction potentials, respectively, due to an incident potential of unit amplitude. The radiation potentials φ_j represent the time harmonic wave disturbance caused by the ship oscillating with unit amplitude in the direction of mode j at the frequency of encounter.

The determination of the steady and time harmonic potentials allows the evaluation of the hydrodynamic coefficient matrices A_{ij} and B_{ij} and the exciting force vector X_i. The complex amplitudes of the ship oscillatory motions in regular waves follow from the solution of the linear system (5-6).

Computations of the heave and pitch motions of the TGC-770 original hull form and the seven variants (variant #1 - #7), using the code SWAN, were made at the service speed of 40 knots and in head waves.

The following figures compare the seakeeping performance of each one of the seven variants with that of the original hull form. The results indicate very little difference in the seakeeping performance of the TGC-770 and the variants with bulbous bow. Nevertheless, in general the bulbous bow improved slightly the seakeeping performance of the original hull.

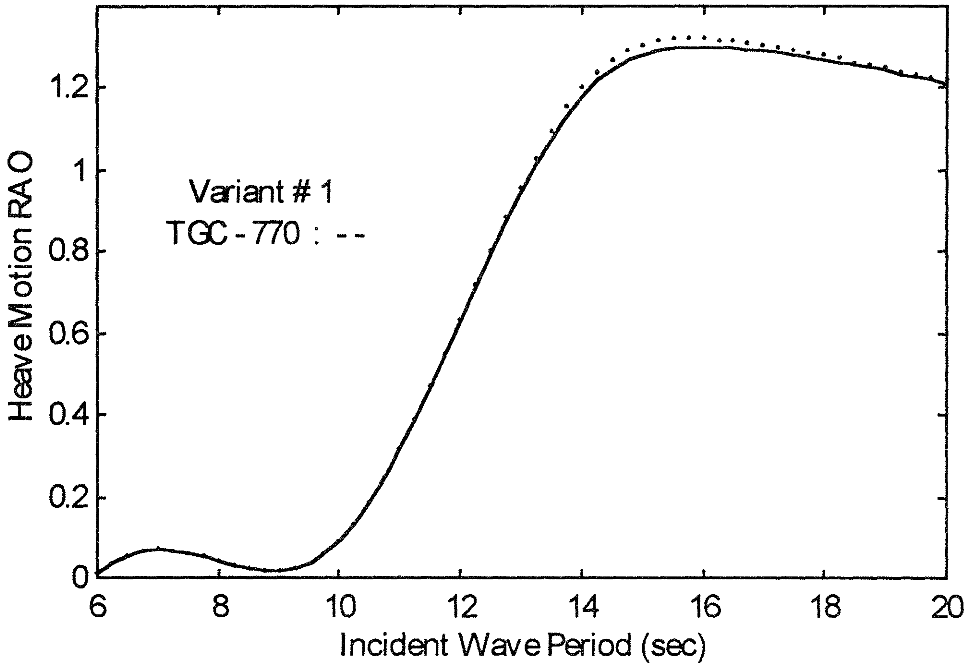

Figure 5-5 : Heave motion RAO (variant # 1 compared with TGC-770)

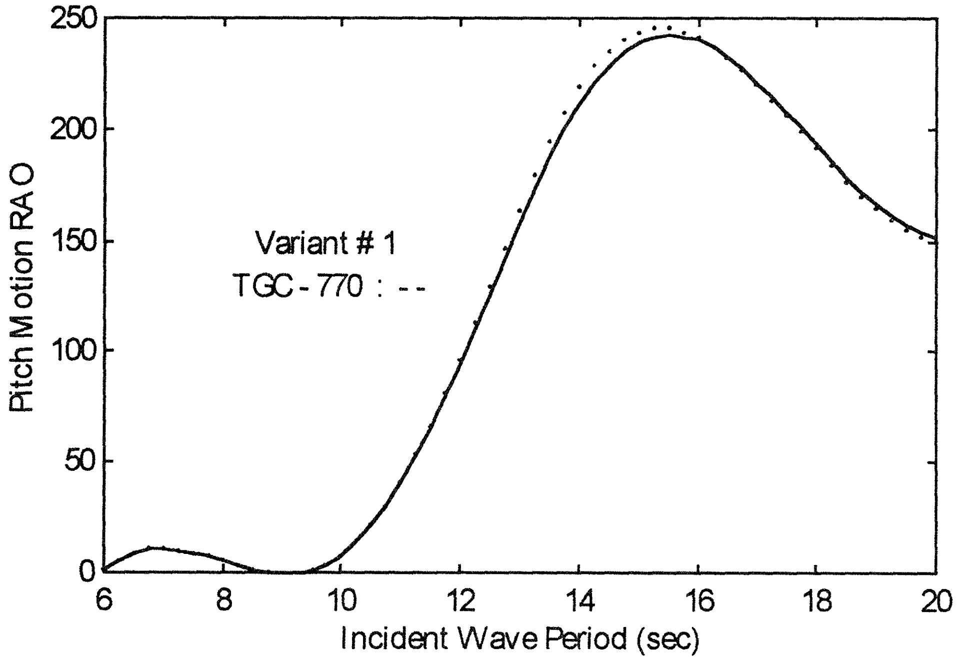

Figure 5-6 : Pitch motion RAO (variant # 1 compared with TGC-770)

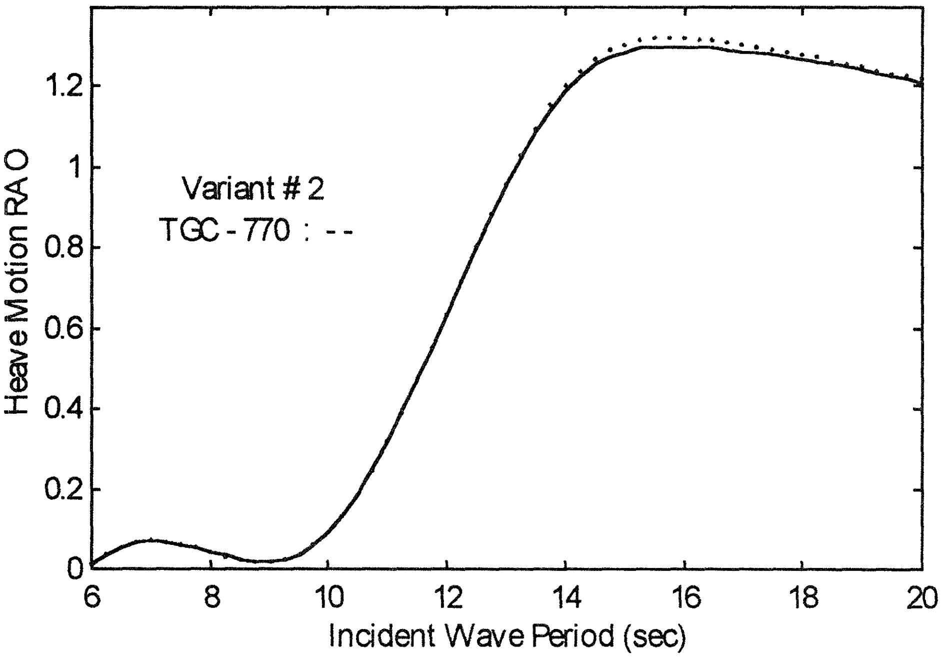

Figure 5-7 : Heave motion RAO (variant # 2 compared with TGC-770)

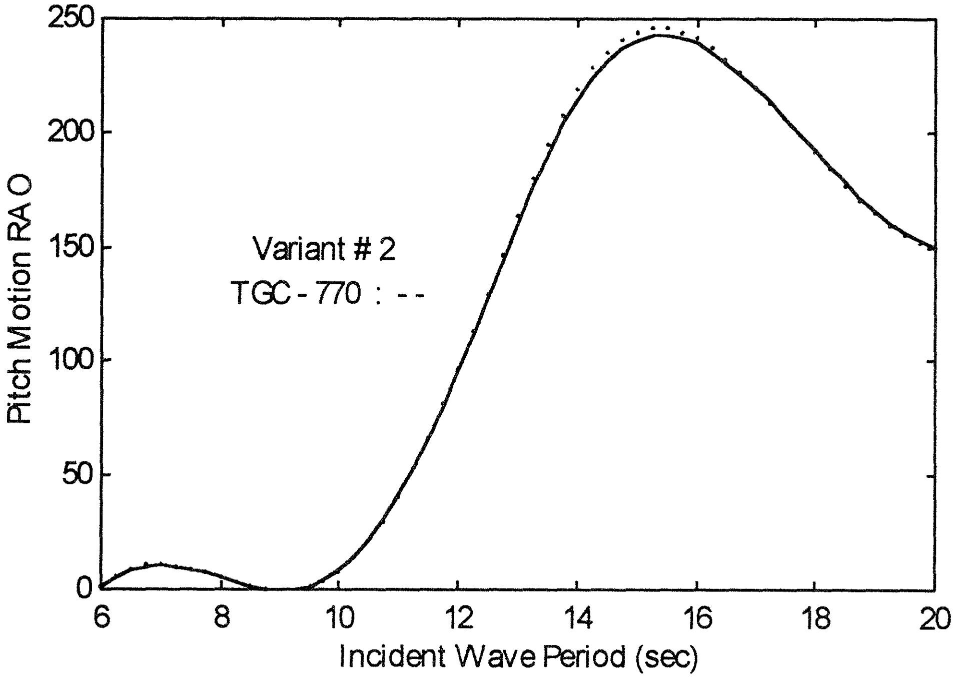

Figure 5-8 : Pitch motion RAO (variant # 2 compared with TGC-770)

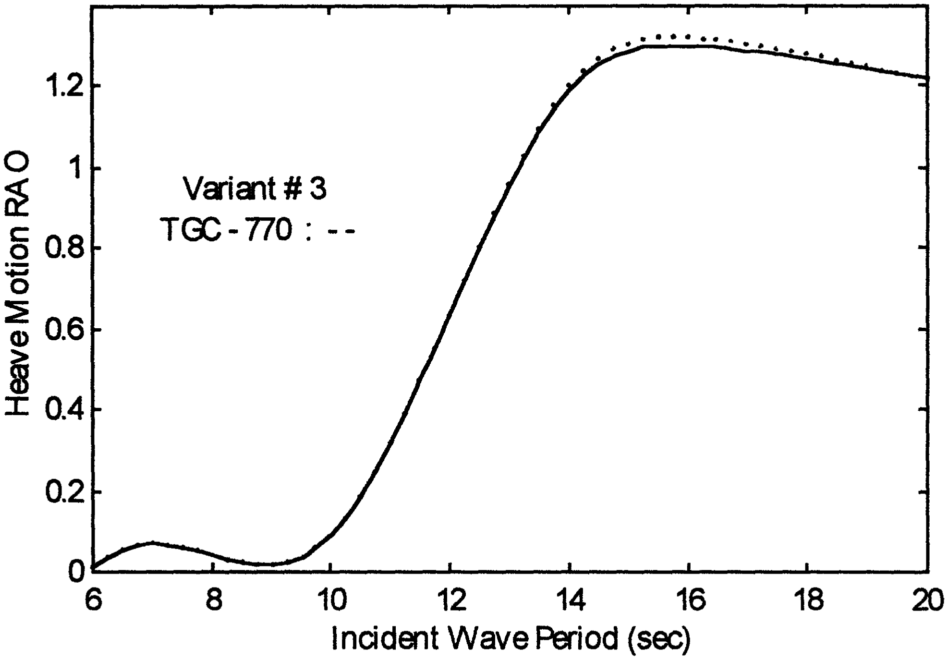

Figure 5-9 : Heave motion RAO (variant # 3 compared with TGC-770)

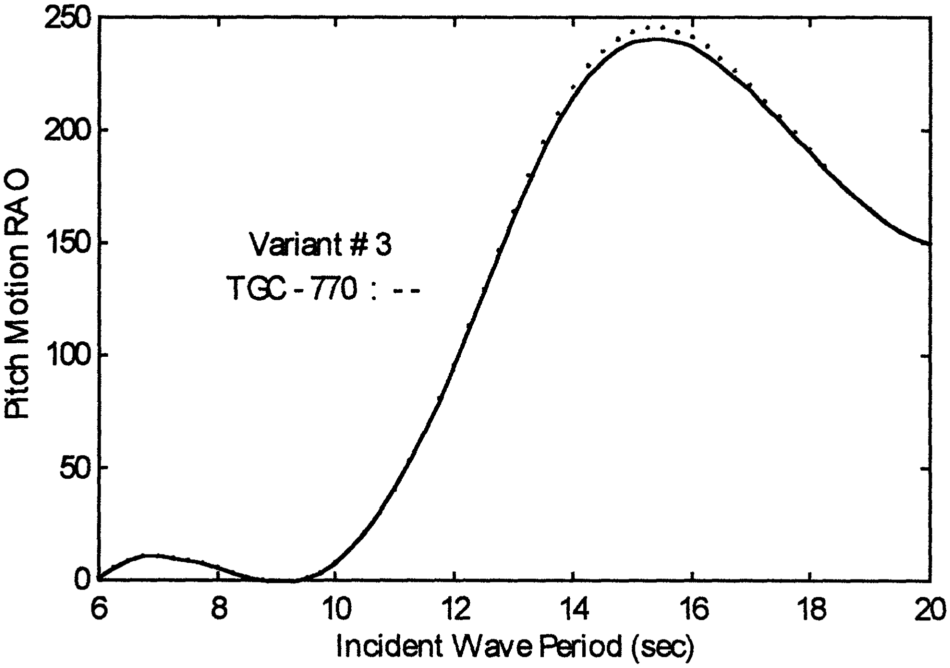

Figure 5-10 : Pitch motion RAO (variant # 3 compared with TGC-770)

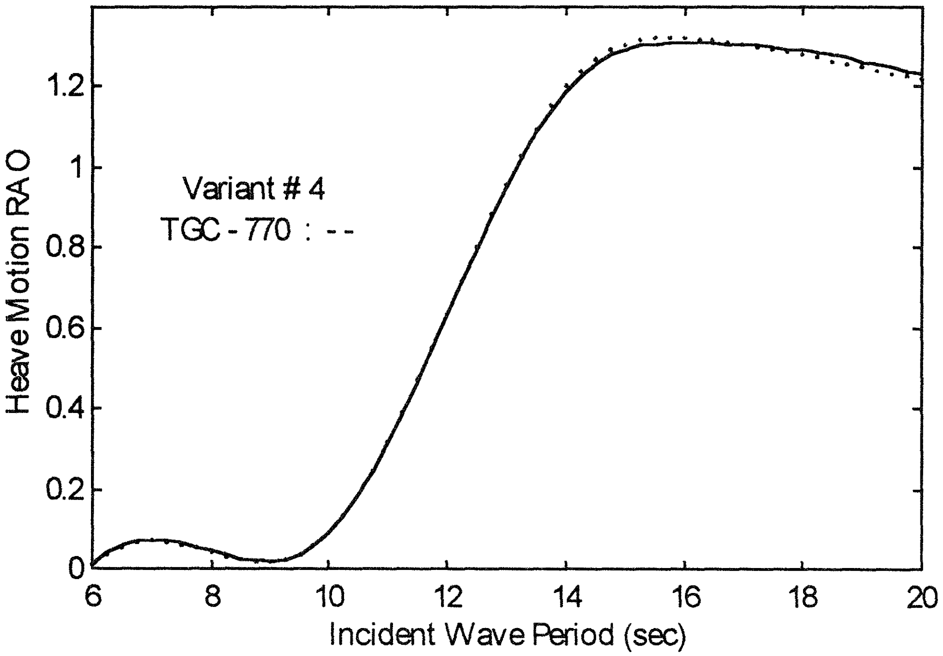

Figure 5-11 : Heave motion RAO (variant # 4 compared with TGC-770)

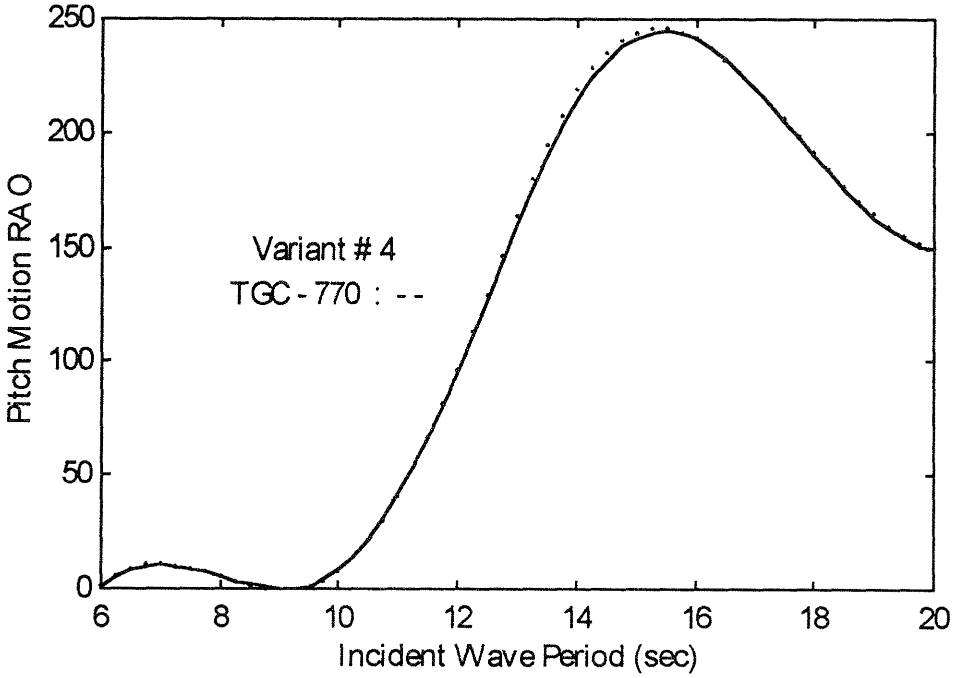

Figure 5-12 : Pitch motion RAO (variant # 4 compared with TGC-770)

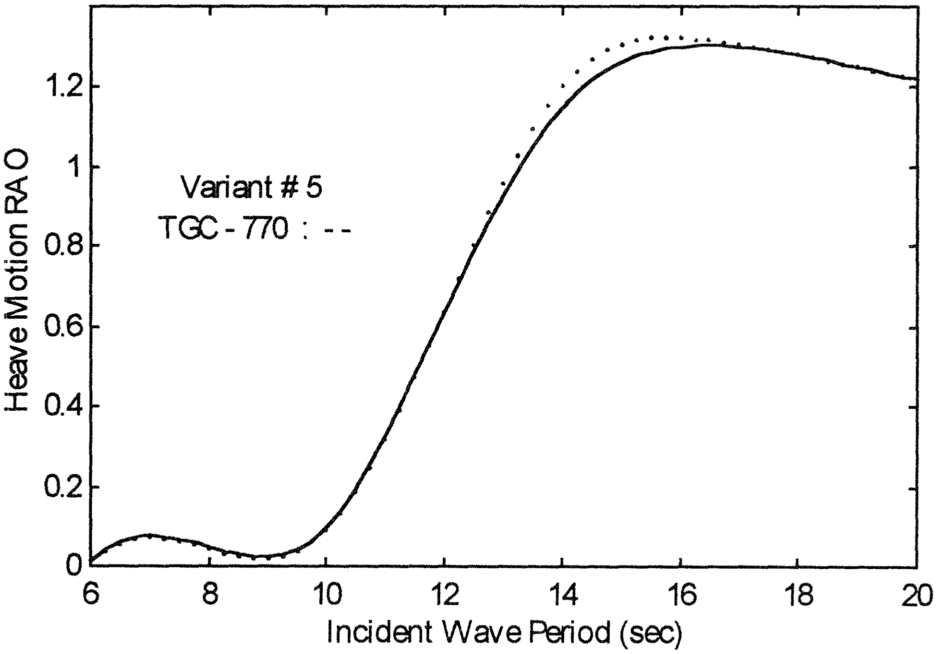

Figure 5-13 : Heave motion RAO (variant # 5 compared with TGC-770)

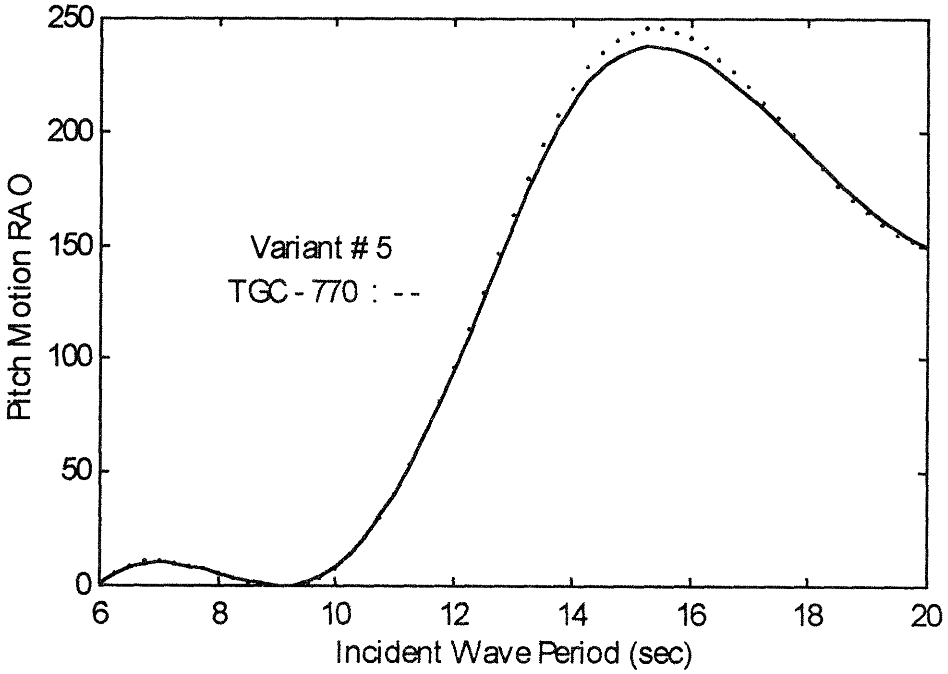

Figure 5-14 : Pitch motion RAO (variant # 5 compared with TGC-770)

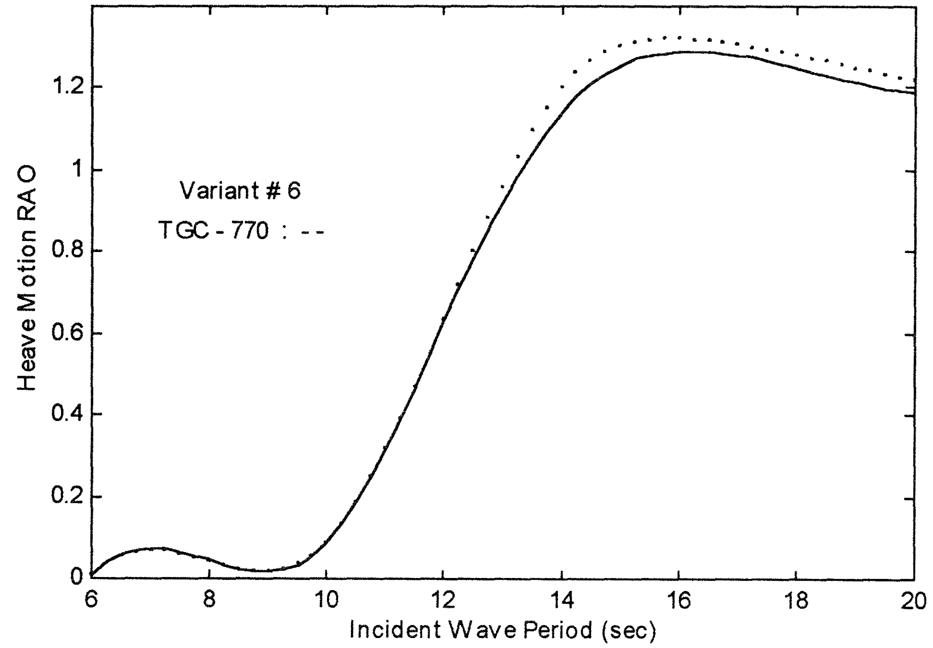

Figure 5-15 : Heave motion RAO (variant # 6 compared with TGC-770)

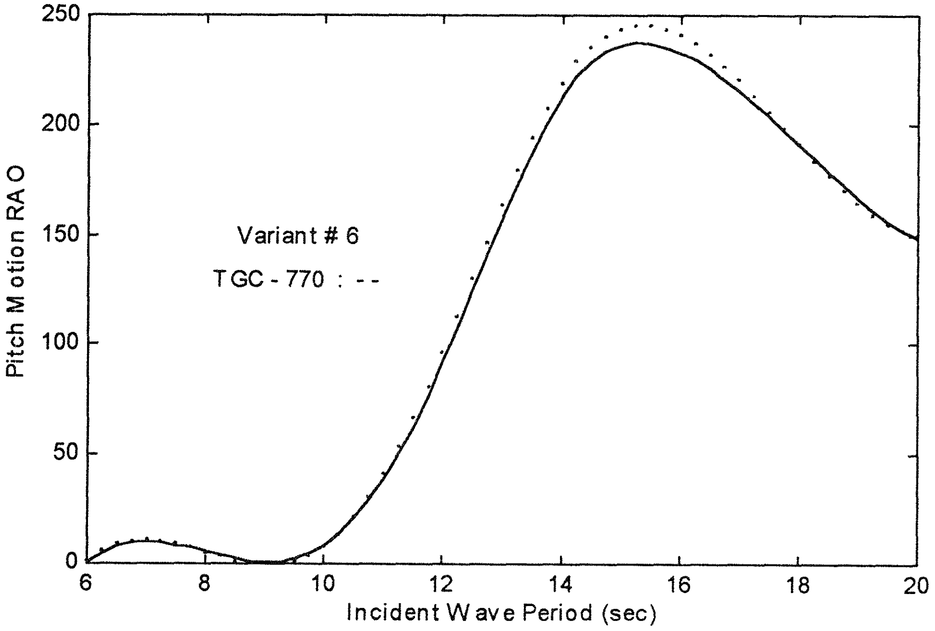

Figure 5-16 : Pitch motion RAO (variant # 6 compared with TGC-770)

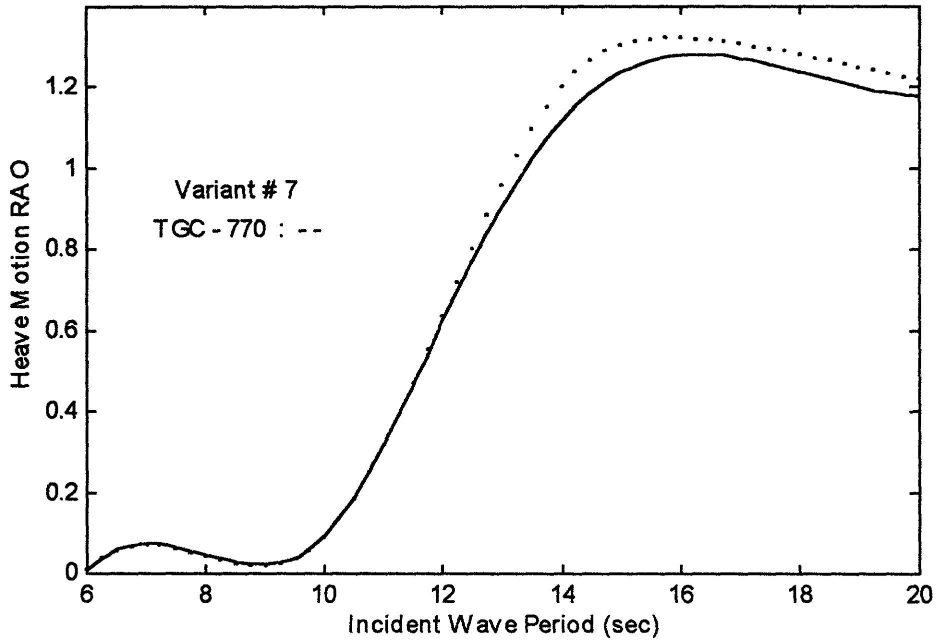

Figure 5-17 : Heave motion RAO (variant # 7 compared with TGC-770)

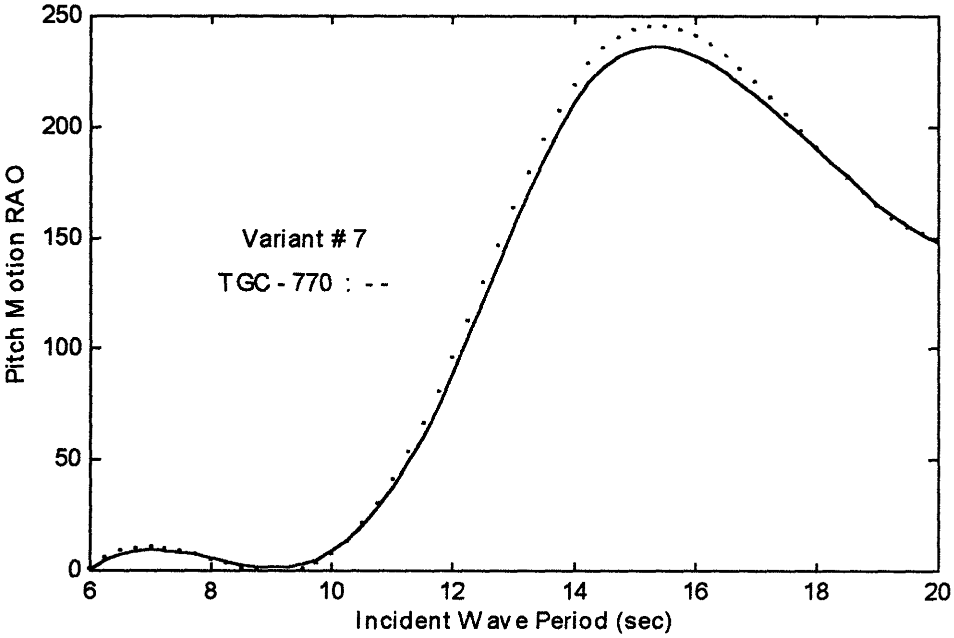

Figure 5-18 : Pitch motion RAO (variant # 7 compared with TGC-770)

5.3.2 Added resistance

The mean additive component of drag which arises from the unsteady flow is largely unaffected by viscous effects and is often referred to as 'wave-added resistance' or simply added resistance. The added resistance of a ship in waves is defined as the mean value of its total resistance minus its calm water resistance. Linear theory allows the separate solution of the steady and unsteady flows and in regular waves permits the the definition of the added resistance as the mean value of quadratic products of time harmonic quantities functions of the velocity potentials φ and their spatial gradients. The method used by SWAN to calculate the added resistance relies on the integration of the hydrodynamic pressure over the ship's hull.

The added resistance of the TGC-770 and the seven variants was computed by SWAN in head waves, where the maximum added resistance is expected. Its average value has been determined in the Pierson-Moskowitz spectrum with a mean zero upcrossing period of 10 seconds and a significant wave height of 6 meters (shown in Figure 5-19).

The standard mean added resistance computation using SWAN proceeds as follows. The added resistance RAO is first determined in regular waves over a broad range of frequencies (for variant #7 shown in Figure 5-20). The resulting RAO curves are then multiplied by the PM spectrum and integrated across the frequency range in order to obtain the average value for the added resistance in the specified sea state.

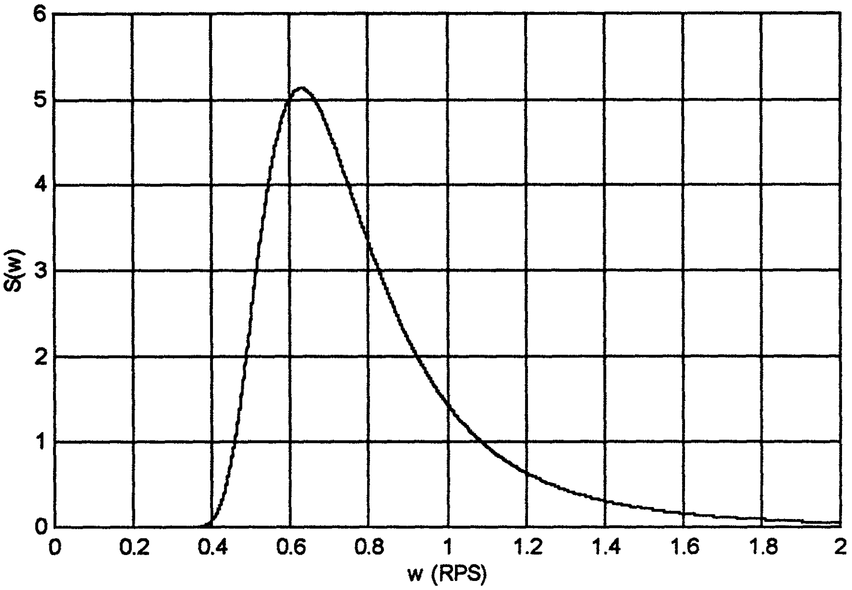

Figure 5-19 : Pierson-Moskowitz wave spectrum for significant wave height of 6 meters and mean zero upcrossing period of 10 seconds

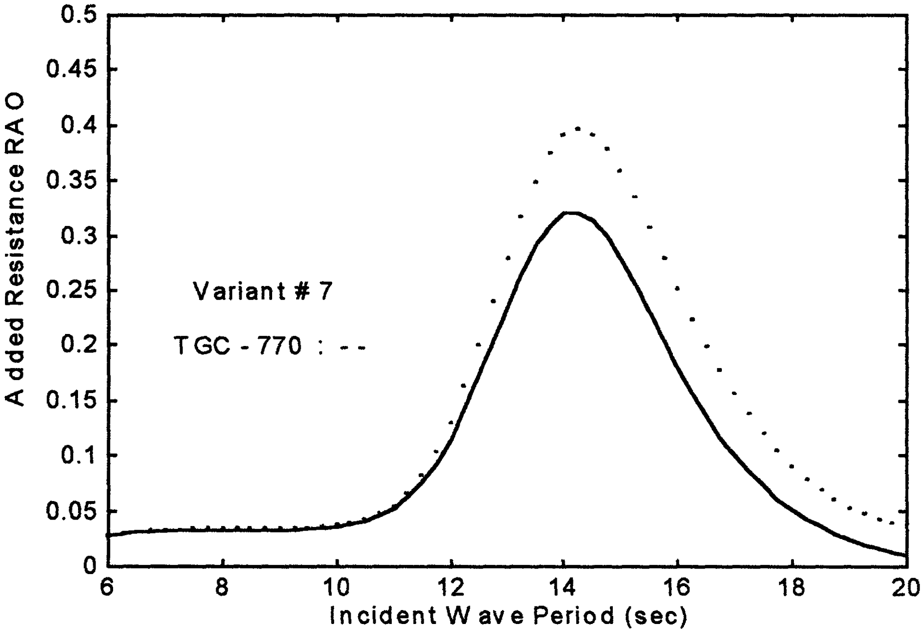

Figure 5-20 : Added resistance RAO (variant # 7 compared with TGC-770)

For the seven variants and the TGC-770 original hull form these values are presented in the following table :

Variant	**Mean added resistance (kN)**
TGC-770	1,122
# 1	1,106
# 2	1,092
# 3	1,088
# 4	1,067
# 5	1,055
# 6	1,047
#7	1,026

Table 5-3 : Mean added resistance calculations at 40 knots
in PM spectrum Hs = 6m, Tz = 10 sec

These results indicate a decrease of mean added resistance in head waves and at the service speed of 40 knots for the bulbous bow variants #1 - #7. Once again the largest diameter bulb tested (variant #7) presented the largest decrease (10%) in resistance.

Chapter 6

Market Review and Benefits

6.1 Introduction

FastShip aspires to provide a transportation innovation that will open an entirely new service quality option to trans-Atlantic shippers. It will provide many shippers with a trans-Atlantic transportation value superior to anything existing or realistically available in the foreseeable future. This service will permit the opening and capture of an important new freight market.

The innovation created by FastShip is that it offers dramatically superior service at somewhat higher costs than its maritime competition, while providing significantly lower costs with only a marginal decrease in service quality compared to its air freight competition. These characteristics position Fast Ship between existing air and ocean services, in effect operating in a large, intermediate market niche that is currently served quite poorly.

In the following figure the projected total US/Northern & Western Europe market size and Fast Ship projected market share (reference [30]) are shown. Fast Ship projected market share is 4.8% for 1998 (or 36,500 FEU per year and ship) and 7.4% for 2001.

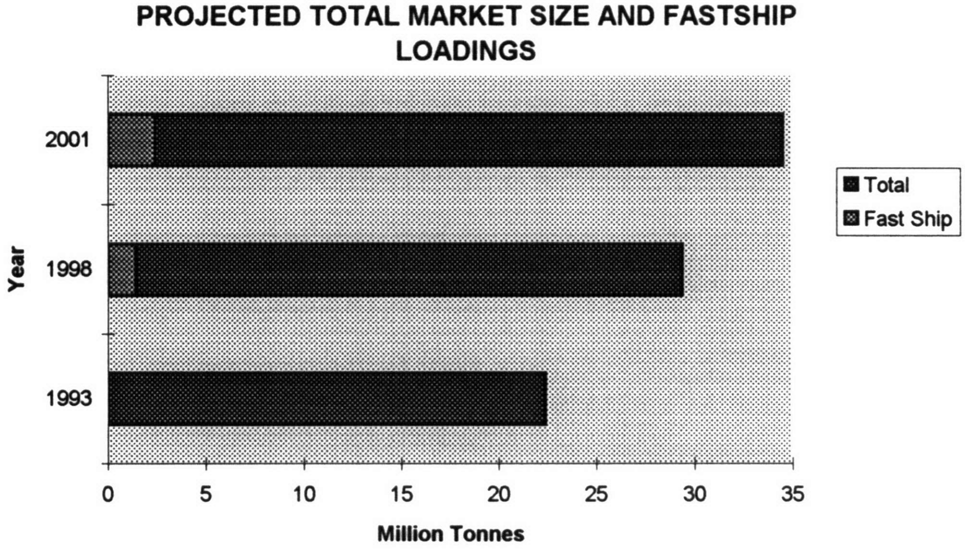

Figure 6-1 : Total market size and FastShip's loadings (reference [30])

6.2 Total Logistics Cost Analysis

A variety of methodologies are available to estimate how much shippers value the characteristics of one mode relative to others. Total logistics cost analysis is the definite technique for a quantitative analysis, providing an estimate of monetary benefits of mode choice when transport service, shipper and commodity characteristics are known.

Fast Ship's "Value Creation Model" is in fact a total logistics cost analysis of the benefits to given customers using Fast Ship over ocean or air freight services. The use of a total logistics cost model is extremely effective because it is possible to directly determine the commodity groups that would benefit from the service and thus should switch from existing modes to Fast Ship.

6.2.1 FastShip Value Creation Model

This model is a total logistics cost model and evaluates the net effect of differences in rates balanced against the differences in inventory investment and inventory carrying costs among the different modal choices available to a shipper.

The effect of modal choice on inventories shows up in several ways :

- pipeline inventory (a function of the average length of time goods are in transit). It is mainly affected by the inventory carrying charge, which is usually expressed as an annual rate, and represents the capital carrying cost for the applicable commodity. The rate includes not only the interest cost of having capital tied up in inventory, but also incorporates such elements as insurance, security, warehousing, handling and administrative costs.
- cycle stock inventory (a function of the frequency of shipments). That is goods awaiting shipment at the origin and awaiting sale at the destination. A higher frequency service creates value at both ends.
- safety stock inventory (a function of the length of the replenishment cycle and the variability of the replenishment cycle). It represents that quantity of inventory held at the destination in order to account for unreliability in arrival times and variability in demand for the good.

The transit time, reliability and service frequency are the critical parameters in determining value creation.

The formulation of the Fast Ship total logistics cost model is extremely conservative. The conservatism of the model primarily lies in several areas :

- does not take into account the value of other non-transport related economic benefits that may be enabled by the new service, such as : changes in manufacturing strategy, restructuring of supply chain and distribution strategies, smoothing of manufacturing and shipping operations, improved ability to fit planning cycles and ability to reduce non-transport replenishment time.

- undervalues situations in which the value of rapid access to the marketplace is high and well beyond what is reflected in the book value of the inventory.
- misses the potentially unusually high cost of a stockout.

Because of this conservatism the model will be highly accurate in identifying high value commodities which should have a preference for Fast Ship service, while it will completely fail to identify a large number of commodities which are time sensitive (but not high value) and which will also prefer the Fast Ship.

One key issue to be considered is whether dramatic improvements in aviation efficiency are possible that will lower air freight costs to levels competitive with Fast Ship with no loss in service level. Conversely, the possibility of traditional maritime operations improving service levels much closer to those of Fast Ship without a corresponding increase in costs would alter the value creation results from the other direction. Lastly, the possibility of dramatic rate cuts by existing ocean carriers must be examined for feasibility and impact on FastShip's competitive advantage.

There is little possibility that any of these competitive responses will significantly impact FastShip's market within the foreseeable future. Neither air cargo nor maritime services are able to significantly reduce rates given current technology and operations. The economics of container trades make it infeasible to adjust operating schedules to compete directly with Fast Ship. The necessary adjustments would involve abandoning most of the large existing market that container vessels are best suited to serve, in order to attempt to compete for a niche market with inappropriate vessels.

6.2.2 M.I.T. Total Logistics Cost Model

FastShip's value creation model compares itself against its typical ocean competitors, providing an accurate view of what the typical shipper will receive in terms of value creation. In order to provide precise analysis for a broader range of shippers, however, MIT's analysis of FastShip is therefore compared against air and ocean competitors. A short description of MIT Total Logistics Cost Model follows.

Five factors that contribute to logistics cost are considered in MIT's model :

1. Interest charges on goods awaiting shipment.
2. Interest charges on goods in transit.
3. Interest charges on goods held as safety stock.
4. Loss, damage or decay of goods between manufacture and sale.

5. Cost of transportation.

The first three costs are directly related to the value of the product to be shipped and increase as its value increases. The fourth is related to the product's perishability (either its physical life or the duration of its marketable life) and will become more important as the ratio of product life to transit time approaches one. The fifth factor, the cost of transportation, is related to the speed of the vehicle chosen and the number of units of freight that it can carry. So a high-speed, low-volume vessel will be considerably more costly (on cost per ton-mile basis) than a vessel with high capacity and a relatively lower speed.

As a manufacturer produces goods, they are accumulated until reaching a quantity (x) that is deemed large enough to make a shipment. When the shipment is made, the quantity on hand becomes zero and, as more goods are manufactured, they again accumulate up to the quantity (x) before the next shipment goes out. The average amount of stock on hand is x/2. The cost of holding the quantity x/2 is the origin cost :

$$Origin\ Cost = i * V * \frac{x}{2} \tag{6-1}$$

where i is the annual interest rate, V is the value of each product unit and x the number of units accumulated for each shipment.

Goods may be sold to a buyer in a variety of ways. The buyer may take delivery of the goods at the manufacturing plant, at his own facility or at a different point in between. During the time the goods are in transit, they are in effect a moving inventory. The cost for this in transit inventory for shipments of size (x) is the shipment size times the value per unit times the interest rate per day. This may be expressed as :

$$\textit{In Transit Inventory Cost} = (x * V) * (i * \frac{T}{365}) \qquad (6\text{-}2)$$

where $(x * V)$ is the value of each shipment and $(\frac{T}{365})$ is the fraction of a year that the goods are in transit.

Transportation systems are not normally perfectly reliable. The mean transit time may have a standard deviation that ranges from very small to a very large. A shipper can protect himself from a stockout by holding a reserve, called a safety stock. Assuming that the distribution of transit times between a specific origin and destination is normally distributed, the shipper can choose the level of protection from stockout that he desires by choosing a stockout volume that is a multiple of the standard deviation for the particular origin-destination pair. This may be expressed as :

$$\textit{Safety Stock Cost} = (\frac{i * V * x}{365}) * (k * \sigma) \qquad (6\text{-}3)$$

where $(\frac{i * V * x}{365})$ is the interest cost for one day for a shipment, σ is the standard deviation of the transit times and k is a multiplier that is linked to the degree of protection desired, typically 1.28, 1.64 or 2.58, which would respectively give a 90%, 95% or 99% fill rate from stock.

Products vary greatly in their ability to hold value. Some, like fresh fish and flowers, have a short physical life and must be gotten to market quickly, or not at all. Others, like clothing, have their higher value early in the selling season and are worth less as the season nears its end. Other products have life cycles that extend beyond a single season or even a single year. For these, it is necessary to make accurate forecasts concerning demand occurring near the end of the cycle, so that the shipper is not left with excess inventory.

Costs due to loss of product value are not determined by the inventory interest rate. Rather, the value loss is related to a change in demand or product condition that is linked to the portion of the product's life that has passed since its manufacture. Value decay as related to time spent in transit may be expressed as :

$$\textit{Perishability Cost} = (1 - S) * (V * x) * \left(\frac{T}{L}\right)^{d} \tag{6-4}$$

where S is the product's salvage value in per cent, T is the time spent in transit in days, L is the product (or shelf) life in days and d is a commodity decay parameter.

Finally, the cost of transportation is the price charged by the carrier for the movement of goods from origin to destination. It includes all modes involved and the transfers between modes. In general, faster service and smaller cargo volumes are correlated with higher prices. The expense of this faster service may, or may not, be offset by lower interest costs and quicker market response. This is exactly the problem that MIT's total logistics cost model try to solve : For a given break even freight rate ($ 3,500 per FEU) charged by FastShip what will be the total logistics cost for various commodities if they are shipped by FastShip, another typical ocean or air competitor.

6.2.3 Supply Chain Management

A trend increasingly growing is that of supply chain management. Shippers are implementing the concept that not only can reduce total logistics cost by picking the optimal mode for their distribution system, but additional benefits are available by restructuring their manufacturing processes and supply chain network. Fast Ship provides an excellent opportunity for many shippers to re-engineer their supply chain to take advantage of this new, superior trans-Atlantic service.

In the past, companies viewed the distribution system as a transportation cost minimizing problem. The only target was to minimize the total logistics cost. Today, the dynamically changing corporate environment is encouraging more aggressive approaches towards the management of logistics activities and towards explicitly recognizing logistics management in the firm's strategic business plan.

No matter how fast a product is developed, a company will not gain a competitive advantage if the product is delayed in marketing and distribution. Speed and reliability are needed at all points in the distribution channel. Products must travel to meet consumer demand as it occurs. A much broader range of shippers will be able to afford rapid, reliable trans- Atlantic transport with Fast Ship. This provides them with the opportunity to utilize the same rapid response techniques in international trade that are currently limited to their domestic market.

With affordable, rapid, reliable trans- Atlantic trade , many shippers will be able to eliminate one or more layers in their distribution system or to consolidate multiple facilities to a single, efficient site. This would not only reduce warehousing, transport, handling and administrative costs, but the increased directness permits a competitive advantage in terms of quicker response to customer demands.

Commodities are experiencing increasingly short product life cycles (the time between the launch of a new product and when demand plunges or the product becomes obsolete), which are now usually measured in months instead of years. The cost of obsolescence and product non-availability (not having the right product at the right time at the right place) can be very high in terms of lost sales, lost shelf space and eroded good will. In addition, the risk and competitive costs of poor product introduction, and inadequate planning and execution in the supply chain have increased significantly. These factors have forced companies to attempt to integrate distribution with marketing and production, in order to manage delivery based on reliable velocity through the system. Decreasing product life cycles and increasing differentiation and specialization mean efficient supply chains are becoming more critical to a wider range of goods. Fast Ship makes the necessary rapid and reliable trans-Atlantic link affordable to this broader range of commodities.

Among the service characteristics that FastShip will bring to trans- Atlantic shippers at an uniquely affordable rate are high frequency, reliability, dedicated port facilities, high speed, sufficient capacity, utilization of standard containers, sophisticated third parties logistics and the elimination of intermediate carriers. Consequently, FastShip adds substantial value to the trans- Atlantic distribution chain. In particular, many shippers will be able to integrate their North American and European manufacturing and distribution processes. Total logistics cost savings will accrue, at the same time that there will be enhanced value-added information services, less handling and administration, and fewer concerns about shipment reliability. FastShip brings to trans-Atlantic shippers service and benefits that were previously only available through air freight services that were affordable only to a few.

6.3 Latent and Stimulated Demand

The terms latent and stimulated demand are occasionally confusing terms that refer to partially similar conceptualizations of types of demand that are not presently being manifested in the market. Latent demand is demand that is currently going unmet due to an insufficient supply or otherwise unfavorable conditions. Stimulated demand represents goods that will dramatically increase their trans-Atlantic shipment due to the existence of an improved service.

In the case of FastShip, latent demand is defined as the capture of trans-Atlantic shipments that, without the existence of FastShip, would otherwise not travel between the North America and Europe. FastShip would provide a service that does not currently exist and an improvement over existing services. Therefore, cargoes that do not currently travel across the Atlantic would now be willing or able to do so.

Stimulated demand, goods that will increase their shipment due to improved service, could be illustrated by a variety of North American commodities that are currently barely competitive in the European market, but occupy a small niche due to complex marketing issues of product differentiation and import substitution. These goods are likely to find a greatly increased consumer market with reduced shipment and total costs, and thus lower prices for consumers. Shippers will respond by increasing the quantities of these quantities shipped. These commodities represent a substantial potential to be a newly created market of trans-Atlantic cargoes for FastShip.

The generation and capture of new demand, rather than fighting for market share in a zero sum game, has long been a mark of successful businesses. Numerous examples of latent and stimulated demand tied to improved transportation or communication services exist. For instance, fresh cut flowers, express package delivery, trans-continental rail container service and cruise ship voyages, all represent areas in which demand expanded enormously when a transportation innovation occurred allowing the expansion of supply.

The MIT's total logistics cost model was applied to commodity specific data for Northeast U.S. trade with Northwest Europe. Commodities for which latent or stimulated demand was likely were identified by selecting goods for which FastShip created very high total logistics cost savings relative to total product value. Commodities were further eliminated from consideration based on considerations of time sensitivity. In particular, any good without changes in value based on seasonality or perishability was eliminated from consideration. The finally selected commodities were analyzed by inputting parameters in the total logistics cost model and applying a variety of elasticities to the results for percentage decreases in delivered price.

Own-price elasticities represent the percentage change in the consumption of a product due to a given percentage change in its own price. An elasticity of -1.0 is considered a normal elasticity, meaning that a one percent decrease in the commodity price will result in a one percent increase in its consumption. In addition to own-price elasticities, published estimates have been empirically generated for elasticities of import substitution for domestic production of consumer goods. These import elasticities represent the percentage change in total imports given a percentage change in the price of imports and are usually utilized in conjunction with changes in currency values or tariff policies. Values found in the literature ranged from -0.78 to -1.62.

A single elasticity estimate had to be derived in order to apply the elasticities to the selected commodities results for percentage decreases in delivered price. This value was obtained by averaging a normal elasticity of -1.0, a published commodity-specific own-price elasticity and a constant import substitution elasticity of -1.62. Results for stimulated demand were then obtained by multiplying the percentage decrease in delivered price by the derived elasticity value. This methodology provides a conservative, lower-bound estimate of the percentage increase in demand for trans-Atlantic shipment stimulated by FastShip.

In particular, results of the latent and stimulated demand analysis conducted with use of this methodology showed widely varying results depending on specific commodity characteristics. The commodities for which the largest relative benefits in total logistics costs accrue are relatively low value (from $0.25 to $2.00 per pound) and are quite time-sensitive, with a marketable shelf life of approximately two weeks, a low salvage value and a fairly high decay parameter. In addition, this quantitative analysis showed that the most appropriate cargoes, such as certain seasonal apparel, certain time-sensitive publications and packages and certain fresh seafood, meet, produce and prepared foods may increase their trans-Atlantic demand by from 20% to 100%. Of course, historical examples of fresh cut flowers and small package express can make even greater percentage increases possible for commodities that are being shipped in limited quantities presently, but are enabled by FastShip to develop a broad new market. Likewise, appropriate commodities, moving only in minimal quantities today, have the potential to dramatically increase their trans-Atlantic shipment and the use of the quantitative analysis underestimates the percentage increases that may occur for these products.

In addition to the generation of demand for trans-Atlantic shipments due to cost savings, there are enormous possibilities for the additional capture of latent demand from strategic logistics management. Strategic logistics management involves the reformation of a company's corporate strategy to explicitly incorporate its distribution system, generating a competitive advantage. Among the most common strategies encompass consolidation or decentralization of production processes, just-in-time (JIT) manufacturing, quick response and build-to-order services and inter-company partnering . Fast Ship also acts as a strategic tool in areas such as decreasing risk, serving as a component of response to change and US entry into the changing European market and its evolving transport network.

Logistics benefits come not only from reducing inventory costs but from the creation of competitive advantages. However, logistics-focused strategies demand rapid and especially reliable transportation services like FastShip. Air cargo can meet this need for only a limited number of high value commodities. So for trans-oceanic shipments FastShip will be the mode of choice for most corporations looking to implement their logistics strategies on a global basis. A substantial quantity of new cargoes, in addition to the stimulated demand from cost savings, is likely to be generated because of the benefits FastShip provides in strategic logistics management.

6.4 Competitive Responses

Undoubtedly, both the maritime and air freight sectors will have some cargoes shifted away from their services by FastShip, while they also observe the generation and capture of unexploited demand by the new service. Both the maritime and air freight sectors, when taken as a whole, will be hardly affected, since, even at full utilization, FastShip represents a very small percentage of the trans-Atlantic market. Nonetheless, some operators may be particularly impacted by the new service, and thus may feel a need to respond to the competition posed by FastShip. Analysis of both the air and maritime sectors indicates that neither is economically capable of making a significant shift to compete with FastShip. Furthermore, there appears to be little chance of the type of economically viable technological innovation necessary to compete with FastShip.

Standard air services carried on dedicated cargo aircraft as well as expedited air can not lower rates far enough to effectively compete with FastShip and also maintain adequate profitability and survive. Furthermore, service changes are inappropriate. Space-available cargo in the belly of passenger aircraft may be able to lower rates in order to remain competitive with FastShip, but is constrained in capacity by airlines' increasing passenger load factors and represents a possibly decreasing share of the trans-Atlantic air freight market. Technologically, aviation has little feasibility of significantly reducing costs at current service levels within the foreseeable future.

The maritime industry similarly faces economic and technological constraints to its potential competitive responses. Standard ocean services are operating very close to costs. Rate decreases would be both non-sustainable and largely ineffective in attracting FastShip's service oriented market base. Attempts to match FastShip's three times a week schedule with conventional vessels are economically infeasible. At least seven large container ships would have to be dedicated to a port-to-port service. However, these vessels would need to attract unattainable market volumes of at least four times the size of FastShip's needs in order to break even.

Technological approaches could be used to attempt to address Fast Ship's competitive advantages in frequency, speed and reliability. Alternative designs, such as Australia's wave piercing catamarans (Sea Cats) and Japan's TechnoSuperliner, are capable of similar speeds, but do not possess either the cargo-carrying capacity or seakeeping abilities of FastShip. Therefore, technological innovations that exist or are proposed are not competitors to FastShip, but to other markets. Finally, competitors attempting to approach FastShip's level of service (speed, reliability, capacity, cargo-handling system, dedicated terminal facilities) would have cost structures equivalent to or higher than FastShip, with inferior connections and reliability.

Chapter 7

The bulbous bow as an investment

7.1 Assumptions

In the following economic evaluation a comparison is made between the original and the seven modified hulls with bulbous bows (variants # 1 - # 7). The assumptions and simplifications used in this analysis are as follows :

1. The modified versions are assumed to operate with the same speed strategy (service speed of 40 knots) in which the time budget of the vessel remains the same and energy is saved.

2. The following time budget is assumed for the original TGC-770 and the seven variants :

   Trip duration (days) : 7

   Total days at sea per year : 240

3. There is no change assumed in fuel consumption when traveling under different loading conditions. The benefits obtained from the reduced calm water resistance for the seven variants (for a constant displacement $\Delta = 29{,}080\ m^3$) are considered.

4. A consistent fuel consumption per horsepower-hour is assumed for each ship, since the engines that will be used and, thus, their specific consumption curves are not known yet (it was assumed sfc = 0.32 lb/hp-hr).

5. The differential initial construction cost needed for the installation of the bulbous bow for each variant was represented as a down payment in this analysis. Furthermore, it was assumed that the construction of anyone of the seven variants will not delay the delivery time of FastShip (1998).

6. The base year for this cost analysis was 1998.

7. It was assumed that all vessels have 15 years of useful economic life.

8. The cost of capital was assumed to be 10 % .

9. The fuel oil price was assumed to be $ 250 per ton (1998).

7.2 Life cycle savings by selecting a bulbous bow

Based on the previous assumptions the calculations of the present value (PV) for the life cycle savings resulting from using a bulbous bow variant instead of the original TGC-770 were made using the following formulas :

$$AFC = \frac{sfc * BHP * (24 * d_{as})}{2{,}240} * FP \qquad (7\text{-}1)$$

$$AS = R_{t,ratio} * AFC \qquad (7\text{-}2)$$

$$PV(TS) = AS * \sum_{t=1}^{15} \frac{1}{(1+i)^t} = AS * 7.606 \qquad (7\text{-}3)$$

where AFC is the annual fuel cost for TGC-770, BHP is the brake horsepower required for TGC-770 to achieve 40 knots, d_{as} are the days at sea, FP is the fuel price , AS represents the annual savings by using one of the seven variants instead of the original TGC-770 , $PV(TS)$ is the present value of this cash flow of annual savings, $R_{t,ratio}$ is the ratio of total calm water resistance with and without bulb and i is the capital cost .

The annual fuel cost for TGC-770 was estimated using the formula (7-1) and the assumptions mentioned in the previous section :

$$AFC = \frac{sfc * BHP * (24 * d_{as})}{2{,}240} * FP = \frac{0.32 * [\frac{10{,}073 * 0.5144 * 40}{0.746}] * (24 * 240)}{2{,}240} * 250 \Leftrightarrow$$

$$\underline{AFC = \text{ \$ 57 million}}$$

Using this estimated value for AFC and the formulas (7-2) and (7-3) calculations were made in order to estimate the present value of the life cycle fuel savings for each variant. The results from these calculations are presented in Table 7-1 .

Variant	Rt (kN)	Rt ratios	Annual savings (million $)	PV of total life savings (million $)
TGC770	10073	1,000	$ 0	$ 0
# 1	9984	0,991	$ 0.5	$ 4
# 2	9969	0,990	$ 0.6	$ 5
# 3	9915	0,984	$ 0.9	$ 7
# 4	9658	0,959	$ 2.3	$ 18
# 5	9555	0,949	$ 2.9	$ 22
# 6	9197	0,913	$ 5.0	$ 38
# 7	8922	0,886	$ 6.5	$ 50

Table 7-1 : Present value total savings calculations

The effect of using a different cost of capital in this analysis than the assumed conservative value of 10% is shown in Appendix 2.

The decision about whether the owner should proceed with the investment (differential initial construction cost) must be based on the Net Present Value (NPV) criterion. That means that an investment must be made if its NPV is positive. In this study, where seven possible investments exist and only one can be chosen, the owner should decide to build the variant that presents the maximum NPV as an investment. The NPV for each one of the seven variants can be evaluated by subtracting the differential initial construction cost resulting from building a ship with bulbous bow from the PV of total savings.

An estimation for this differential initial construction cost was made by assuming that the bulbous bows will be constructed by a smeared plate (thickness 3 inches). Then the weight of the bulbous bow for each variant was calculated and using an empirical formula (taken from the USN design math model) the bulb's construction cost was estimated :

$$C_b = 0.03395 * KN_1 * F_I * W_b^{0.772} \qquad (7\text{-}4)$$

where C_b is the bulb's construction cost (million \$), KN_1 is a constant coefficient (a typical value is 0.55), F_I is a constant (2.292) that takes into account the inflation (5% annually from the base year) and W_b is the bulb's weight (Tons).

The following table exhibits the results from all the calculations and the NPV for each investment :

Variant	Bulb's Weight (Tons)	Bulb's Cost (million $)	PV of total life savings (million $)	NPV (million $)
TGC770	0,00	$ 0,00	$ 0,00	$ 0,00
# 1	3,69	$ 0,12	$ 3,83	$ 3,71
# 2	5,77	$ 0,17	$ 4,48	$ 4,31
# 3	8,30	$ 0,22	$ 6,80	$ 6,58
# 4	14,76	$ 0,34	$ 17,86	$ 17,52
# 5	23,06	$ 0,48	$ 22,29	$ 21,81
# 6	33,21	$ 0,64	$ 37,70	$ 37,06
# 7	45,20	$ 0,81	$ 49,54	$ 48,73

Table 7-2 : Net Present Value for seven different investments

Although owners who think of the short term economics may decide not to build a bulbous bow ship, because of its higher construction cost when compared to a similar ship with no bulbous bow, in this analysis the long term economic advantages (total life cycle savings discounted into present $ in Table 7-1) of building a bulbous bow (especially the larger diameter bulbs) seem indisputable. The NPV criterion finally shows the economic advantages of building variant # 7.

7.3 Total logistics cost analysis

7.3.1 Bulbous bow effect on transportation cost

Using the size of niche of potentially eligible cargoes for FastShip (36,500 FEUs for 1998) from [30] the bulbous bow effect at the total logistics cost and the stimulated demand was studied by utilizing the MIT total logistics cost model. The bulbous bow variants were considered to have a lower transportation cost which was calculated by subtracting the fuel savings per FEU resulting from the use of a bulb from the break even freight rate quoted by the owner ($ 3,500 per FEU). The resulting break even freight rates for the seven variants are shown in the following Table.

Variant	Annual savings (million $)	Freight rate ($ per FEU)
TGC770	$ 0,0	$ 3500
# 1	$ 0,5	$ 3486
# 2	$ 0,6	$ 3484
# 3	$ 0,9	$ 3475
# 4	$ 2,3	$ 3437
# 5	$ 2,9	$ 3421
# 6	$ 5,0	$ 3363
# 7	$ 6,5	$ 3322

Table 7-3 : Freight rates for variants

Significant reductions in the break even freight rates are achieved with the use of a bulbous bow and especially with the larger diameter bulbs. Furthermore, if variant #7 is finally selected to be built instead of the TGC-770 original hull form, the reduction of break even freight rate will be approximately 5% . That means that the transportation cost for products shipped with FastShip will decrease, if one of the variants with bulbous bow operates. Consequently, the total logistics cost will decrease, if all the other parameters remain the same. Figure 7-1 shows that the transportation cost is the largest contributing factor to the total logistics cost.

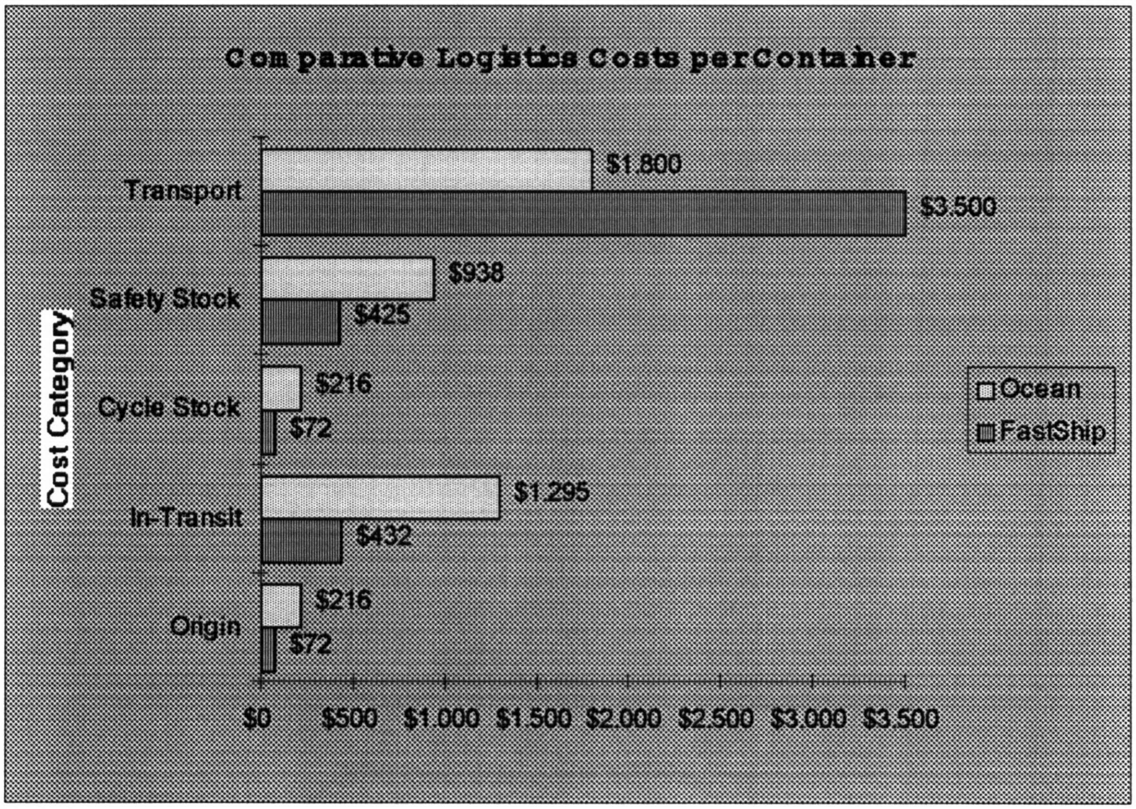

Figure 7-1 : Contributing factors to total logistics cost

Assuming that the owner decides to decrease the freight rate this would result in significant total logistics cost savings for several shippers in the Northatlantic sea trade. In addition, the latent and stimulated demand, caused by these cost savings, will increase for the new transportation service provided by FastShip Atlantic.

7.3.2 Total logistics cost model results

From the previous chapter's description of total logistics cost it is obvious that the reduction of the transportation cost (without any other change) will result in the total logistics cost reduction. Using the MIT's total logistics cost model the total logistics cost for several commodities were calculated. These calculations were made for several cases (different sets of parameters of the model) for each commodity. In Appendix 3.1 , total logistics cost model results for the TGC-770 and the seven variants with bulbous bows are presented for a specific commodity value per pound ($ 3.63). The model input set of parameters during these calculations represented the base case in the following sensitivity analysis. As it was expected, the total logistics cost savings per FEU, using any one of the seven variants instead of TGC-770, is the difference in the corresponding transportation costs, or in other words the difference of the break even freight rates. Another interesting result is that the original hull form TGC-770 and variants # 1, 2 and 3 , when compared to a representative ocean carrier, do not present total logistics cost savings for the shipment of this specific commodity. On the other hand, variants # 4, 5 , 6 and 7 present significant total logistics cost savings per FEU, with variant # 7 presenting the maximum savings.

7.3.3 Sensitivity analysis results

Using the total logistics cost model, sensitivity analyses were conducted in order to determine the effect of the various parameters on the total logistics cost savings. For all cases different sets of input parameters were used and calculations were made for a commodity value range from 1 to 50 ($/pound). The results, presented graphically in Appendix 3.2 , compare the performance of TGC-770 and variant # 7 . The results for the other six variants are not presented in the graphs for reasons of clarity, since they coincided almost exactly (although always being between the results of TGC-770 and variant #7) with the plotted results. Even the results for variant # 7 are very close to those for TGC-770, since the transportation cost differential is a small amount when compared to total logistics cost savings. Unsurprisingly, among the eight candidate hulls, variant # 7 presented in all cases the maximum total logistics cost savings when compared to representative ocean and air competitors.

The parameters that demonstrated the greatest impact on model results were commodity value and inventory carrying charge. Product density, storability, travel reliability and travel time were also found to exert significant, however less important, effects on model results. The time sensitivity (expressed in the model by the parameters shelf life, salvage value and decay parameter) also demonstrated some significant effects when varied under certain combinations of commodity and service characteristics.

The analysis showed that changes in commodity value or inventory carrying charge result in a roughly equivalent or somewhat greater percentage change in total logistics cost. For example, for the base case and for commodity value from 5 to 20 ($/pound) a 10% increase in commodity value resulted in from a 10 to 15 % increase in total logistics cost savings for both TGC-770 and variant # 7. In addition for annual carrying charges ranging from 15 to 40% per year, a 10% increase in the carrying charges resulted in from a 15 to 20% increase in total logistics cost savings.

By varying the density and storability (FEU load factor), it was also found that these parameters exert significant, but less important, effects on model results. Results varied from somewhat greater to substantially less than proportional changes in total logistics cost savings.

The time sensitivity, expressed by the input parameters of shelf life, salvage value and decay parameter, demonstrated some significant effects when varied under certain combinations of commodity and service characteristics. In general, by decreasing the shelf life under 20 days had noticeable impact on total logistics cost for TGC-770 and variant # 7. In particular, the range of commodity values for which the standard air carrier provided less total logistics cost increased with decreasing the shelf life.

7.3.4 Latent and stimulated demand

Results of the latent and stimulated demand analysis for five representative commodity groups are submitted in Appendix 3.3 . It can be seen that stimulated demand results varied significantly for each specific commodity group. Total logistics cost savings for certain commodity groups (bread, pastry etc.) exceeded 25% of commodity value, whereas for others (fresh cut flowers) the total logistics cost by using FastShip exceeded by 75% of commodity value the total logistics cost by using the air carrier. In general, the commodities for which the largest benefits accrue are relatively low value (from 0.25 to 2 $ per pound) and are quite time-sensitive, with a shelf life of three weeks, a low salvage value and a high decay parameter.

Furthermore, the results of this analysis show that the most appropriate commodity groups, such as first class mail and newspapers, certain fresh or chilled seafood, certain fresh bread, pastry etc. , may increase their trans-Atlantic demand by from 2 to 30%.

From the results, variant # 7 is expected to produce the greater stimulated demand among the seven variants and the TGC-770 original hull form which, as it was expected, produces the smallest stimulated demand. The stimulated demand for the prementioned most appropriate commodity groups increased for variant # 7 , when compared to TGC-770 by from 2 to 15%.

Chapter 8

Conclusions

A numerical design methodology to apply bow bulbs to fine-form, high-speed ships was developed in this study. The steps followed in this methodology were the following :

- Design and fair the candidate bulbs into the rest of the hull.
- Generate a surface grid of the hull and of the bulbs.
- Predict the calm water resistance and the seakeeping performance of the variants by numerical potential flow calculations.

This methodology was applied to investigate the effect of bulbous bow on resistance and seakeeping of TGC-770 : a fine-form ($C_b = 0.37$) and high-speed ship (service speed 40 knots), which is expected to enter the trans-Atlantic ocean trade at 1998. The thirteen variants, that were produced by varying cylindrical bulb's parameters, were tested by use of the SWAN code. It is important to note that all of them presented less total calm water resistance than the original TGC-770 hull form. Increases in bulb diameter tended to minimize the resistance characteristics of the ship. This trend indicates that bow bulbs should be made as large as the practical constraints associated with shiphandling will allow. On the other hand, increases in bulb length and for a constant diameter increased the total resistance of this vessel. The maximum reduction in total resistance (10%) was presented by the variant attached with the largest bulb diameter.

The seven variants, which presented the best results in total calm water resistance tests for given bulb diameter, were also tested in head seas by use of the same code. It was concluded that the bulbs tend also to upgrade the seakeeping performance of the original hull form, but only to a small degree. Nevertheless, the significant total resistance reductions indicate that serious consideration should be given to investigating the installation of a bulbous bow on future fast ships.

Finally, a cost analysis revealed the profitability of an investment to build a bulbous bow ship. Furthermore, the seven variants with the best resistance performance possess the practical advantage of short length and ease of manufacture. In addition, a total logistics cost analysis was made in order to estimate how the trans-Atlantic shippers will value the characteristics of the new service relative to representative, currently existing ocean and air carriers. The results of this analysis are very encouraging, since the total logistics cost savings for specific commodity groups provided by the new service are significant. The use of a bulbous bow variant instead of the original hull form will even more increase the cost savings, by reducing the freight rate, and will also result in an increased stimulated demand. Competitive responses would be very difficult to overcome FastShip's advantages in frequency, speed and reliability.

Bibliography

[1] A.M. Kracht. Design of bulbous bows. Transactions SNAME , Vol. 86, pp.197-217, 1978.

[2] B. Yim. A simple design theory and method for bulbous bows of ships. Journal of Ship Research, Vol.18, No.3, pp. 141-152, 1974.

[3] T. Inui. Wave making resistance of ships. Transactions SNAME, Vol. 70, pp. 283-353, 1964.

[4] W. C. Wigley. The theory of bulbous bow and its practical application. Trans. NECIES, Vol. 52, pp. 65-88, 1936.

[5] T. Inui, T. Takahei, M. Kumano. Three recent papers by Japanese authors on the effect of bulbs on wave-making resistance of ships. Translated by F.C. Michelsen and H.C. Kim, University of Michigan, Dept. of Naval Architecture and Marine Engineering, Ann Arbor, Dec. 1961.

[6] T.H. Havelock. Wave patterns and wave resistance. Transactions I.N.A., Vol. 75, 1934.

[7] T.H. Havelock. The calculation of wave resistance. Proc. of the Royal Society, London, England. Series A, Vol. 144, 1934.

[8] W.P.A. Van Lammeren and IR.R. Wahab. Research on bulbous bow ships, Part 1A ; Still water investigations into bulbous bow forms for a fast cargo liner. Report No. 74S. Netherlands Research Centre T.N.O. for Shipbuilding and Navigation, Oct. 1965.

[9] R. B. Couch and J.L. Moss. Application of large protruding bulbs to ships of high block coefficient. Transactions SNAME, Vol. 74, 1966.

[10] E.S. Dillon and E.V. Lewis. Ships with bulbous bows in smooth water and in waves. Transactions SNAME, Vol. 63, 1955.

[11] W.P.A. Van Lammeren and F.V.A. Pangalila. Research on bulbous bow ships, Part 2B ; Behavior of a 24,000 DWT bulkcarrier with a large bulbous bow in a seaway. International Shipbuilding Progress, Vol. 13, No 137, Jan. 1966.

[12] W.E. Smith and N. Salvesen. Comparison of ship motion theory and experiment for destroyer with large bulbs. Journal of Ship Research, pp. 67-76, March 1970.

[13] C. Stromgren. A comparison of alternative bow configurations. Marine Technology, SNAME, Vol.32, No 3, pp. 224-230, July 1995.

[14] H.H. Valkhof and E. Minguito. Shuttle tanker design problems solved by CFD-Code DAWSON. Transactions SNAME, Vol. 102, pp. 71-85, 1994.

[15] D.S. Doust. Trawler forms with bulbous bows. Fishing Boats of the World : 2, FAO, Rome 1967, pp. 445-452.

[16] A.D. Heliotis. The effect of bulbous bow retrofits on the resistance and seakeeping performance of fishing vessels. Master of Science Thesis, MIT, Dept. of Ocean Engineering, Jan. 1985.

[17] J.W. Hoyle, B.H. Cheng, B. Hays, B. Johnson and B. Nehrling. A bulbous bow design methodology for high-speed ships. Transactions SNAME, Vol. 94, pp. 31-56, 1986.

[18] AUTOSHIP, Basic Package, 14th edition, Nov. 1990.

[19] SWAN-1 : A computer program for three-dimensional ship wave analysis. Version 2.2, 1994.

[20] P.D. Sclavounos and D.E. Nakos. Seakeeping and added resistance of IACC yachts by a three-dimensional panel method.11th Chesapeake Sailing Yacht Symposium, Annapolis, Jan. 1993.

[21] P.D. Sclavounos. Computation of wave ship interactions. MIT, Dept. of Ocean Engineering, 1995.

[22] E.V. Lewis. Principles of Naval Architecture. SNAME, 1988.

[23] H.E. Saunders. Hydrodynamics in Ship Design. SNAME, 1965.

[24] A. Παπανικολαου. Μελετη πλοιου – Τομοs A : Μεθοδολογια προμελετηs. Αθηνα 1989.

[25] D. Kring and P.D. Sclavounos. Hydrodynamic analysis with code SWAN of FastShip TGC-770. MIT, Dept. of Ocean Engineering, Report No. LSPF-95-5, Aug. 1995.

[26] SSPA Maritime Consulting. Hull form alternative with a bow bulb - Numerical flow calculations. Report 6941-10, Feb. 1996.

[27] V. Martinot-Lagarde. An integral turbulent boundary-layer method and the residuary resistance of ships. Master of Science Thesis, MIT, Dept. of Ocean Engineering, Sep. 1991.

[28] J.N. Newman. Marine hydrodynamics. MIT Press, Cambridge, Massachusetts,1992.

[29] MIT - Center for Transportation Studies. Phase I Report : Marketing Analysis for FastShip Atlantic. June 1995.

[30] FastShip Atlantic , Inc. . Discussion of the high value, time sensitive cargo market for FastShip's service on the North Atlantic. Presentation to the Maritime Administration, June 1995.

[31] R.A. Brealey and S.C. Myers. Principles of corporate finance. Fourth edition, McGraw-Hill, Inc., 1991.

[32] R.C. Higgins. Analysis for financial management. Third edition, IRWIN, 1992.

[33] D.B. Lewis. Freight Mode Choice : Air transport versus ocean transport in the 1990s. Master of Science Thesis, MIT, Dept. of Ocean Engineering, Jan. 1995.

Appendix 1

Panelized underwater hull forms

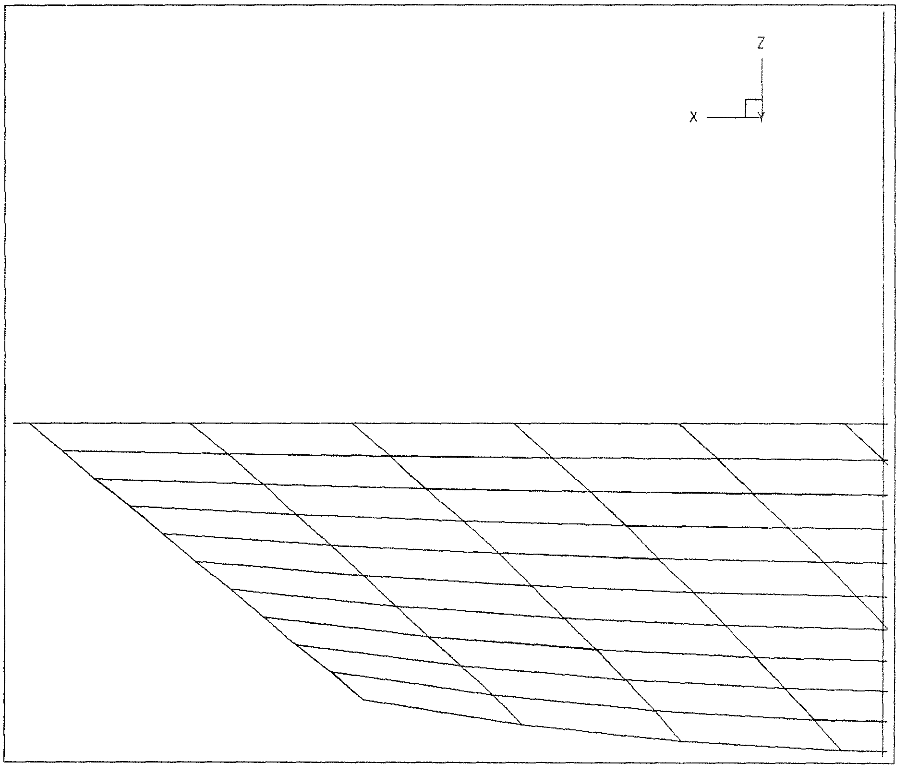

Figure A1-1 : TGC-770 underwater hull geometry

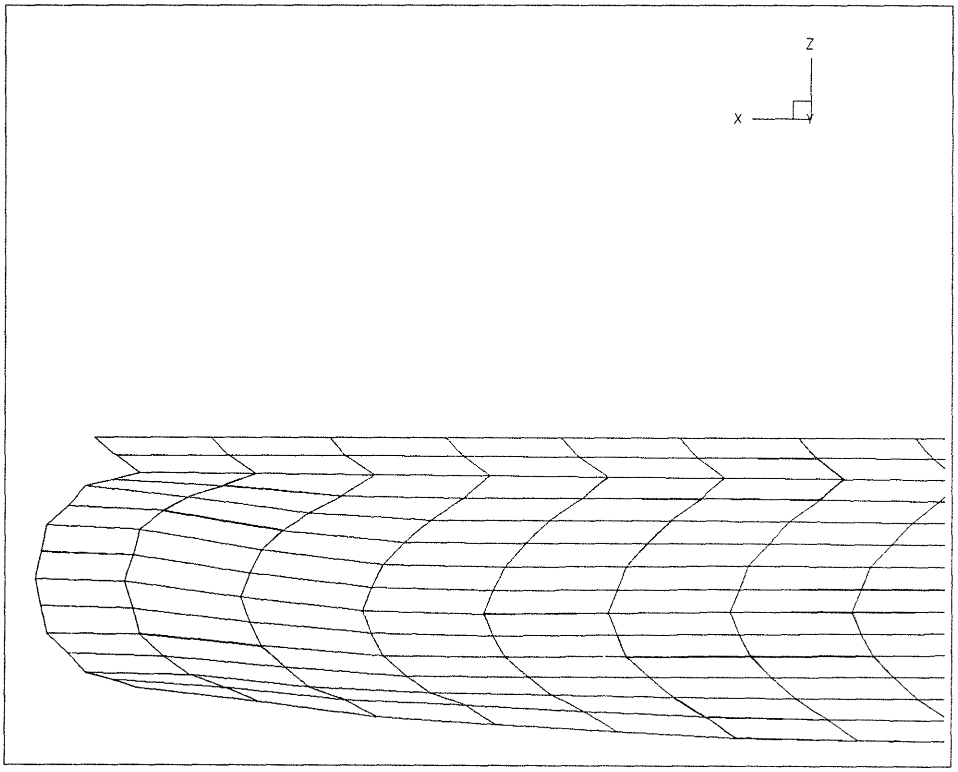

Figure A1-2 : Variant # 7 underwater hull geometry

Appendix 2

Cost of capital sensitivity analysis

Variant	**Annual savings (million $)**	**Present Value of total life savings (million $)**		
		i=5%	**i=8%**	**i=10%**
TGC770	$ 0,00	$ 0,00	$ 0,00	$ 0,00
# 1	$ 0,50	$ 5,23	$ 4,31	$ 3,83
# 2	$ 0,59	$ 6,11	$ 5,04	$ 4,48
# 3	$ 0,89	$ 9,28	$ 7,65	$ 6,80
# 4	$ 2,35	$ 24,38	$ 20,10	$ 17,86
# 5	$ 2,93	$ 30,43	$ 25,09	$ 22,29
# 6	$ 4,96	$ 51,45	$ 42,43	$ 37,70
# 7	$ 6,51	$ 67,61	$ 55,75	$ 49,54

Appendix 3

Total logistics cost analysis

A3.1 : Models of FastShip competitive advantages for shippers

TOTAL LOGISTICS COST ANALYSIS MODEL

MODEL INPUTS

$3,63	Value Per Pound
10,7	Density of Stowage (lb/cu.ft.)
22,5%	Annual Carrying Charge
365	Demand Period (days)
4.563	Period Demand (tonnes)
365	Shelf Life (days)
100%	Per Cent Salvage Value
3	Perish/Decay parameter
94%	FastShip/Ocean Price Premium
$0	Warehouse Cost/lb/year
1,50	Coef. of Var. of Product Demand
85%	Container Space Used
40	Container Length (ft)
8	Container Width (ft)
9,5	Container Height (ft)

Ocean

$1.800	Transportation Cost/Container
21	Average Trip Time (days)
3,15	Std. Dev. of Trip Time (days)
3,00	Std. Deviations for Safety Stock
52	Shipments per Demand Period

FastShip

$3.500	Transportation Cost/Container
7	Average Trip Time (days)
0,17	Std. Dev. of Trip Time (days)
3,00	Std. Deviations for Safety Stock
156	Shipments per Demand Period

Summary Output:	Fast Ship	Ocean	Rate Premium:		Savings:	w/prem.	without
cost per container:	$4.501	$4.465	$1.700	94%		($36)	$1.664

CALCULATED CONTAINER CHARACTERISTICS

943.160	Cubic ft. Annual Demand	365	Containers Demand in Period
2.584	Cubic ft. Used per Container	$100.000,00	Value per Container
12,5	Cargo Wght. per Cont. (tonnes)	$36.500.000	Period Value of Commodity

DETAILED MODEL OUTPUT - OCEAN

52	Shipments per Demand Period	7,0	Average Shipment Size
$0	Perishable Cost / Cont.	$0	Annual Perish Costs
$0	Origin Warehouse / Cont	$0	Annual Origin Warehouse Costs
$216	Origin Inventory / Cont.	$78.966	Annual Origin Inventory Costs
$1.295	In-Transit Inventory / Cont.	$472.500	Annual In-Transit Inventory Costs
$216	Dest. Cycle Inventory / Cont.	$78.966	Annual Dest. Cycle Inventory Costs
$938	Safety Stock / Cont.	$342.297	Annual Safety Stock Costs
$2.665	Interest & Perish Costs / Cont.	$972.730	Annual Interest & Perish Costs
$1.800	Transportation Cost / Cont.	$657.000	Annual Transportation Costs
$4.465	**Total Cost per Container**	$1.629.730	**Annual Total Logistics Cost**

DETAILED MODEL OUTPUT - FASTSHIP

156	Shipments per Demand Period	2,3	Average Shipment Size
$0	Perishable Cost / Cont.	$0	Annual Perish Costs
$0	Origin Warehouse / Cont	$0	Annual Origin Warehouse Costs
$72	Origin Inventory / Cont.	$26.322	Annual Origin Inventory Costs
$432	In-Transit Inventory / Cont.	$157.500	Annual In-Transit Inventory Costs
$72	Dest. Cycle Inventory / Cont.	$26.322	Annual Dest. Cycle Inventory Costs
$425	Safety Stock / Cont.	$155.282	Annual Safety Stock Costs
$1.001	Interest & Perish Costs / Cont.	$365.427	Annual Interest & Perish Costs
$3.500	Transportation Cost / Cont.	$1.277.500	Annual Transportation Costs
$4.501	**Total Cost per Container**	$1.642.927	**Annual Total Logistics Cost**

TOTAL LOGISTICS COST ANALYSIS MODEL

MODEL INPUTS

$3,63	Value Per Pound
10,7	Density of Stowage (lb/cu.ft.)
22,5%	Annual Carrying Charge
365	Demand Period (days)
4.563	Period Demand (tonnes)
365	Shelf Life (days)
100%	Per Cent Salvage Value
3	Perish/Decay parameter
94%	FastShip/Ocean Price Premium
$0	Warehouse Cost/lb/year
1,50	Coef. of Var. of Product Demand
85%	Container Space Used
40	Container Length (ft)
8	Container Width (ft)
9,5	Container Height (ft)

Ocean

$1.800	Transportation Cost/Container
21	Average Trip Time (days)
3,15	Std. Dev. of Trip Time (days)
3,00	Std. Deviations for Safety Stock
52	Shipments per Demand Period

FastShip

$3.486	Transportation Cost/Container
7	Average Trip Time (days)
0,17	Std. Dev. of Trip Time (days)
3,00	Std. Deviations for Safety Stock
156	Shipments per Demand Period

Summary Output:	Fast Ship	Ocean	Rate Premium:		Savings:	w/prem.	without
cost per container:	$4.487	$4.465	$1.686	94%		($22)	$1.664

CALCULATED CONTAINER CHARACTERISTICS

943.160	Cubic ft. Annual Demand	365	Containers Demand in Period
2.584	Cubic ft. Used per Container	$100.000,00	Value per Container
12,5	Cargo Wght. per Cont. (tonnes)	$36.500.000	Period Value of Commodity

DETAILED MODEL OUTPUT - OCEAN

52	Shipments per Demand Period	7,0	Average Shipment Size
$0	Perishable Cost / Cont.	$0	Annual Perish Costs
$0	Origin Warehouse / Cont	$0	Annual Origin Warehouse Costs
$216	Origin Inventory / Cont.	$78.966	Annual Origin Inventory Costs
$1.295	In-Transit Inventory / Cont.	$472.500	Annual In-Transit Inventory Costs
$216	Dest. Cycle Inventory / Cont.	$78.966	Annual Dest. Cycle Inventory Costs
$938	Safety Stock / Cont.	$342.297	Annual Safety Stock Costs
$2.665	Interest & Perish Costs / Cont.	$972.730	Annual Interest & Perish Costs
$1.800	Transportation Cost / Cont.	$657.000	Annual Transportation Costs
$4.465	**Total Cost per Container**	$1.629.730	**Annual Total Logistics Cost**

DETAILED MODEL OUTPUT - FASTSHIP

156	Shipments per Demand Period	2,3	Average Shipment Size
$0	Perishable Cost / Cont.	$0	Annual Perish Costs
$0	Origin Warehouse / Cont	$0	Annual Origin Warehouse Costs
$72	Origin Inventory / Cont.	$26.322	Annual Origin Inventory Costs
$432	In-Transit Inventory / Cont.	$157.500	Annual In-Transit Inventory Costs
$72	Dest. Cycle Inventory / Cont.	$26.322	Annual Dest. Cycle Inventory Costs
$425	Safety Stock / Cont.	$155.282	Annual Safety Stock Costs
$1.001	Interest & Perish Costs / Cont.	$365.427	Annual Interest & Perish Costs
$3.486	Transportation Cost / Cont.	$1.272.390	Annual Transportation Costs
$4.487	**Total Cost per Container**	$1.637.817	**Annual Total Logistics Cost**

TOTAL LOGISTICS COST ANALYSIS MODEL

MODEL INPUTS

$3,63	Value Per Pound
10,7	Density of Stowage (lb/cu.ft.)
22,5%	Annual Carrying Charge
365	Demand Period (days)
4.563	Period Demand (tonnes)
365	Shelf Life (days)
100%	Per Cent Salvage Value
3	Perish/Decay parameter
94%	FastShip/Ocean Price Premium
$0	Warehouse Cost/lb/year
1,50	Coef. of Var. of Product Demand
85%	Container Space Used
40	Container Length (ft)
8	Container Width (ft)
9,5	Container Height (ft)

Ocean

$1.800	Transportation Cost/Container
21	Average Trip Time (days)
3,15	Std. Dev. of Trip Time (days)
3,00	Std. Deviations for Safety Stock
52	Shipments per Demand Period

FastShip

$3.484	Transportation Cost/Container
7	Average Trip Time (days)
0,17	Std. Dev. of Trip Time (days)
3,00	Std. Deviations for Safety Stock
156	Shipments per Demand Period

Summary Output:	Fast Ship	Ocean	Rate Premium:		Savings:	w/prem.	without
cost per container:	$4.485	$4.465	$1.684	94%		($20)	$1.664

CALCULATED CONTAINER CHARACTERISTICS

943.160	Cubic ft. Annual Demand	365	Containers Demand in Period
2.584	Cubic ft. Used per Container	$100.000,00	Value per Container
12,5	Cargo Wght. per Cont. (tonnes)	$36.500.000	Period Value of Commodity

DETAILED MODEL OUTPUT - OCEAN

52	Shipments per Demand Period	7,0	Average Shipment Size
$0	Perishable Cost / Cont.	$0	Annual Perish Costs
$0	Origin Warehouse / Cont	$0	Annual Origin Warehouse Costs
$216	Origin Inventory / Cont.	$78.966	Annual Origin Inventory Costs
$1.295	In-Transit Inventory / Cont.	$472.500	Annual In-Transit Inventory Costs
$216	Dest. Cycle Inventory / Cont.	$78.966	Annual Dest. Cycle Inventory Costs
$938	Safety Stock / Cont.	$342.297	Annual Safety Stock Costs
$2.665	Interest & Perish Costs / Cont.	$972.730	Annual Interest & Perish Costs
$1.800	Transportation Cost / Cont.	$657.000	Annual Transportation Costs
$4.465	**Total Cost per Container**	$1.629.730	**Annual Total Logistics Cost**

DETAILED MODEL OUTPUT - FASTSHIP

156	Shipments per Demand Period	2,3	Average Shipment Size
$0	Perishable Cost / Cont.	$0	Annual Perish Costs
$0	Origin Warehouse / Cont	$0	Annual Origin Warehouse Costs
$72	Origin Inventory / Cont.	$26.322	Annual Origin Inventory Costs
$432	In-Transit Inventory / Cont.	$157.500	Annual In-Transit Inventory Costs
$72	Dest. Cycle Inventory / Cont.	$26.322	Annual Dest. Cycle Inventory Costs
$425	Safety Stock / Cont.	$155.282	Annual Safety Stock Costs
$1.001	Interest & Perish Costs / Cont.	$365.427	Annual Interest & Perish Costs
$3.484	Transportation Cost / Cont.	$1.271.660	Annual Transportation Costs
$4.485	**Total Cost per Container**	$1.637.087	**Annual Total Logistics Cost**

TOTAL LOGISTICS COST ANALYSIS MODEL

MODEL INPUTS

$3,63	Value Per Pound
10,7	Density of Stowage (lb/cu.ft.)
22,5%	Annual Carrying Charge
365	Demand Period (days)
4.563	Period Demand (tonnes)
365	Shelf Life (days)
100%	Per Cent Salvage Value
3	Perish/Decay parameter
93%	FastShip/Ocean Price Premium
$0	Warehouse Cost/lb/year
1,50	Coef. of Var. of Product Demand
85%	Container Space Used
40	Container Length (ft)
8	Container Width (ft)
9,5	Container Height (ft)

Ocean

$1.800	Transportation Cost/Container
21	Average Trip Time (days)
3,15	Std. Dev. of Trip Time (days)
3,00	Std. Deviations for Safety Stock
52	Shipments per Demand Period

FastShip

$3.475	Transportation Cost/Container
7	Average Trip Time (days)
0,17	Std. Dev. of Trip Time (days)
3,00	Std. Deviations for Safety Stock
156	Shipments per Demand Period

Summary Output:	Fast Ship	Ocean	Rate Premium:		Savings:	w/prem.	without
cost per container:	$4.476	$4.465	$1.675	93%		($11)	$1.664

CALCULATED CONTAINER CHARACTERISTICS

943.160	Cubic ft. Annual Demand	365	Containers Demand in Period
2.584	Cubic ft. Used per Container	$100.000,00	Value per Container
12,5	Cargo Wght. per Cont. (tonnes)	$36.500.000	Period Value of Commodity

DETAILED MODEL OUTPUT - OCEAN

52	Shipments per Demand Period	7,0	Average Shipment Size
$0	Perishable Cost / Cont.	$0	Annual Perish Costs
$0	Origin Warehouse / Cont	$0	Annual Origin Warehouse Costs
$216	Origin Inventory / Cont.	$78.966	Annual Origin Inventory Costs
$1.295	In-Transit Inventory / Cont.	$472.500	Annual In-Transit Inventory Costs
$216	Dest. Cycle Inventory / Cont.	$78.966	Annual Dest. Cycle Inventory Costs
$938	Safety Stock / Cont.	$342.297	Annual Safety Stock Costs
$2.665	Interest & Perish Costs / Cont.	$972.730	Annual Interest & Perish Costs
$1.800	Transportation Cost / Cont.	$657.000	Annual Transportation Costs
$4.465	**Total Cost per Container**	$1.629.730	**Annual Total Logistics Cost**

DETAILED MODEL OUTPUT - FASTSHIP

156	Shipments per Demand Period	2,3	Average Shipment Size
$0	Perishable Cost / Cont.	$0	Annual Perish Costs
$0	Origin Warehouse / Cont	$0	Annual Origin Warehouse Costs
$72	Origin Inventory / Cont.	$26.322	Annual Origin Inventory Costs
$432	In-Transit Inventory / Cont.	$157.500	Annual In-Transit Inventory Costs
$72	Dest. Cycle Inventory / Cont.	$26.322	Annual Dest. Cycle Inventory Costs
$425	Safety Stock / Cont.	$155.282	Annual Safety Stock Costs
$1.001	Interest & Perish Costs / Cont.	$365.427	Annual Interest & Perish Costs
$3.475	Transportation Cost / Cont.	$1.268.375	Annual Transportation Costs
$4.476	**Total Cost per Container**	$1.633.802	**Annual Total Logistics Cost**

TOTAL LOGISTICS COST ANALYSIS MODEL

MODEL INPUTS

$3,63	Value Per Pound
10,7	Density of Stowage (lb/cu.ft.)
22,5%	Annual Carrying Charge
365	Demand Period (days)
4.563	Period Demand (tonnes)
365	Shelf Life (days)
100%	Per Cent Salvage Value
3	Perish/Decay parameter
91%	FastShip/Ocean Price Premium
$0	Warehouse Cost/lb/year
1,50	Coef. of Var. of Product Demand
85%	Container Space Used
40	Container Length (ft)
8	Container Width (ft)
9,5	Container Height (ft)

Ocean

$1.800	Transportation Cost/Container
21	Average Trip Time (days)
3,15	Std. Dev. of Trip Time (days)
3,00	Std. Deviations for Safety Stock
52	Shipments per Demand Period

FastShip

$3.437	Transportation Cost/Container
7	Average Trip Time (days)
0,17	Std. Dev. of Trip Time (days)
3,00	Std. Deviations for Safety Stock
156	Shipments per Demand Period

Summary Output:	**Fast Ship**	**Ocean**	**Rate Premium:**		**Savings:**	**w/prem.**	**without**
cost per container:	**$4.438**	**$4.465**	**$1.637**	**91%**		**$27**	**$1.664**

CALCULATED CONTAINER CHARACTERISTICS

943.160	Cubic ft. Annual Demand	365	Containers Demand in Period
2.584	Cubic ft. Used per Container	$100.000,00	Value per Container
12,5	Cargo Wght. per Cont. (tonnes)	$36.500.000	Period Value of Commodity

DETAILED MODEL OUTPUT - OCEAN

52	Shipments per Demand Period	7,0	Average Shipment Size
$0	Perishable Cost / Cont.	$0	Annual Perish Costs
$0	Origin Warehouse / Cont	$0	Annual Origin Warehouse Costs
$216	Origin Inventory / Cont.	$78.966	Annual Origin Inventory Costs
$1.295	In-Transit Inventory / Cont.	$472.500	Annual In-Transit Inventory Costs
$216	Dest. Cycle Inventory / Cont.	$78.966	Annual Dest. Cycle Inventory Costs
$938	Safety Stock / Cont.	$342.297	Annual Safety Stock Costs
$2.665	Interest & Perish Costs / Cont.	$972.730	Annual Interest & Perish Costs
$1.800	Transportation Cost / Cont.	$657.000	Annual Transportation Costs
$4.465	**Total Cost per Container**	$1.629.730	**Annual Total Logistics Cost**

DETAILED MODEL OUTPUT - FASTSHIP

156	Shipments per Demand Period	2,3	Average Shipment Size
$0	Perishable Cost / Cont.	$0	Annual Perish Costs
$0	Origin Warehouse / Cont	$0	Annual Origin Warehouse Costs
$72	Origin Inventory / Cont.	$26.322	Annual Origin Inventory Costs
$432	In-Transit Inventory / Cont.	$157.500	Annual In-Transit Inventory Costs
$72	Dest. Cycle Inventory / Cont.	$26.322	Annual Dest. Cycle Inventory Costs
$425	Safety Stock / Cont.	$155.282	Annual Safety Stock Costs
$1.001	Interest & Perish Costs / Cont.	$365.427	Annual Interest & Perish Costs
$3.437	Transportation Cost / Cont.	$1.254.505	Annual Transportation Costs
$4.438	**Total Cost per Container**	$1.619.932	**Annual Total Logistics Cost**

TOTAL LOGISTICS COST ANALYSIS MODEL

MODEL INPUTS

$3,63	Value Per Pound
10,7	Density of Stowage (lb/cu.ft.)
22,5%	Annual Carrying Charge
365	Demand Period (days)
4.563	Period Demand (tonnes)
365	Shelf Life (days)
100%	Per Cent Salvage Value
3	Perish/Decay parameter
90%	FastShip/Ocean Price Premium
$0	Warehouse Cost/lb/year
1,50	Coef. of Var. of Product Demand
85%	Container Space Used
40	Container Length (ft)
8	Container Width (ft)
9,5	Container Height (ft)

Ocean

$1.800	Transportation Cost/Container
21	Average Trip Time (days)
3,15	Std. Dev. of Trip Time (days)
3,00	Std. Deviations for Safety Stock
52	Shipments per Demand Period

FastShip

$3.421	Transportation Cost/Container
7	Average Trip Time (days)
0,17	Std. Dev. of Trip Time (days)
3,00	Std. Deviations for Safety Stock
156	Shipments per Demand Period

Summary Output:	Fast Ship	Ocean	Rate Premium:		Savings:	w/prem.	without
cost per container:	$4.422	$4.465	$1.621	90%		$43	$1.664

CALCULATED CONTAINER CHARACTERISTICS

943.160	Cubic ft. Annual Demand	365	Containers Demand in Period
2.584	Cubic ft. Used per Container	$100.000,00	Value per Container
12,5	Cargo Wght. per Cont. (tonnes)	$36.500.000	Period Value of Commodity

DETAILED MODEL OUTPUT - OCEAN

52	Shipments per Demand Period	7,0	Average Shipment Size
$0	Perishable Cost / Cont.	$0	Annual Perish Costs
$0	Origin Warehouse / Cont	$0	Annual Origin Warehouse Costs
$216	Origin Inventory / Cont.	$78.966	Annual Origin Inventory Costs
$1.295	In-Transit Inventory / Cont.	$472.500	Annual In-Transit Inventory Costs
$216	Dest. Cycle Inventory / Cont.	$78.966	Annual Dest. Cycle Inventory Costs
$938	Safety Stock / Cont.	$342.297	Annual Safety Stock Costs
$2.665	Interest & Perish Costs / Cont.	$972.730	Annual Interest & Perish Costs
$1.800	Transportation Cost / Cont.	$657.000	Annual Transportation Costs
$4.465	**Total Cost per Container**	$1.629.730	**Annual Total Logistics Cost**

DETAILED MODEL OUTPUT - FASTSHIP

156	Shipments per Demand Period	2,3	Average Shipment Size
$0	Perishable Cost / Cont.	$0	Annual Perish Costs
$0	Origin Warehouse / Cont	$0	Annual Origin Warehouse Costs
$72	Origin Inventory / Cont.	$26.322	Annual Origin Inventory Costs
$432	In-Transit Inventory / Cont.	$157.500	Annual In-Transit Inventory Costs
$72	Dest. Cycle Inventory / Cont.	$26.322	Annual Dest. Cycle Inventory Costs
$425	Safety Stock / Cont.	$155.282	Annual Safety Stock Costs
$1.001	Interest & Perish Costs / Cont.	$365.427	Annual Interest & Perish Costs
$3.421	Transportation Cost / Cont.	$1.248.665	Annual Transportation Costs
$4.422	**Total Cost per Container**	$1.614.092	**Annual Total Logistics Cost**

TOTAL LOGISTICS COST ANALYSIS MODEL

MODEL INPUTS

$3,63	Value Per Pound
10,7	Density of Stowage (lb/cu.ft.)
22,5%	Annual Carrying Charge
365	Demand Period (days)
4.563	Period Demand (tonnes)
365	Shelf Life (days)
100%	Per Cent Salvage Value
3	Perish/Decay parameter
87%	FastShip/Ocean Price Premium
$0	Warehouse Cost/lb/year
1,50	Coef. of Var. of Product Demand
85%	Container Space Used
40	Container Length (ft)
8	Container Width (ft)
9,5	Container Height (ft)

Ocean

$1.800	Transportation Cost/Container
21	Average Trip Time (days)
3,15	Std. Dev. of Trip Time (days)
3,00	Std. Deviations for Safety Stock
52	Shipments per Demand Period

FastShip

$3.363	Transportation Cost/Container
7	Average Trip Time (days)
0,17	Std. Dev. of Trip Time (days)
3,00	Std. Deviations for Safety Stock
156	Shipments per Demand Period

Summary Output:	Fast Ship	Ocean	Rate Premium:		Savings:	w/prem.	without
cost per container:	$4.364	$4.465	$1.563	87%		$101	$1.664

CALCULATED CONTAINER CHARACTERISTICS

943.160	Cubic ft. Annual Demand
2.584	Cubic ft. Used per Container
12,5	Cargo Wght. per Cont. (tonnes)

365	Containers Demand in Period
$100.000,00	Value per Container
$36.500.000	Period Value of Commodity

DETAILED MODEL OUTPUT - OCEAN

52	Shipments per Demand Period	7,0	Average Shipment Size

$0	Perishable Cost / Cont.	$0	Annual Perish Costs
$0	Origin Warehouse / Cont	$0	Annual Origin Warehouse Costs
$216	Origin Inventory / Cont.	$78.966	Annual Origin Inventory Costs
$1.295	In-Transit Inventory / Cont.	$472.500	Annual In-Transit Inventory Costs
$216	Dest. Cycle Inventory / Cont.	$78.966	Annual Dest. Cycle Inventory Costs
$938	Safety Stock / Cont.	$342.297	Annual Safety Stock Costs
$2.665	Interest & Perish Costs / Cont.	$972.730	Annual Interest & Perish Costs
$1.800	Transportation Cost / Cont.	$657.000	Annual Transportation Costs
$4.465	**Total Cost per Container**	$1.629.730	**Annual Total Logistics Cost**

DETAILED MODEL OUTPUT - FASTSHIP

156	Shipments per Demand Period	2,3	Average Shipment Size

$0	Perishable Cost / Cont.	$0	Annual Perish Costs
$0	Origin Warehouse / Cont	$0	Annual Origin Warehouse Costs
$72	Origin Inventory / Cont.	$26.322	Annual Origin Inventory Costs
$432	In-Transit Inventory / Cont.	$157.500	Annual In-Transit Inventory Costs
$72	Dest. Cycle Inventory / Cont.	$26.322	Annual Dest. Cycle Inventory Costs
$425	Safety Stock / Cont.	$155.282	Annual Safety Stock Costs
$1.001	Interest & Perish Costs / Cont.	$365.427	Annual Interest & Perish Costs
$3.363	Transportation Cost / Cont.	$1.227.495	Annual Transportation Costs
$4.364	**Total Cost per Container**	$1.592.922	**Annual Total Logistics Cost**

TOTAL LOGISTICS COST ANALYSIS MODEL

MODEL INPUTS

$3,63	Value Per Pound
10,7	Density of Stowage (lb/cu.ft.)
22,5%	Annual Carrying Charge
365	Demand Period (days)
4.563	Period Demand (tonnes)
365	Shelf Life (days)
100%	Per Cent Salvage Value
3	Perish/Decay parameter
85%	FastShip/Ocean Price Premium
$0	Warehouse Cost/lb/year
1,50	Coef. of Var. of Product Demand
85%	Container Space Used
40	Container Length (ft)
8	Container Width (ft)
9,5	Container Height (ft)

Ocean

$1.800	Transportation Cost/Container
21	Average Trip Time (days)
3,15	Std. Dev. of Trip Time (days)
3,00	Std. Deviations for Safety Stock
52	Shipments per Demand Period

FastShip

$3.322	Transportation Cost/Container
7	Average Trip Time (days)
0,17	Std. Dev. of Trip Time (days)
3,00	Std. Deviations for Safety Stock
156	Shipments per Demand Period

Summary Output:	**Fast Ship**	**Ocean**	**Rate Premium:**		**Savings:**	**w/prem.**	**without**
cost per container:	**$4.323**	**$4.465**	**$1.522**	**85%**		**$142**	**$1.664**

CALCULATED CONTAINER CHARACTERISTICS

943.160	Cubic ft. Annual Demand	365	Containers Demand in Period
2.584	Cubic ft. Used per Container	$100.000,00	Value per Container
12,5	Cargo Wght. per Cont. (tonnes)	$36.500.000	Period Value of Commodity

DETAILED MODEL OUTPUT - OCEAN

52	Shipments per Demand Period	7,0	Average Shipment Size
$0	Perishable Cost / Cont.	$0	Annual Perish Costs
$0	Origin Warehouse / Cont	$0	Annual Origin Warehouse Costs
$216	Origin Inventory / Cont.	$78.966	Annual Origin Inventory Costs
$1.295	In-Transit Inventory / Cont.	$472.500	Annual In-Transit Inventory Costs
$216	Dest. Cycle Inventory / Cont.	$78.966	Annual Dest. Cycle Inventory Costs
$938	Safety Stock / Cont.	$342.297	Annual Safety Stock Costs
$2.665	Interest & Perish Costs / Cont.	$972.730	Annual Interest & Perish Costs
$1.800	Transportation Cost / Cont.	$657.000	Annual Transportation Costs
$4.465	**Total Cost per Container**	$1.629.730	**Annual Total Logistics Cost**

DETAILED MODEL OUTPUT - FASTSHIP

156	Shipments per Demand Period	2,3	Average Shipment Size
$0	Perishable Cost / Cont.	$0	Annual Perish Costs
$0	Origin Warehouse / Cont	$0	Annual Origin Warehouse Costs
$72	Origin Inventory / Cont.	$26.322	Annual Origin Inventory Costs
$432	In-Transit Inventory / Cont.	$157.500	Annual In-Transit Inventory Costs
$72	Dest. Cycle Inventory / Cont.	$26.322	Annual Dest. Cycle Inventory Costs
$425	Safety Stock / Cont.	$155.282	Annual Safety Stock Costs
$1.001	Interest & Perish Costs / Cont.	$365.427	Annual Interest & Perish Costs
$3.322	Transportation Cost / Cont.	$1.212.530	Annual Transportation Costs
$4.323	**Total Cost per Container**	$1.577.957	**Annual Total Logistics Cost**

A3.2 : Sensitivity analysis results

TOTAL LOGISTICS COST MODEL: SENSITIVITY ANALYSIS
BASE CASE

FEUs Shipped (Actual)	365
Density (lb. / Cu.Ft.)	10.7
Value Density ($ / lb.)	$1 - $50
Cubic Value ($ / Cu.Ft.)	$11 - $533
Tons per FEU	12.5
Lbs. per FEU	27,558
Value per FEU	$27,558 +
Annual Carrying Charge	22.5%
Demand Period	365
Shelf Life (Days)	365
Salvage Value	100%
Decay Parameter	3.0
Std. Devs. for Safety Stock	3.00
Warehouse Cost ($ / lb. / year)	$0.00
Storability (FEU load Factor)	85%

Standard Ocean	Freight Rate / FEU	$1,800
	Transit Time (days)	21.0
	Std. Dev. of Transit Time	3.15
	Service Freq.	52
	Avg. Shipment Size	7.0
Standard Air Freight	Freight Rate / FEU	$12,600
	Transit Time (days)	3.0
	Std. Dev. of Transit Time	0.50
	Service Freq.	365
	Avg. Shipment Size	1.0
FastShip	Freight Rate / FEU	$1,800
	Transit Time (days)	7.0
	Std. Dev. of Transit Time	0.17
	Service Freq.	156
	Avg. Shipment Size	2.3

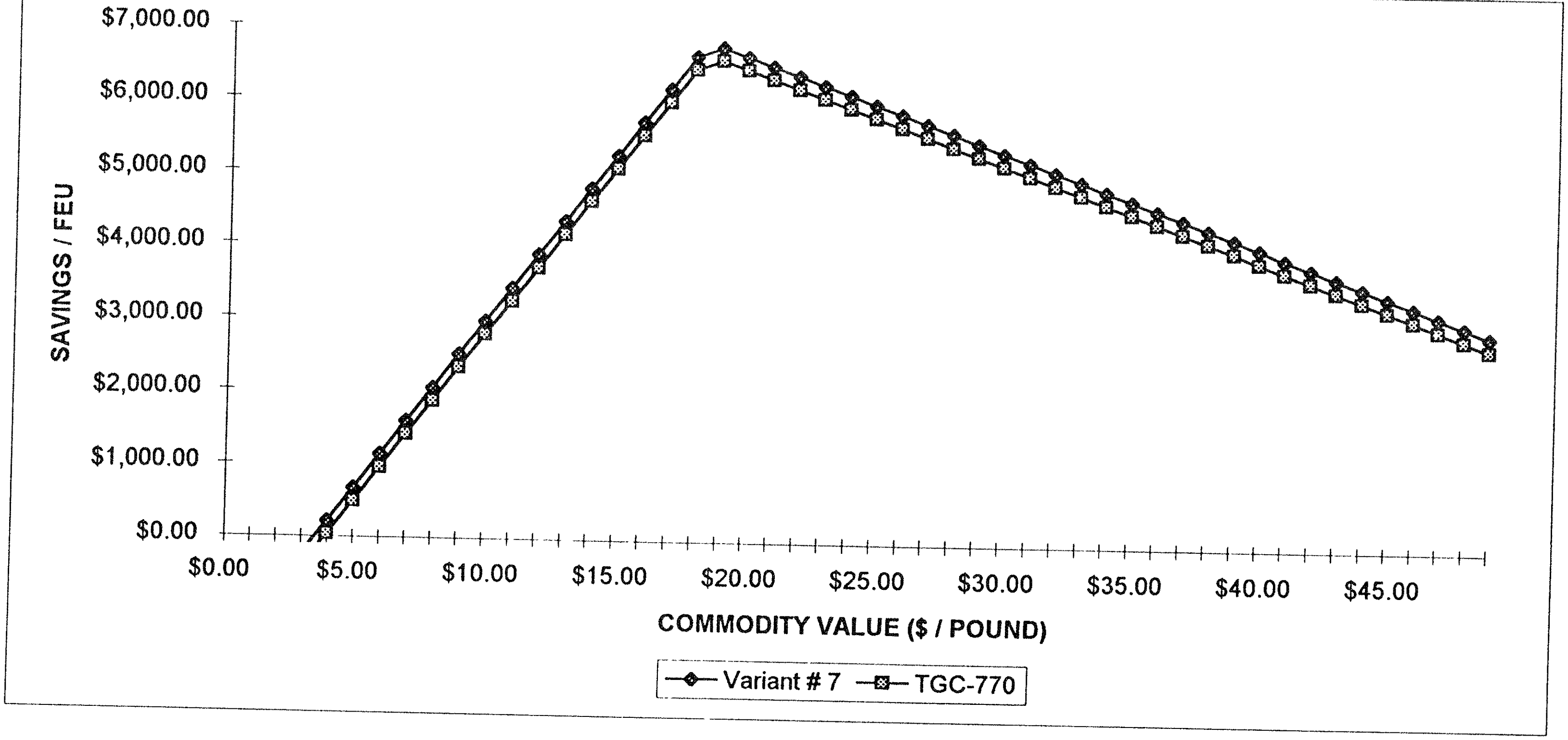

TOTAL LOGISTICS COST MODEL: SENSITIVITY ANALYSIS
VERY LOW CARRYING COST

FEUs Shipped (Actual)	365
Density (lb. / Cu.Ft.)	10.7
Value Density ($ / lb.)	$1 - $50
Cubic Value ($ / Cu.Ft.)	$11 - $533
Tons per FEU	12.5
Lbs. per FEU	27,558
Value per FEU	$27,558 +
Annual Carrying Charge	15.0%
Demand Period	365
Shelf Life (Days)	365
Salvage Value	100%
Decay Parameter	3.0
Std. Devs. for Safety Stock	3.00
Warehouse Cost ($ / lb. / year)	$0.00
Storability (FEU load Factor)	85%

Standard Ocean	Freight Rate / FEU	$1,800
	Transit Time (days)	21.0
	Std. Dev. of Transit Time	3.15
	Service Freq.	52
	Avg. Shipment Size	7.0
Standard Air Freight	Freight Rate / FEU	$12,600
	Transit Time (days)	3.0
	Std. Dev. of Transit Time	0.50
	Service Freq.	365
	Avg. Shipment Size	1.0
FastShip	Freight Rate / FEU	$1,800
	Transit Time (days)	7.0
	Std. Dev. of Transit Time	0.17
	Service Freq.	156
	Avg. Shipment Size	2.3

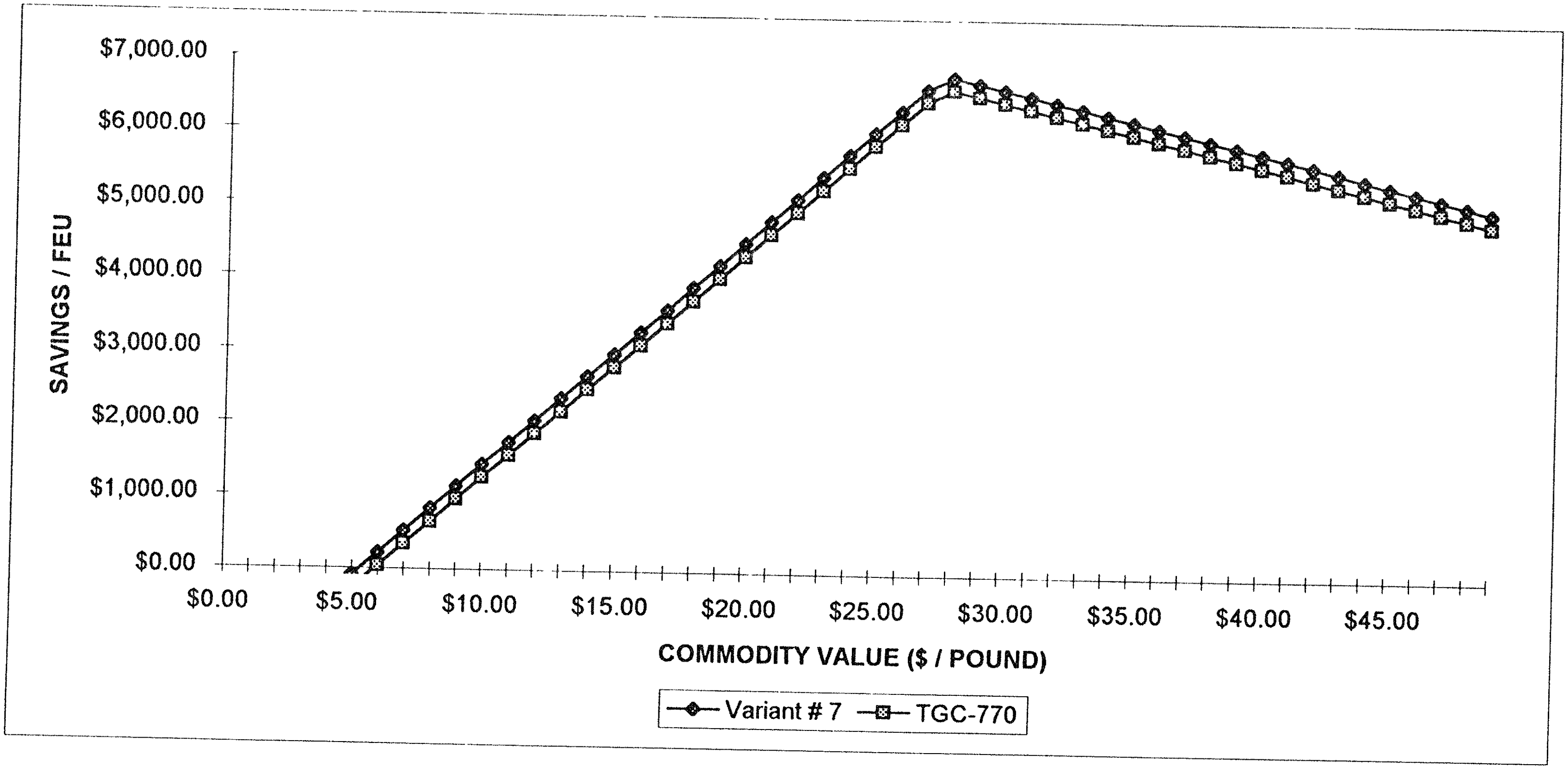

TOTAL LOGISTICS COST MODEL: SENSITIVITY ANALYSIS
LOW CARRYING COST

FEUs Shipped (Actual)	365
Density (lb. / Cu.Ft.)	10.7
Value Density ($ / lb.)	$1 - $50
Cubic Value ($ / Cu.Ft.)	$11 - $533
Tons per FEU	12.5
Lbs. per FEU	27,558
Value per FEU	$27,558 +
Annual Carrying Charge	20.0%
Demand Period	365
Shelf Life (Days)	365
Salvage Value	100%
Decay Parameter	3.0
Std. Devs. for Safety Stock	3.00
Warehouse Cost ($ / lb. / year)	$0.00
Storability (FEU load Factor)	85%

Standard Ocean	Freight Rate / FEU	$1,800
	Transit Time (days)	21.0
	Std. Dev. of Transit Time	3.15
	Service Freq.	52
	Avg. Shipment Size	7.0
Standard Air Freight	Freight Rate / FEU	$12,600
	Transit Time (days)	3.0
	Std. Dev. of Transit Time	0.50
	Service Freq.	365
	Avg. Shipment Size	1.0
FastShip	Freight Rate / FEU	$1,800
	Transit Time (days)	7.0
	Std. Dev. of Transit Time	0.17
	Service Freq.	156
	Avg. Shipment Size	2.3

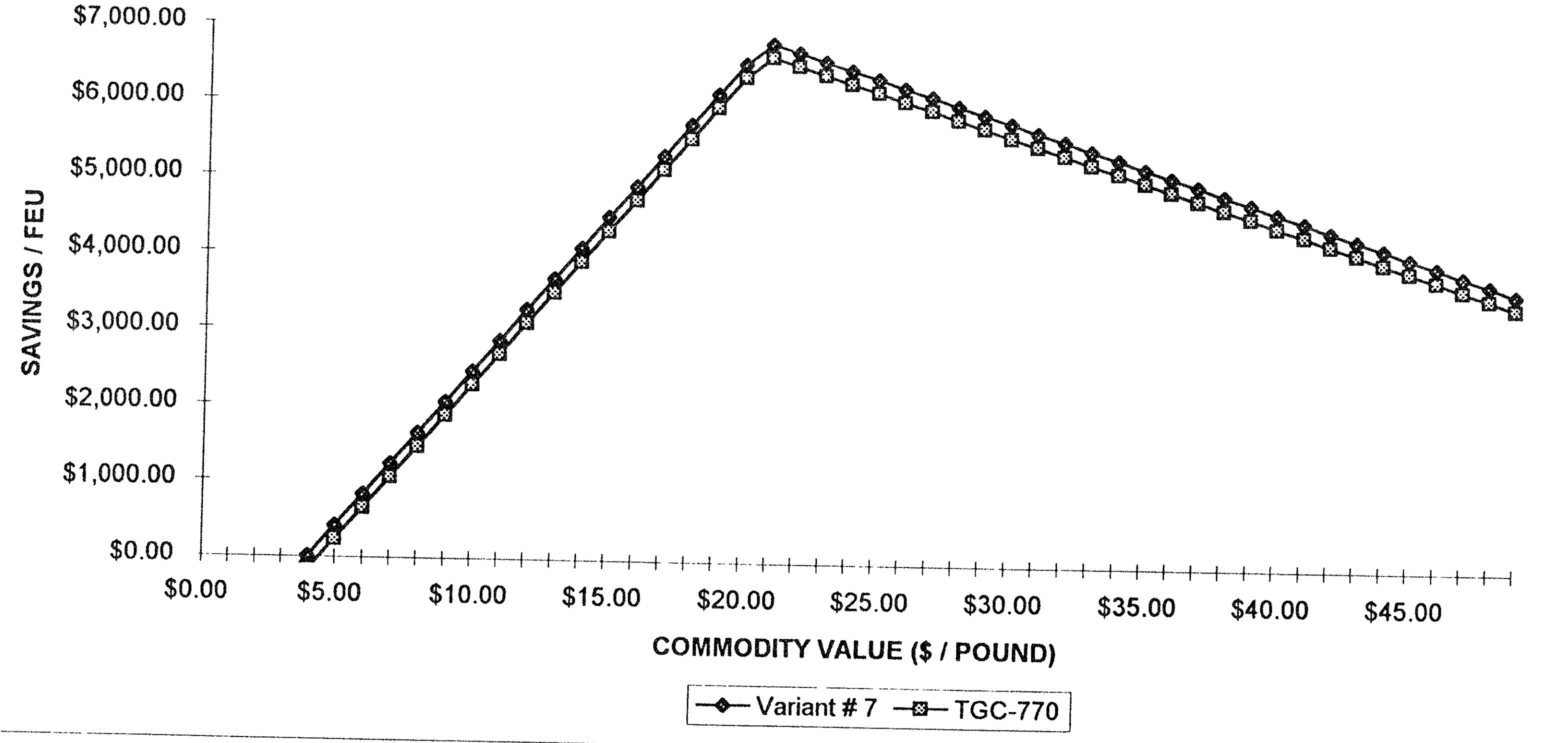

TOTAL LOGISTICS COST MODEL: SENSITIVITY ANALYSIS
HIGH CARRYING COST

FEUs Shipped (Actual)	365
Density (lb. / Cu.Ft.)	10.7
Value Density ($ / lb.)	$1 - $50
Cubic Value ($ / Cu.Ft.)	$11 - $533
Tons per FEU	12.5
Lbs. per FEU	27,558
Value per FEU	$27,558 +
Annual Carrying Charge	25.0%
Demand Period	365
Shelf Life (Days)	365
Salvage Value	100%
Decay Parameter	3.0
Std. Devs. for Safety Stock	3.00
Warehouse Cost ($ / lb. / year)	$0.00
Storability (FEU load Factor)	85%

Standard Ocean	Freight Rate / FEU	$1,800
	Transit Time (days)	21.0
	Std. Dev. of Transit Time	3.15
	Service Freq.	52
	Avg. Shipment Size	7.0
Standard Air Freight	Freight Rate / FEU	$12,600
	Transit Time (days)	3.0
	Std. Dev. of Transit Time	0.50
	Service Freq.	365
	Avg. Shipment Size	1.0
FastShip	Freight Rate / FEU	$1,800
	Transit Time (days)	7.0
	Std. Dev. of Transit Time	0.17
	Service Freq.	156
	Avg. Shipment Size	2.3

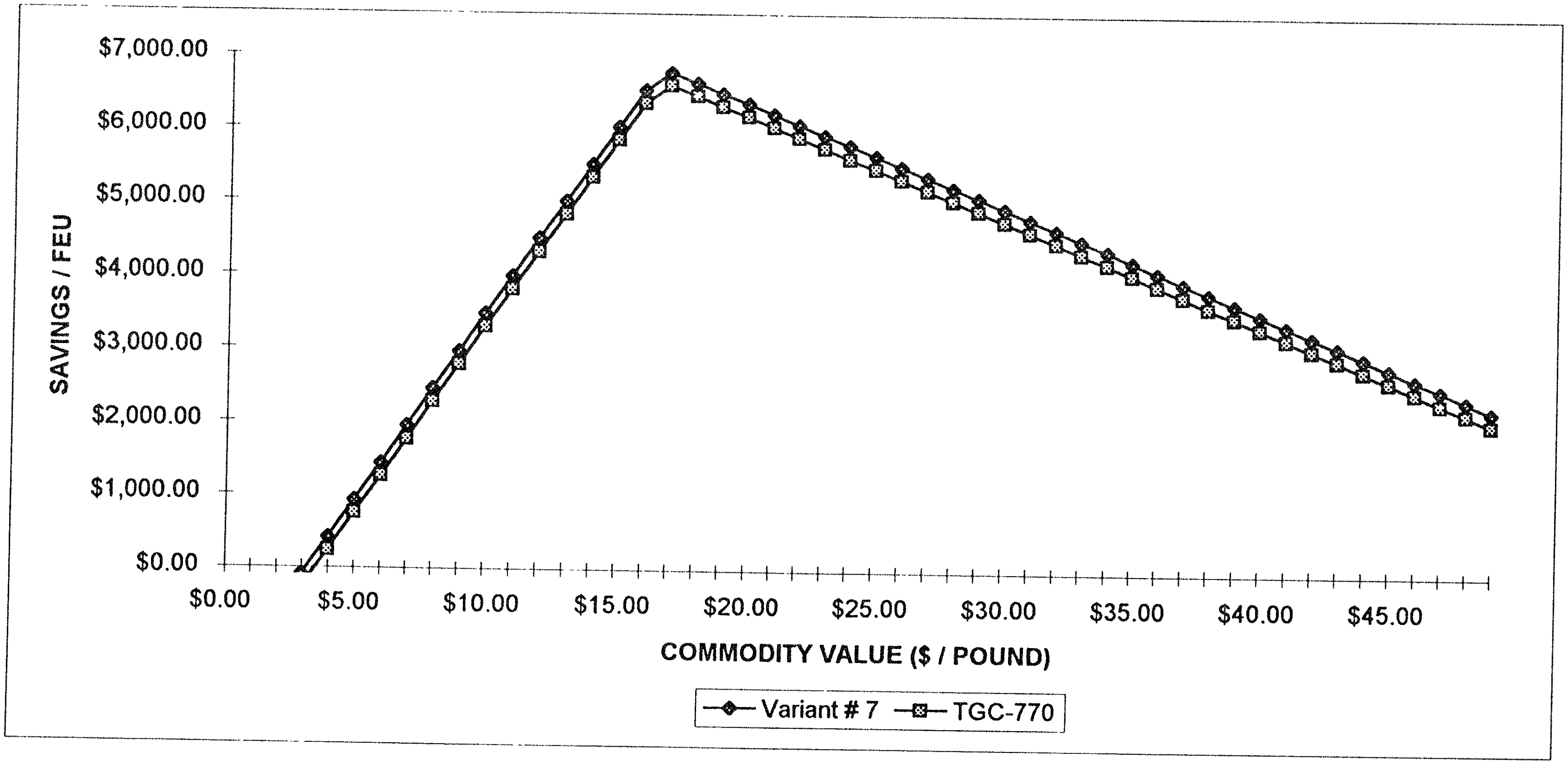

TOTAL LOGISTICS COST MODEL: SENSITIVITY ANALYSIS
HIGH CARRYING COST B

FEUs Shipped (Actual)	365
Density (lb. / Cu.Ft.)	10.7
Value Density ($ / lb.)	$1 - $50
Cubic Value ($ / Cu.Ft.)	$11 - $533
Tons per FEU	12.5
Lbs. per FEU	27,558
Value per FEU	$27,558 +
Annual Carrying Charge	30.0%
Demand Period	365
Shelf Life (Days)	365
Salvage Value	100%
Decay Parameter	3.0
Std. Devs. for Safety Stock	3.00
Warehouse Cost ($ / lb. / year)	$0.00
Storability (FEU load Factor)	85%

Standard Ocean	Freight Rate / FEU	$1,800
	Transit Time (days)	21.0
	Std. Dev. of Transit Time	3.15
	Service Freq.	52
	Avg. Shipment Size	7.0
Standard Air Freight	Freight Rate / FEU	$12,600
	Transit Time (days)	3.0
	Std. Dev. of Transit Time	0.50
	Service Freq.	365
	Avg. Shipment Size	1.0
FastShip	Freight Rate / FEU	$1,800
	Transit Time (days)	7.0
	Std. Dev. of Transit Time	0.17
	Service Freq.	156
	Avg. Shipment Size	2.3

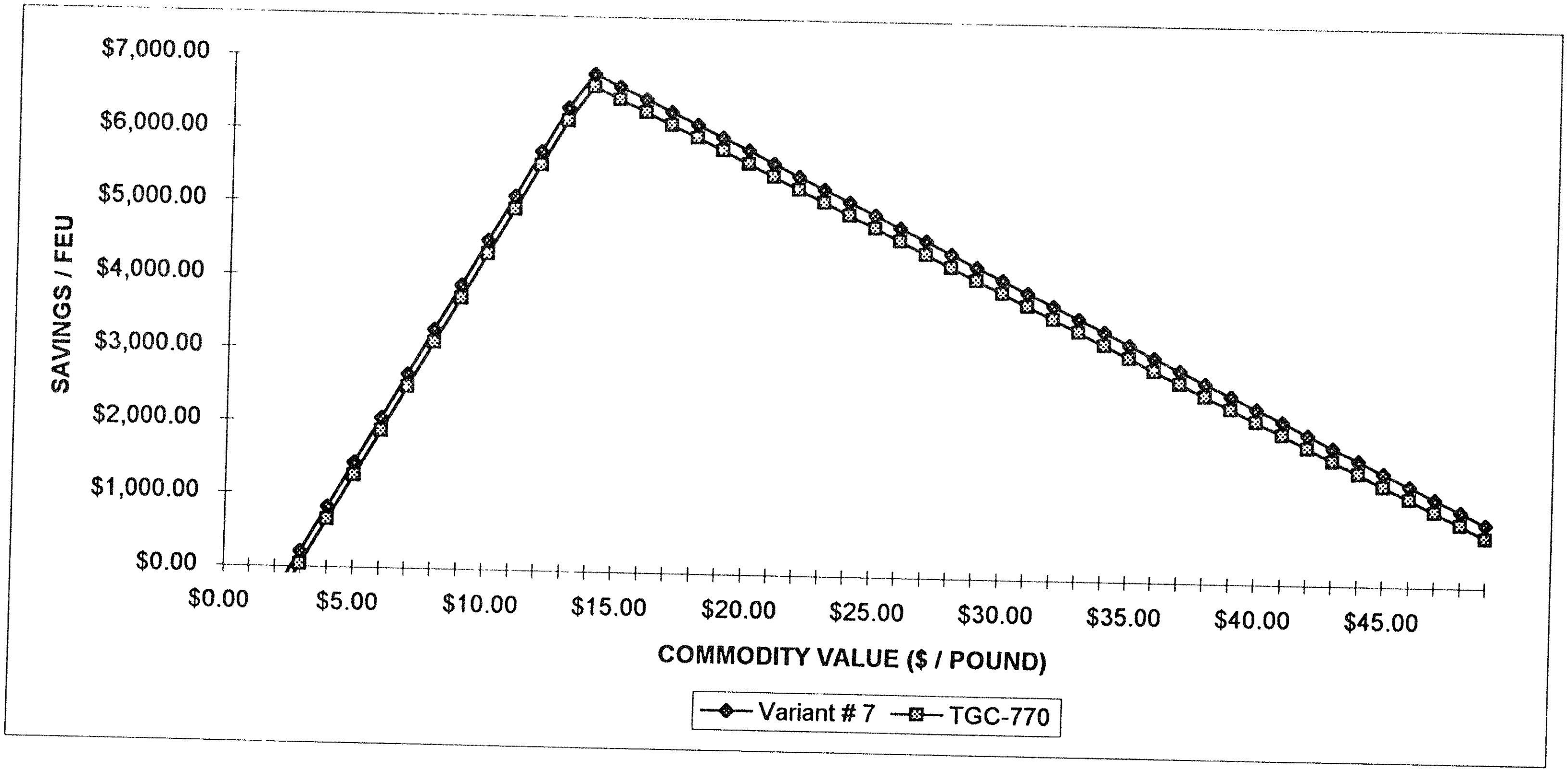

TOTAL LOGISTICS COST MODEL: SENSITIVITY ANALYSIS
VERY HIGH CARRYING COST

FEUs Shipped (Actual)	365
Density (lb. / Cu.Ft.)	10.7
Value Density ($ / lb.)	$1 - $50
Cubic Value ($ / Cu.Ft.)	$11 - $533
Tons per FEU	12.5
Lbs. per FEU	27,558
Value per FEU	$27,558 +
Annual Carrying Charge	40.0%
Demand Period	365
Shelf Life (Days)	365
Salvage Value	100%
Decay Parameter	3.0
Std. Devs. for Safety Stock	3.00
Warehouse Cost ($ / lb. / year)	$0.00
Storability (FEU load Factor)	85%

Standard Ocean	Freight Rate / FEU	$1,800
	Transit Time (days)	21.0
	Std. Dev. of Transit Time	3.15
	Service Freq.	52
	Avg. Shipment Size	7.0
Standard Air Freight	Freight Rate / FEU	$12,600
	Transit Time (days)	3.0
	Std. Dev. of Transit Time	0.50
	Service Freq.	365
	Avg. Shipment Size	1.0
FastShip	Freight Rate / FEU	$1,800
	Transit Time (days)	7.0
	Std. Dev. of Transit Time	0.17
	Service Freq.	156
	Avg. Shipment Size	2.3

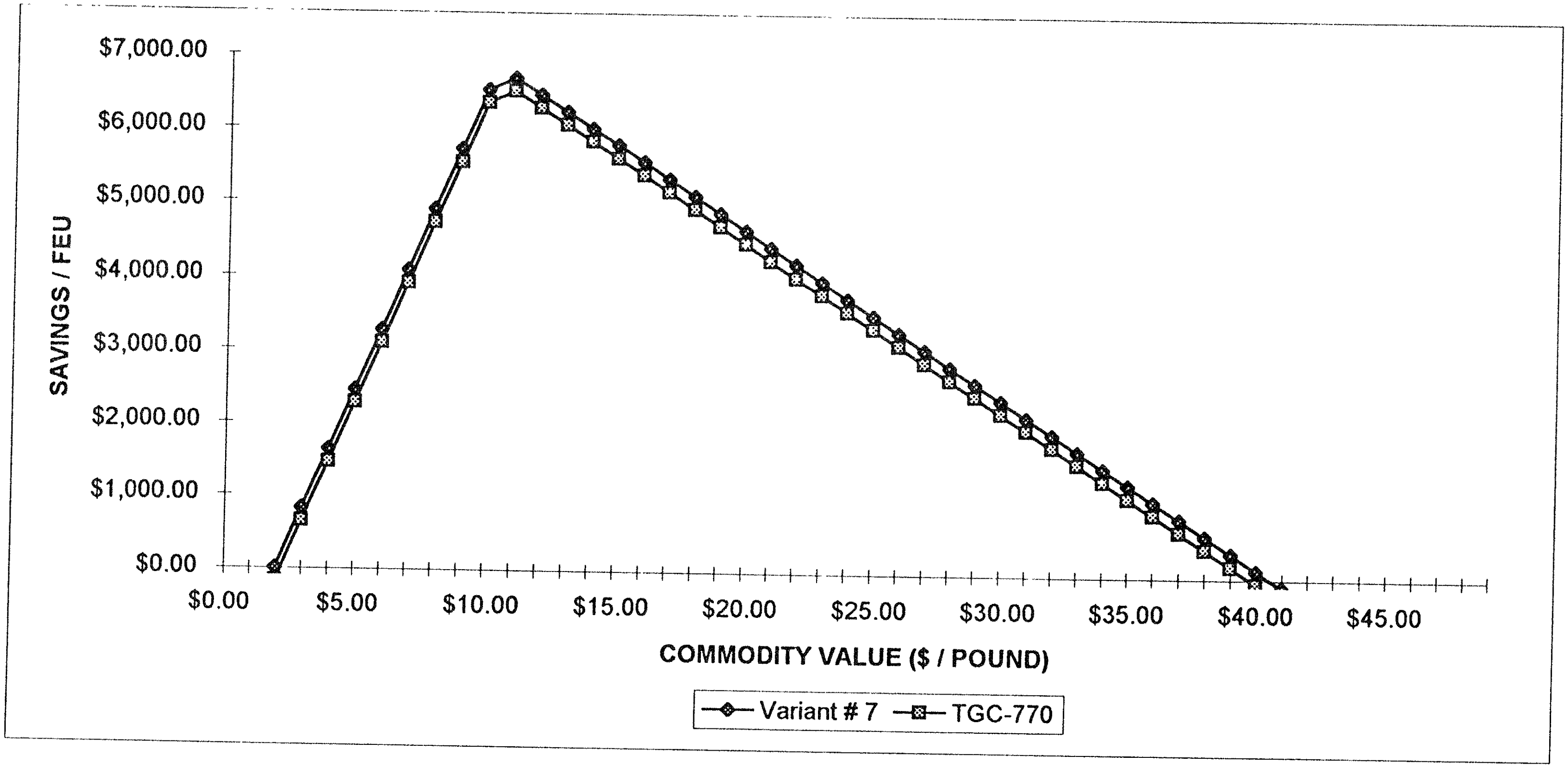

TOTAL LOGISTICS COST MODEL: SENSITIVITY ANALYSIS
LOW DENSITY

FEUs Shipped (Actual)	365
Density (lb. / Cu.Ft.)	8.0
Value Density ($ / lb.)	$1 - $50
Cubic Value ($ / Cu.Ft.)	$11 - $533
Tons per FEU	9.4
Lbs. per FEU	20,672
Value per FEU	$27,558 +
Annual Carrying Charge	22.5%
Demand Period	365
Shelf Life (Days)	365
Salvage Value	100%
Decay Parameter	3.0
Std. Devs. for Safety Stock	3.00
Warehouse Cost ($ / lb. / year)	$0.00
Storability (FEU load Factor)	85%

Standard Ocean	Freight Rate / FEU	$1,800
	Transit Time (days)	21.0
	Std. Dev. of Transit Time	3.15
	Service Freq.	52
	Avg. Shipment Size	7.0
Standard Air Freight	Freight Rate / FEU	$12,600
	Transit Time (days)	3.0
	Std. Dev. of Transit Time	0.50
	Service Freq.	365
	Avg. Shipment Size	1.0
FastShip	Freight Rate / FEU	$1,800
	Transit Time (days)	7.0
	Std. Dev. of Transit Time	0.17
	Service Freq.	156
	Avg. Shipment Size	2.3

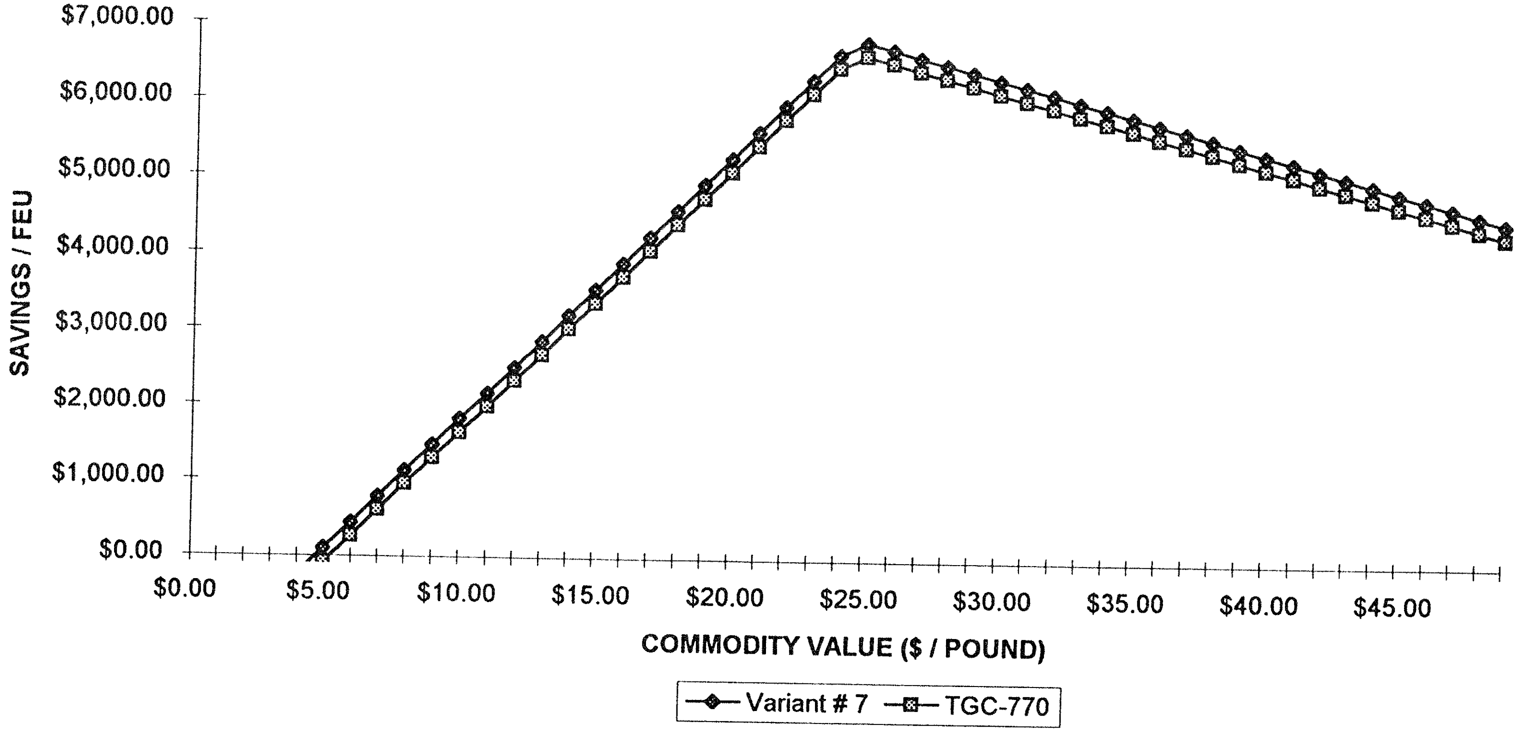

TOTAL LOGISTICS COST MODEL: SENSITIVITY ANALYSIS
HIGH DENSITY

FEUs Shipped (Actual)	365
Density (lb. / Cu.Ft.)	16.0
Value Density ($ / lb.)	$1 - $50
Cubic Value ($ / Cu.Ft.)	$11 - $533
Tons per FEU	18.8
Lbs. per FEU	41,344
Value per FEU	$27,558 +
Annual Carrying Charge	22.5%
Demand Period	365
Shelf Life (Days)	365
Salvage Value	100%
Decay Parameter	3.0
Std. Devs. for Safety Stock	3.00
Warehouse Cost ($ / lb. / year)	$0.00
Storability (FEU load Factor)	85%

Standard Ocean	Freight Rate / FEU	$1,800
	Transit Time (days)	21.0
	Std. Dev. of Transit Time	3.15
	Service Freq.	52
	Avg. Shipment Size	7.0
Standard Air Freight	Freight Rate / FEU	$12,600
	Transit Time (days)	3.0
	Std. Dev. of Transit Time	0.50
	Service Freq.	365
	Avg. Shipment Size	1.0
FastShip	Freight Rate / FEU	$1,800
	Transit Time (days)	7.0
	Std. Dev. of Transit Time	0.17
	Service Freq.	156
	Avg. Shipment Size	2.3

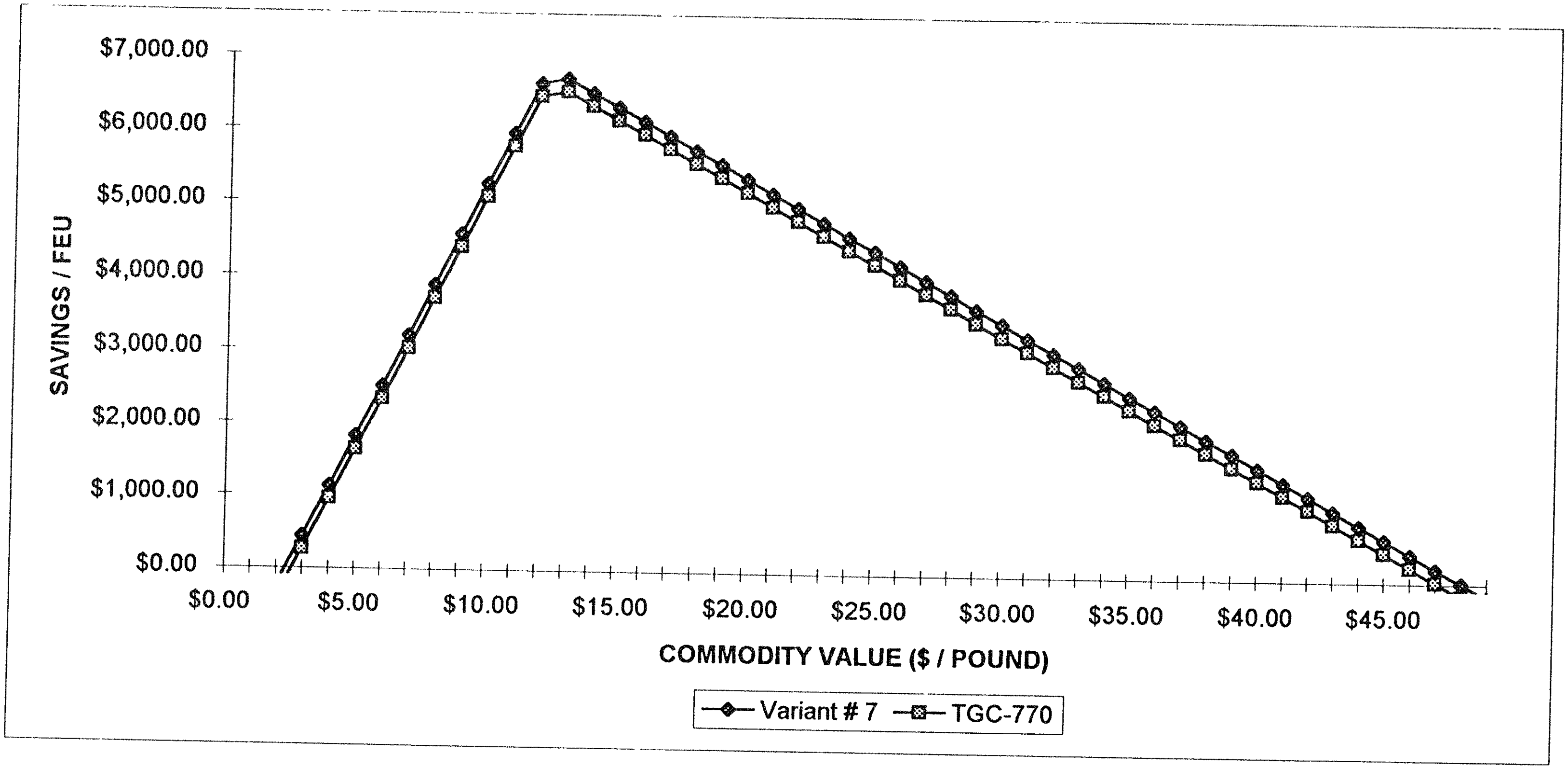

TOTAL LOGISTICS COST MODEL: SENSITIVITY ANALYSIS
LOW STORABILITY

FEUs Shipped (Actual)	365
Density (lb. / Cu.Ft.)	10.7
Value Density ($ / lb.)	$1 - $50
Cubic Value ($ / Cu.Ft.)	$11 - $533
Tons per FEU	11.1
Lbs. per FEU	24,396
Value per FEU	$27,558 +
Annual Carrying Charge	22.5%
Demand Period	365
Shelf Life (Days)	365
Salvage Value	100%
Decay Parameter	3.0
Std. Devs. for Safety Stock	3.00
Warehouse Cost ($ / lb. / year)	$0.00
Storability (FEU load Factor)	75%

Standard Ocean	Freight Rate / FEU	$1,800
	Transit Time (days)	21.0
	Std. Dev. of Transit Time	3.15
	Service Freq.	52
	Avg. Shipment Size	7.0
Standard Air Freight	Freight Rate / FEU	$12,600
	Transit Time (days)	3.0
	Std. Dev. of Transit Time	0.50
	Service Freq.	365
	Avg. Shipment Size	1.0
FastShip	Freight Rate / FEU	$1,800
	Transit Time (days)	7.0
	Std. Dev. of Transit Time	0.17
	Service Freq.	156
	Avg. Shipment Size	2.3

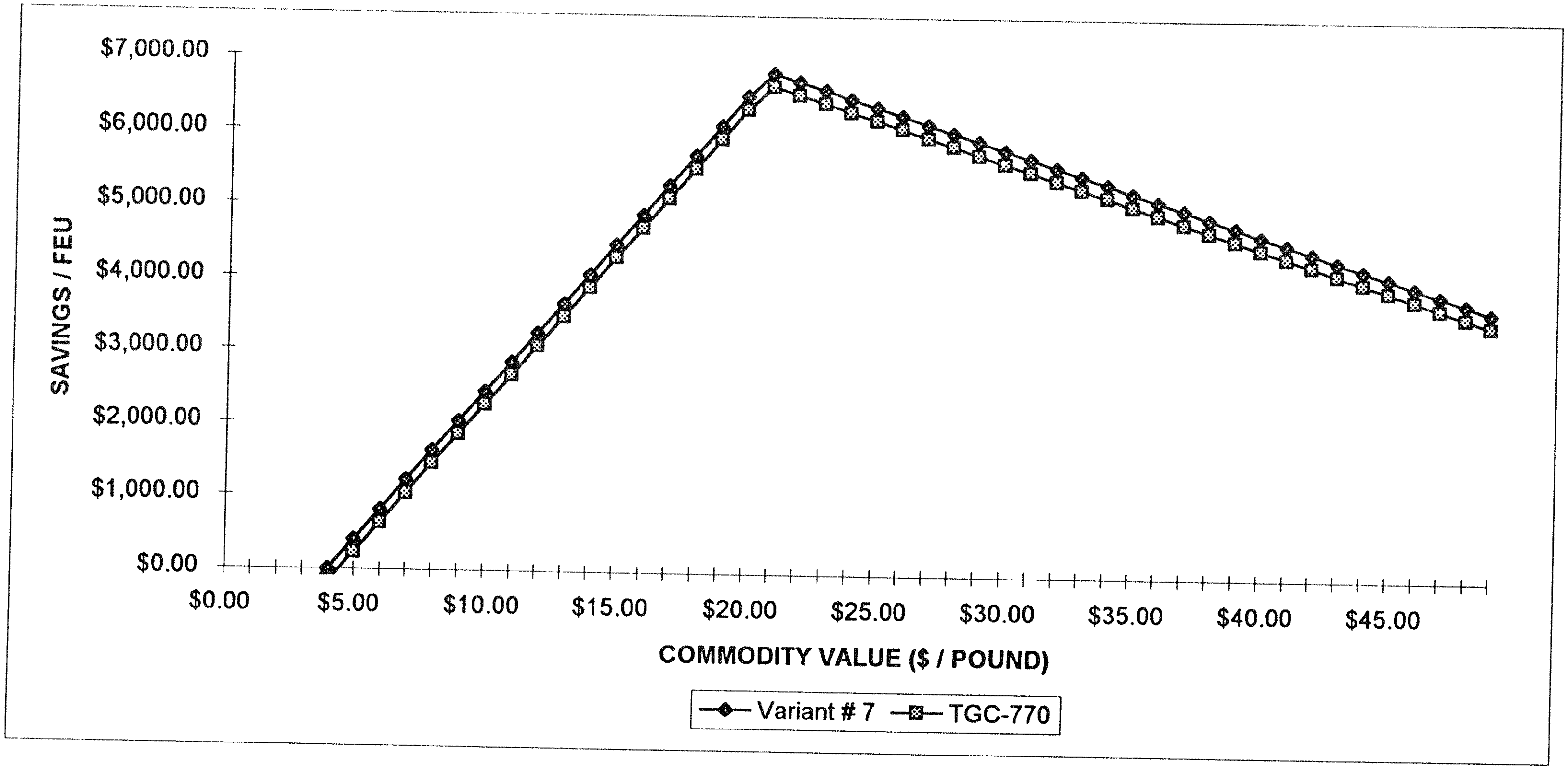

TOTAL LOGISTICS COST MODEL: SENSITIVITY ANALYSIS
HIGH STORABILITY

FEUs Shipped (Actual)	365
Density (lb. / Cu.Ft.)	10.7
Value Density ($ / lb.)	$1 - $50
Cubic Value ($ / Cu.Ft.)	$11 - $533
Tons per FEU	14.0
Lbs. per FEU	30,902
Value per FEU	$27,558 +
Annual Carrying Charge	22.5%
Demand Period	365
Shelf Life (Days)	365
Salvage Value	100%
Decay Parameter	3.0
Std. Devs. for Safety Stock	3.00
Warehouse Cost ($ / lb. / year)	$0.00
Storability (FEU load Factor)	95%

Standard Ocean	Freight Rate / FEU	$1,800
	Transit Time (days)	21.0
	Std. Dev. of Transit Time	3.15
	Service Freq.	52
	Avg. Shipment Size	7.0
Standard Air Freight	Freight Rate / FEU	$12,600
	Transit Time (days)	3.0
	Std. Dev. of Transit Time	0.50
	Service Freq.	365
	Avg. Shipment Size	1.0
FastShip	Freight Rate / FEU	$1,800
	Transit Time (days)	7.0
	Std. Dev. of Transit Time	0.17
	Service Freq.	156
	Avg. Shipment Size	2.3

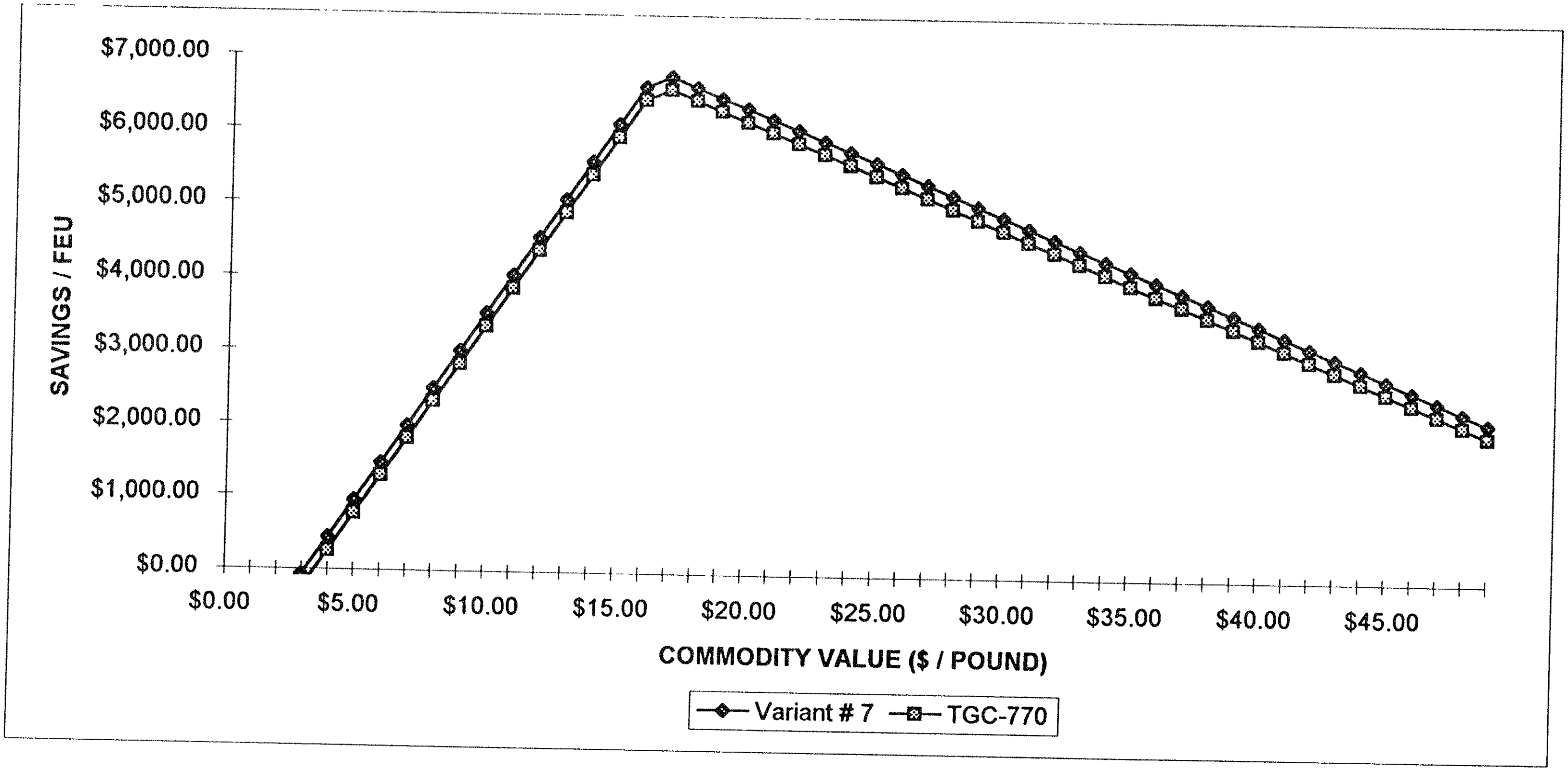

TOTAL LOGISTICS COST MODEL: SENSITIVITY ANALYSIS
SEASONAL COMMODITY A

FEUs Shipped (Actual)	365
Density (lb. / Cu.Ft.)	10.7
Value Density ($ / lb.)	$1 - $50
Cubic Value ($ / Cu.Ft.)	$11 - $533
Tons per FEU	12.5
Lbs. per FEU	27,649
Value per FEU	$27,558 +
Annual Carrying Charge	22.5%
Demand Period	365
Shelf Life (Days)	90
Salvage Value	50%
Decay Parameter	3.0
Std. Devs. for Safety Stock	3.00
Warehouse Cost ($ / lb. / year)	$0.00
Storability (FEU load Factor)	85%

Standard Ocean	Freight Rate / FEU	$1,800
	Transit Time (days)	21.0
	Std. Dev. of Transit Time	3.15
	Service Freq.	52
	Avg. Shipment Size	7.0
Standard Air Freight	Freight Rate / FEU	$12,600
	Transit Time (days)	3.0
	Std. Dev. of Transit Time	0.50
	Service Freq.	365
	Avg. Shipment Size	1.0
FastShip	Freight Rate / FEU	$1,800
	Transit Time (days)	7.0
	Std. Dev. of Transit Time	0.17
	Service Freq.	156
	Avg. Shipment Size	2.3

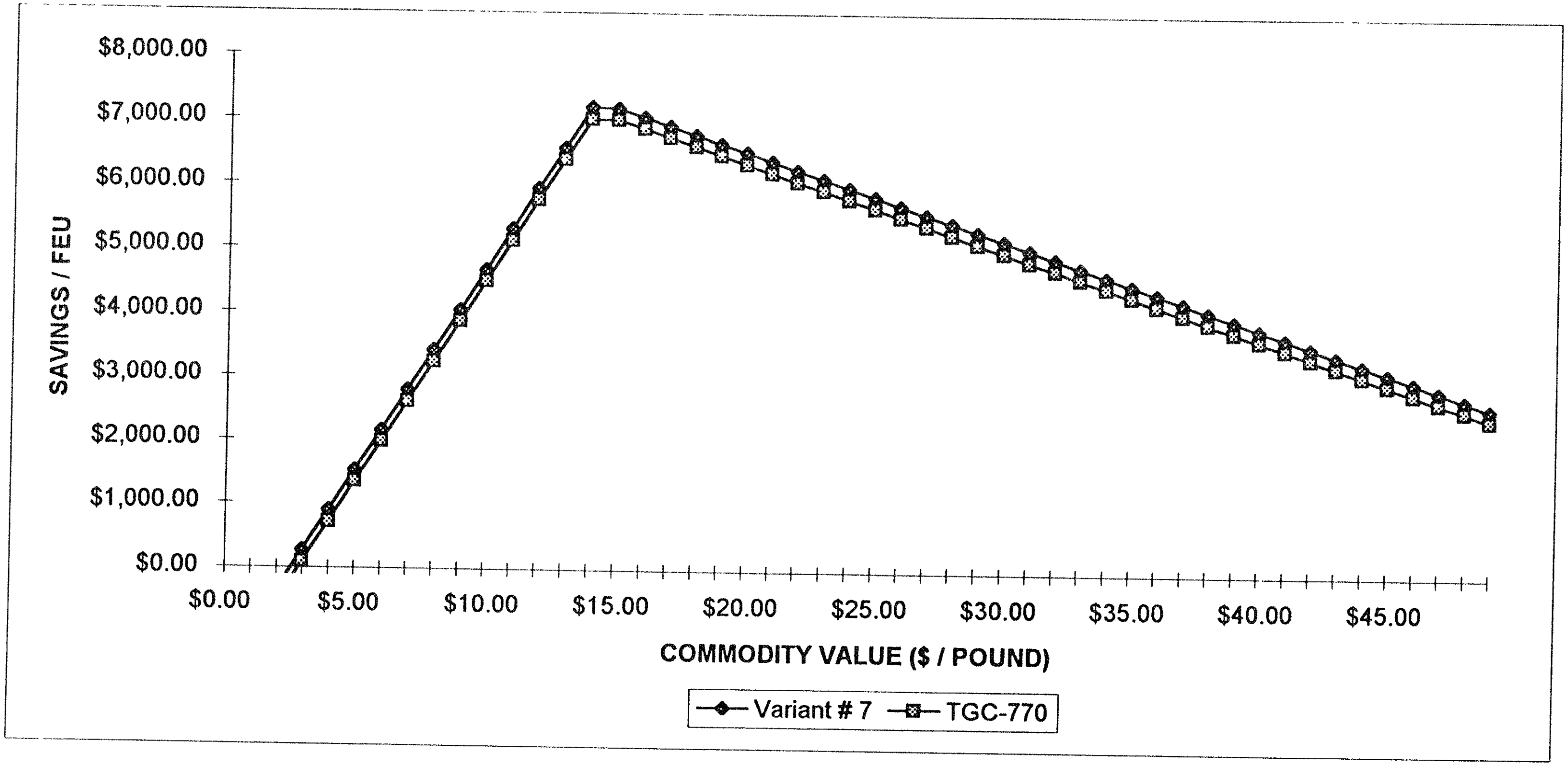

TOTAL LOGISTICS COST MODEL: SENSITIVITY ANALYSIS
SEASONAL COMMODITY B

FEUs Shipped (Actual)	365
Density (lb. / Cu.Ft.)	10.7
Value Density ($ / lb.)	$1 - $50
Cubic Value ($ / Cu.Ft.)	$11 - $533
Tons per FEU	12.5
Lbs. per FEU	27,649
Value per FEU	$27,558 +
Annual Carrying Charge	22.5%
Demand Period	365
Shelf Life (Days)	90
Salvage Value	25%
Decay Parameter	2.0
Std. Devs. for Safety Stock	3.00
Warehouse Cost ($ / lb. / year)	$0.00
Storability (FEU load Factor)	85%

Standard Ocean	Freight Rate / FEU	$1,800
	Transit Time (days)	21.0
	Std. Dev. of Transit Time	3.15
	Service Freq.	52
	Avg. Shipment Size	7.0
Standard Air Freight	Freight Rate / FEU	$12,600
	Transit Time (days)	3.0
	Std. Dev. of Transit Time	0.50
	Service Freq.	365
	Avg. Shipment Size	1.0
FastShip	Freight Rate / FEU	$1,800
	Transit Time (days)	7.0
	Std. Dev. of Transit Time	0.17
	Service Freq.	156
	Avg. Shipment Size	2.3

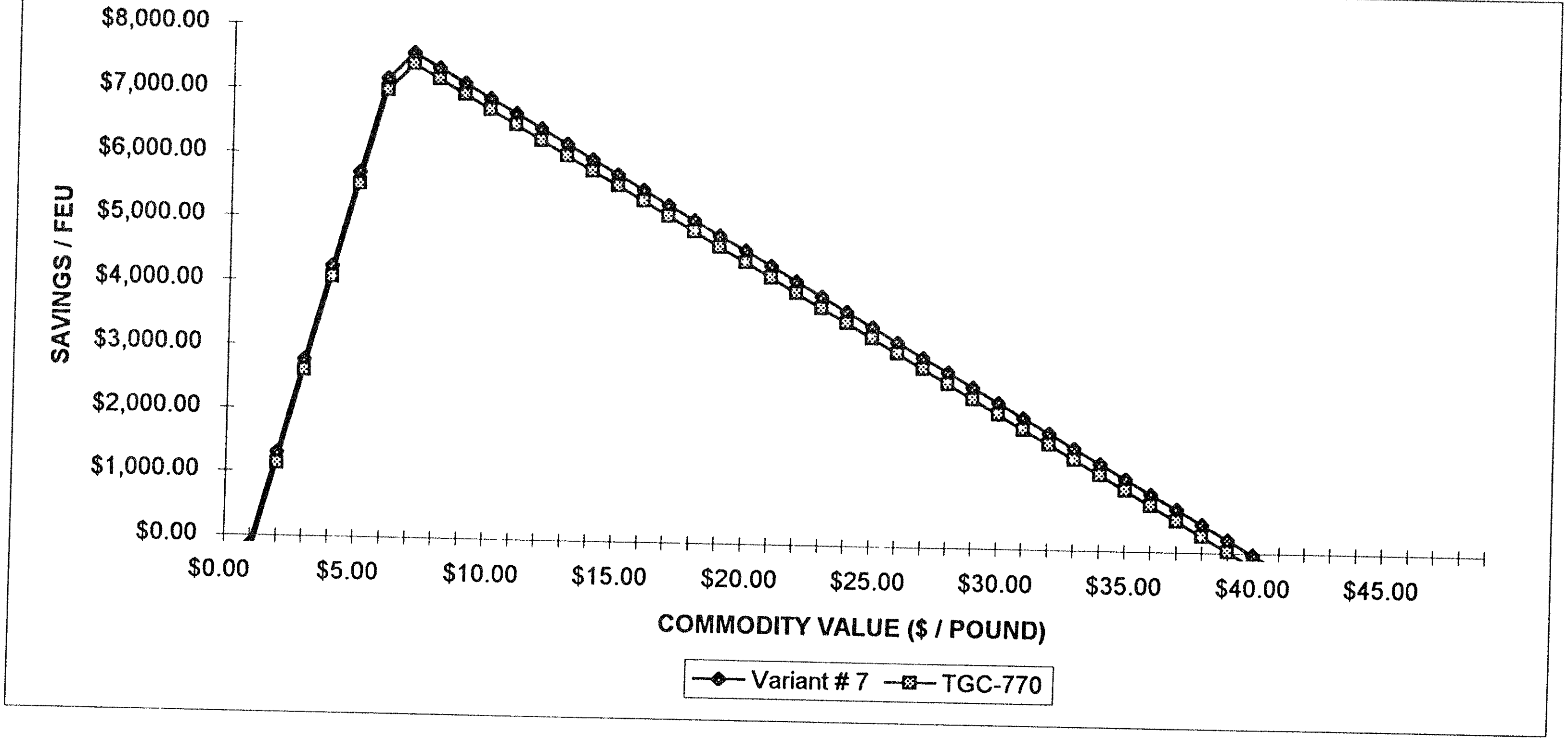

TOTAL LOGISTICS COST MODEL: SENSITIVITY ANALYSIS
PERISHABLE COMMODITY A

FEUs Shipped (Actual)	365
Density (lb. / Cu.Ft.)	10.7
Value Density ($ / lb.)	$1 - $50
Cubic Value ($ / Cu.Ft.)	$11 - $533
Tons per FEU	12.5
Lbs. per FEU	27,649
Value per FEU	$27,558 +
Annual Carrying Charge	22.5%
Demand Period	365
Shelf Life (Days)	30
Salvage Value	25%
Decay Parameter	4.0
Std. Devs. for Safety Stock	3.00
Warehouse Cost ($ / lb. / year)	$0.00
Storability (FEU load Factor)	85%

Standard Ocean	Freight Rate / FEU	$1,800
	Transit Time (days)	21.0
	Std. Dev. of Transit Time	3.15
	Service Freq.	52
	Avg. Shipment Size	7.0
Standard Air Freight	Freight Rate / FEU	$12,600
	Transit Time (days)	3.0
	Std. Dev. of Transit Time	0.50
	Service Freq.	365
	Avg. Shipment Size	1.0
FastShip	Freight Rate / FEU	$1,800
	Transit Time (days)	7.0
	Std. Dev. of Transit Time	0.17
	Service Freq.	156
	Avg. Shipment Size	2.3

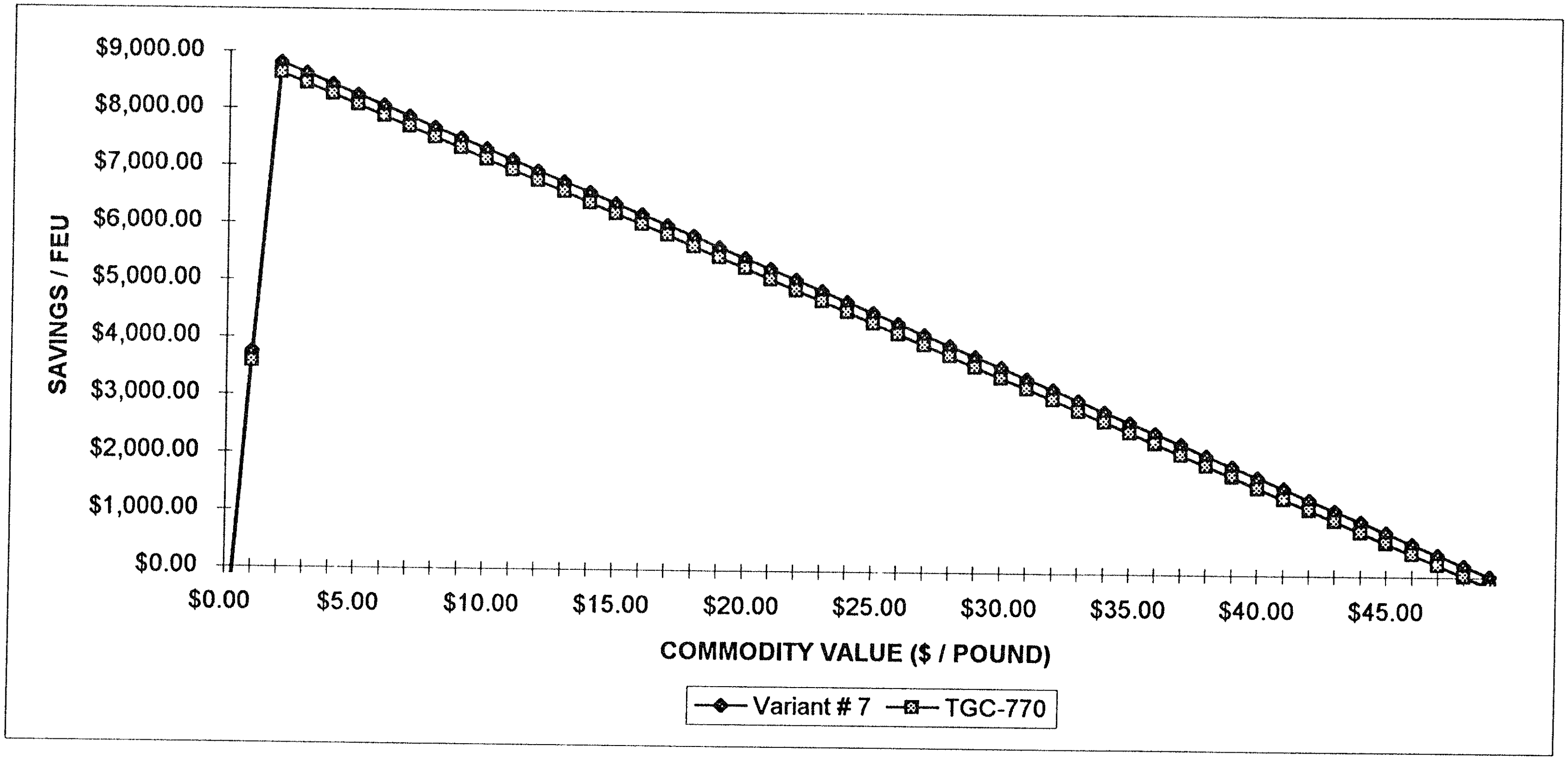

TOTAL LOGISTICS COST MODEL: SENSITIVITY ANALYSIS
PERISHABLE COMMODITY B

FEUs Shipped (Actual)	365
Density (lb. / Cu.Ft.)	10.7
Value Density ($ / lb.)	$1 - $50
Cubic Value ($ / Cu.Ft.)	$11 - $533
Tons per FEU	12.5
Lbs. per FEU	27,649
Value per FEU	$27,558 +
Annual Carrying Charge	22.5%
Demand Period	365
Shelf Life (Days)	20
Salvage Value	25%
Decay Parameter	4.0
Std. Devs. for Safety Stock	3.00
Warehouse Cost ($ / lb. / year)	$0.00
Storability (FEU load Factor)	85%

Standard Ocean	Freight Rate / FEU	$1,800
	Transit Time (days)	21.0
	Std. Dev. of Transit Time	3.15
	Service Freq.	52
	Avg. Shipment Size	7.0
Standard Air Freight	Freight Rate / FEU	$12,600
	Transit Time (days)	3.0
	Std. Dev. of Transit Time	0.50
	Service Freq.	365
	Avg. Shipment Size	1.0
FastShip	Freight Rate / FEU	$1,800
	Transit Time (days)	7.0
	Std. Dev. of Transit Time	0.17
	Service Freq.	156
	Avg. Shipment Size	2.3

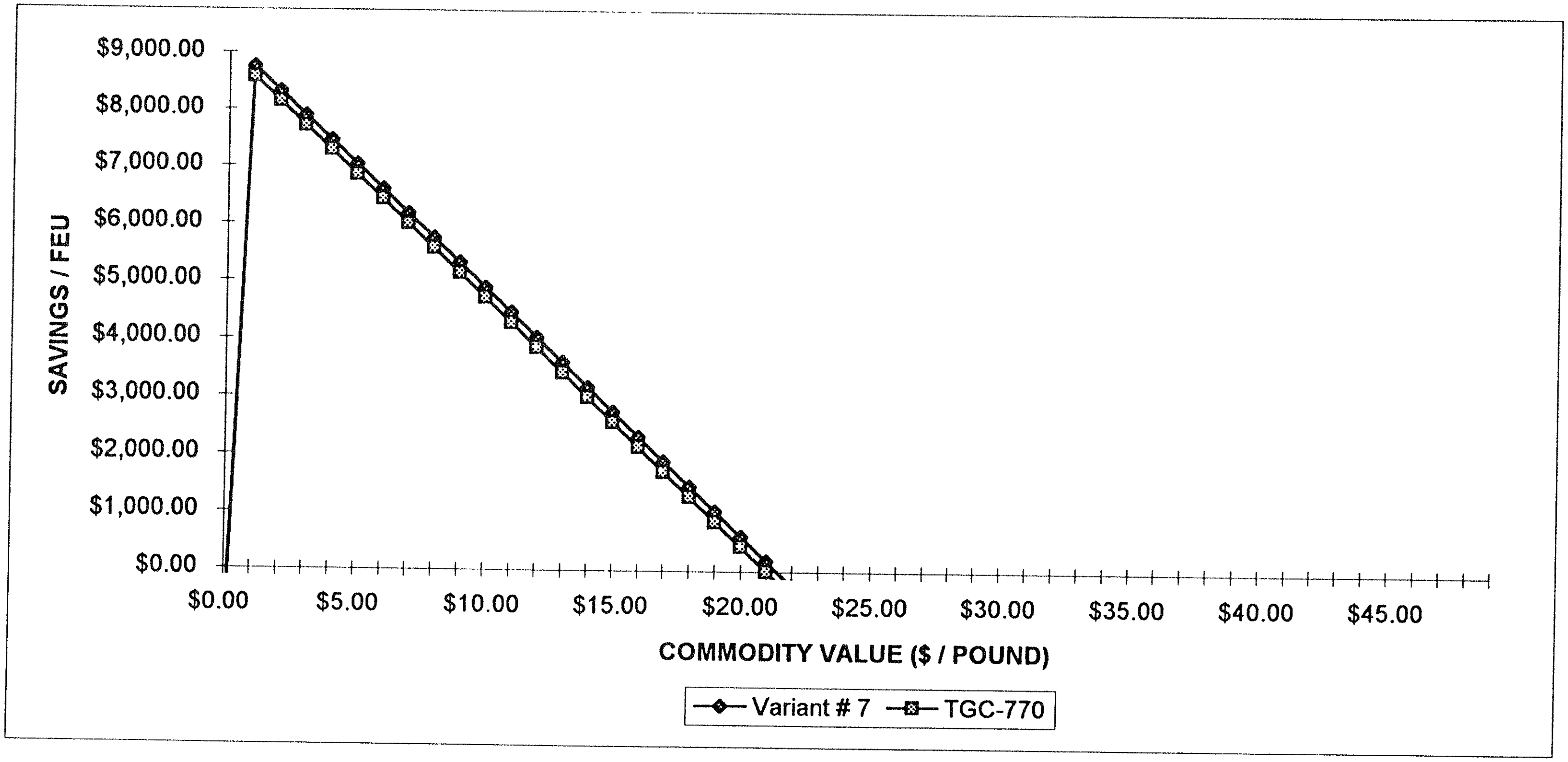

TOTAL LOGISTICS COST MODEL: SENSITIVITY ANALYSIS
PERISHABLE COMMODITY C

FEUs Shipped (Actual)	365
Density (lb. / Cu.Ft.)	10.7
Value Density ($ / lb.)	$1 - $50
Cubic Value ($ / Cu.Ft.)	$11 - $533
Tons per FEU	12.5
Lbs. per FEU	27,649
Value per FEU	$27,558 +
Annual Carrying Charge	22.5%
Demand Period	365
Shelf Life (Days)	15
Salvage Value	25%
Decay Parameter	4.0
Std. Devs. for Safety Stock	3.00
Warehouse Cost ($ / lb. / year)	$0.00
Storability (FEU load Factor)	85%

Standard Ocean	Freight Rate / FEU	$1,800
	Transit Time (days)	21.0
	Std. Dev. of Transit Time	3.15
	Service Freq.	52
	Avg. Shipment Size	7.0
Standard Air Freight	Freight Rate / FEU	$12,600
	Transit Time (days)	3.0
	Std. Dev. of Transit Time	0.50
	Service Freq.	365
	Avg. Shipment Size	1.0
FastShip	Freight Rate / FEU	$1,800
	Transit Time (days)	7.0
	Std. Dev. of Transit Time	0.17
	Service Freq.	156
	Avg. Shipment Size	2.3

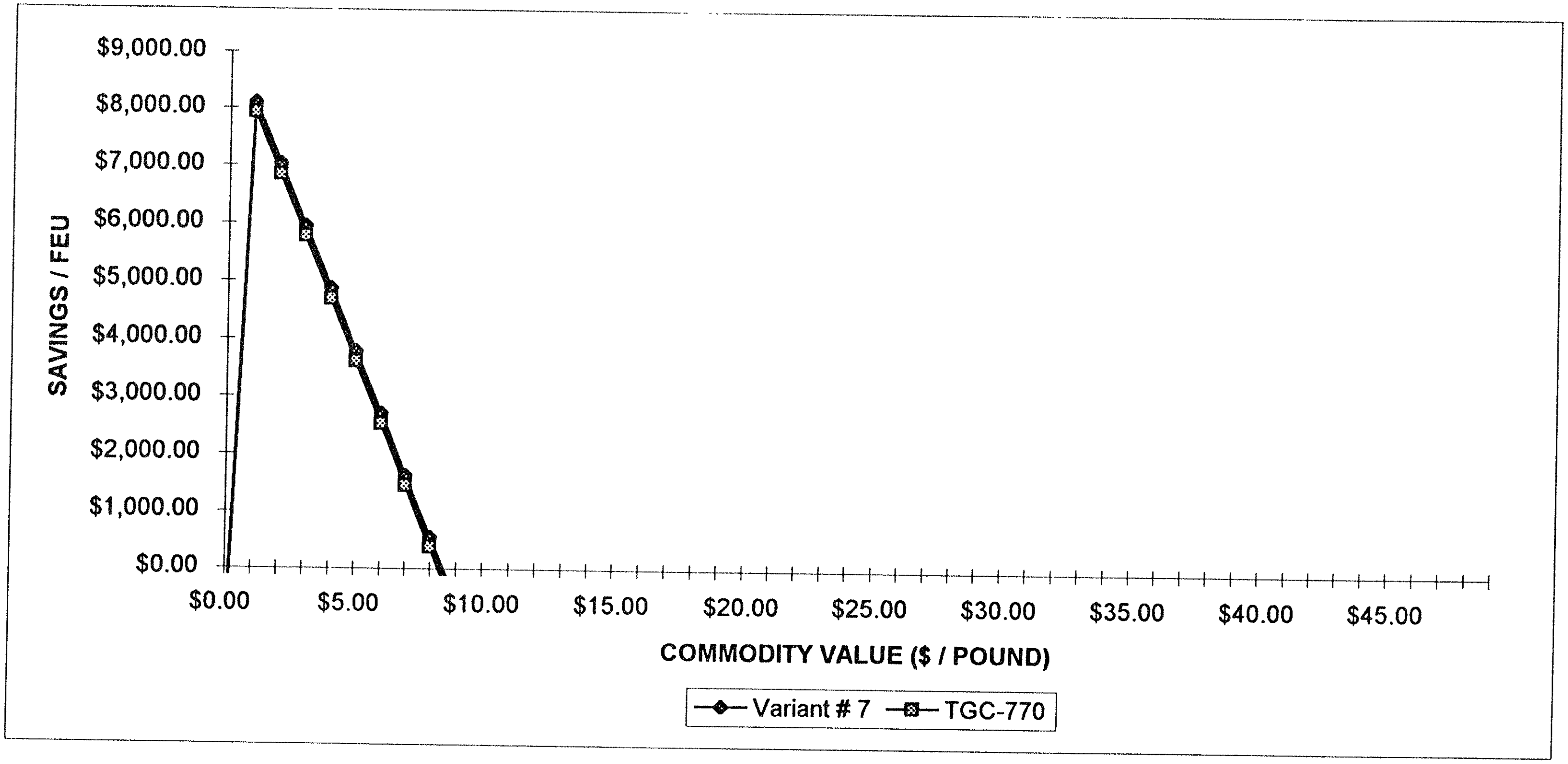

TOTAL LOGISTICS COST MODEL: SENSITIVITY ANALYSIS
PERISHABLE COMMODITY D

FEUs Shipped (Actual)	365
Density (lb. / Cu.Ft.)	10.7
Value Density ($ / lb.)	$1 - $50
Cubic Value ($ / Cu.Ft.)	$11 - $533
Tons per FEU	12.5
Lbs. per FEU	27,649
Value per FEU	$27,558 +
Annual Carrying Charge	22.5%
Demand Period	365
Shelf Life (Days)	15
Salvage Value	25%
Decay Parameter	2.0
Std. Devs. for Safety Stock	3.00
Warehouse Cost ($ / lb. / year)	$0.00
Storability (FEU load Factor)	85%

Standard Ocean	Freight Rate / FEU	$1,800
	Transit Time (days)	21.0
	Std. Dev. of Transit Time	3.15
	Service Freq.	52
	Avg. Shipment Size	7.0
Standard Air Freight	Freight Rate / FEU	$12,600
	Transit Time (days)	3.0
	Std. Dev. of Transit Time	0.50
	Service Freq.	365
	Avg. Shipment Size	1.0
FastShip	Freight Rate / FEU	$1,800
	Transit Time (days)	7.0
	Std. Dev. of Transit Time	0.17
	Service Freq.	156
	Avg. Shipment Size	2.3

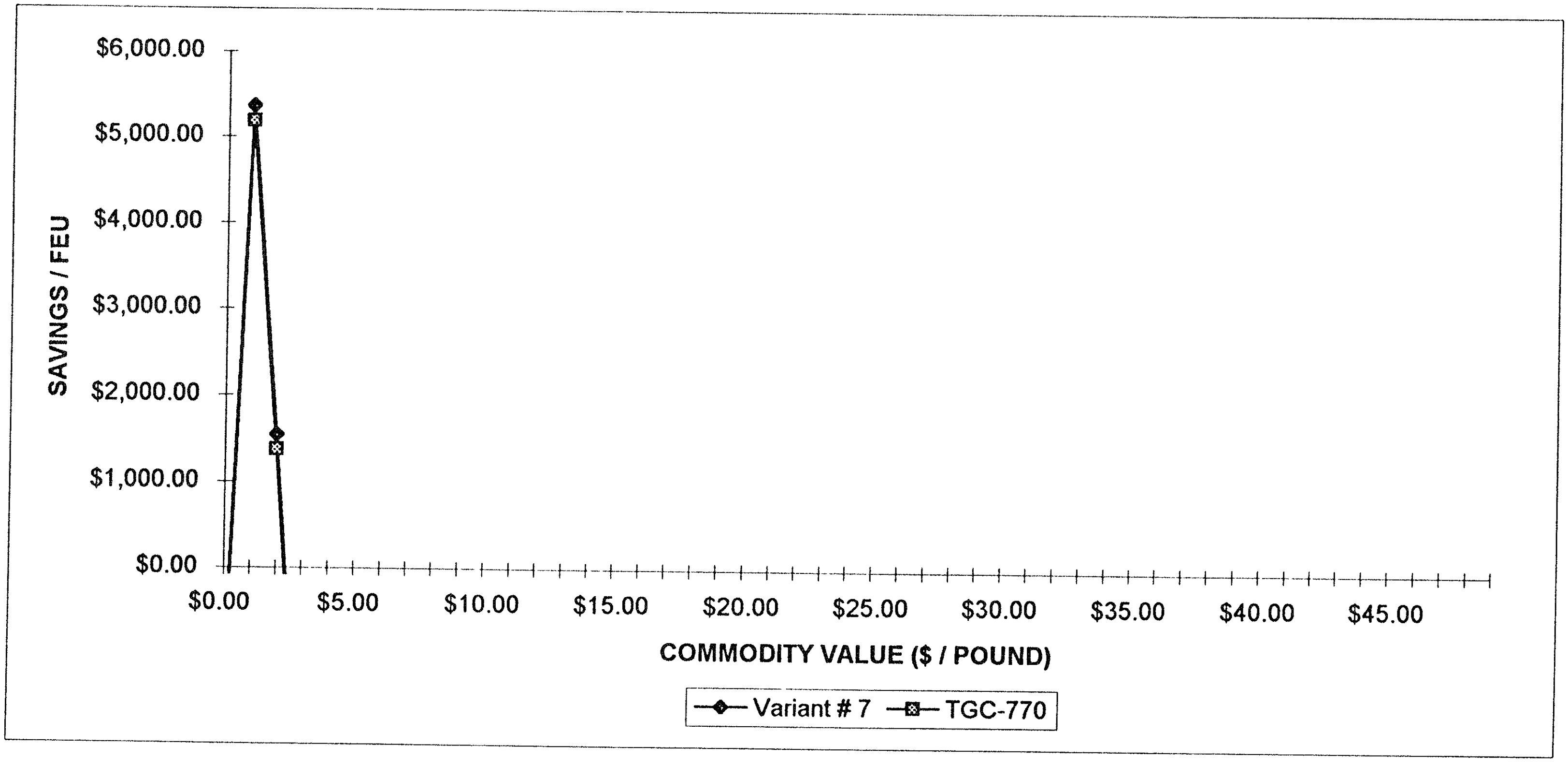

TOTAL LOGISTICS COST MODEL: SENSITIVITY ANALYSIS
PERISHABLE COMMODITY E

FEUs Shipped (Actual)	365
Density (lb. / Cu.Ft.)	10.7
Value Density ($ / lb.)	$1 - $50
Cubic Value ($ / Cu.Ft.)	$11 - $533
Tons per FEU	12.5
Lbs. per FEU	27,649
Value per FEU	$27,558 +
Annual Carrying Charge	22.5%
Demand Period	365
Shelf Life (Days)	9
Salvage Value	50%
Decay Parameter	4.0
Std. Devs. for Safety Stock	3.00
Warehouse Cost ($ / lb. / year)	$0.00
Storability (FEU load Factor)	85%

Standard Ocean	Freight Rate / FEU	$1,800
	Transit Time (days)	21.0
	Std. Dev. of Transit Time	3.15
	Service Freq.	52
	Avg. Shipment Size	7.0
Standard Air Freight	Freight Rate / FEU	$12,600
	Transit Time (days)	3.0
	Std. Dev. of Transit Time	0.50
	Service Freq.	365
	Avg. Shipment Size	1.0
FastShip	Freight Rate / FEU	$1,800
	Transit Time (days)	7.0
	Std. Dev. of Transit Time	0.17
	Service Freq.	156
	Avg. Shipment Size	2.3

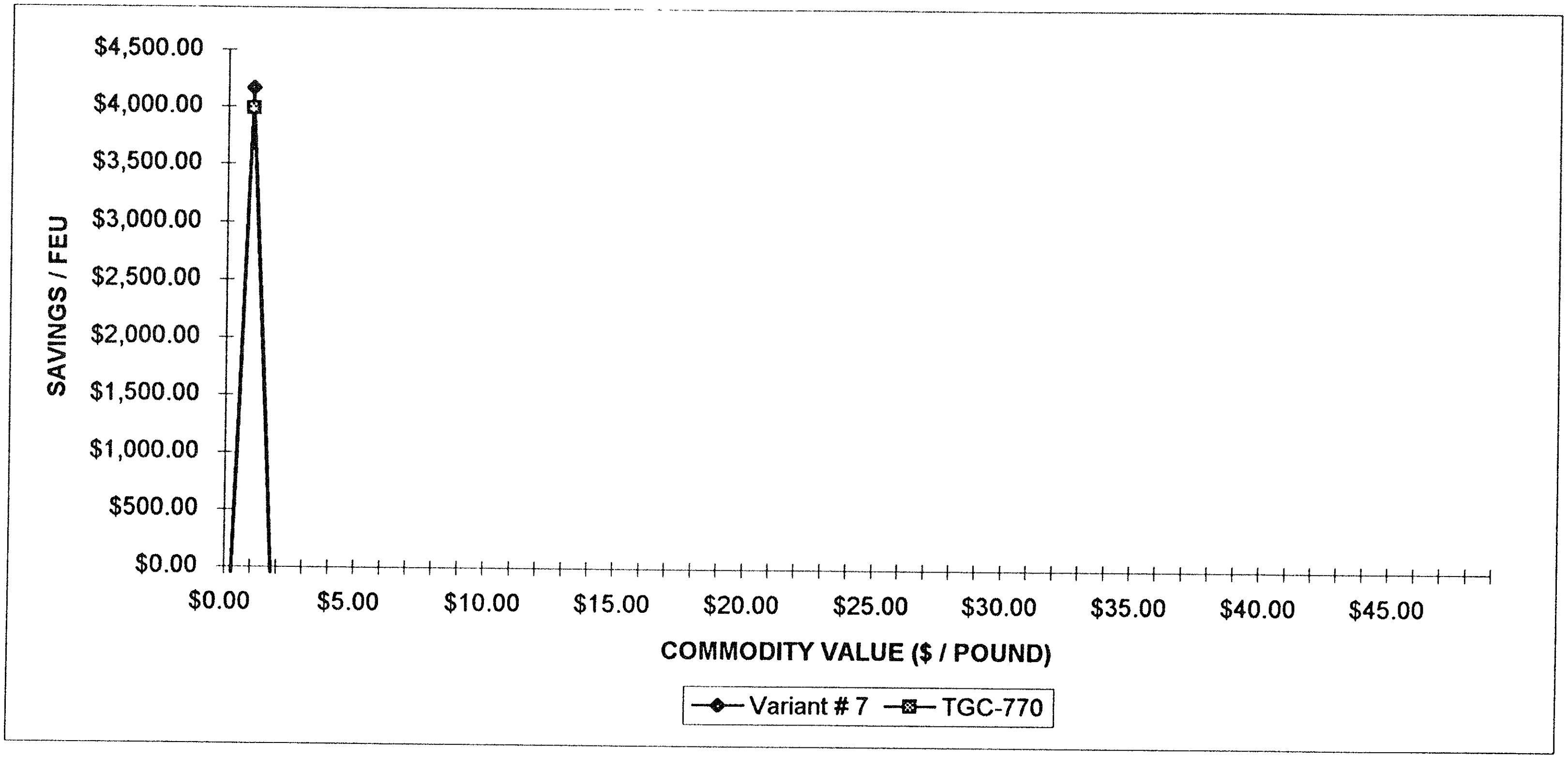

TOTAL LOGISTICS COST MODEL: SENSITIVITY ANALYSIS

PERISHABLE COMMODITY F

FEUs Shipped (Actual)	365
Density (lb. / Cu.Ft.)	10.7
Value Density ($ / lb.)	$1 - $50
Cubic Value ($ / Cu.Ft.)	$11 - $533
Tons per FEU	12.5
Lbs. per FEU	27,649
Value per FEU	$27,558 +
Annual Carrying Charge	22.5%
Demand Period	365
Shelf Life (Days)	9
Salvage Value	50%
Decay Parameter	8.0
Std. Devs. for Safety Stock	3.00
Warehouse Cost ($ / lb. / year)	$0.00
Storability (FEU load Factor)	85%

Standard Ocean	Freight Rate / FEU	$1,800
	Transit Time (days)	21.0
	Std. Dev. of Transit Time	3.15
	Service Freq.	52
	Avg. Shipment Size	7.0
Standard Air Freight	Freight Rate / FEU	$12,600
	Transit Time (days)	3.0
	Std. Dev. of Transit Time	0.50
	Service Freq.	365
	Avg. Shipment Size	1.0
FastShip	Freight Rate / FEU	$1,800
	Transit Time (days)	7.0
	Std. Dev. of Transit Time	0.17
	Service Freq.	156
	Avg. Shipment Size	2.3

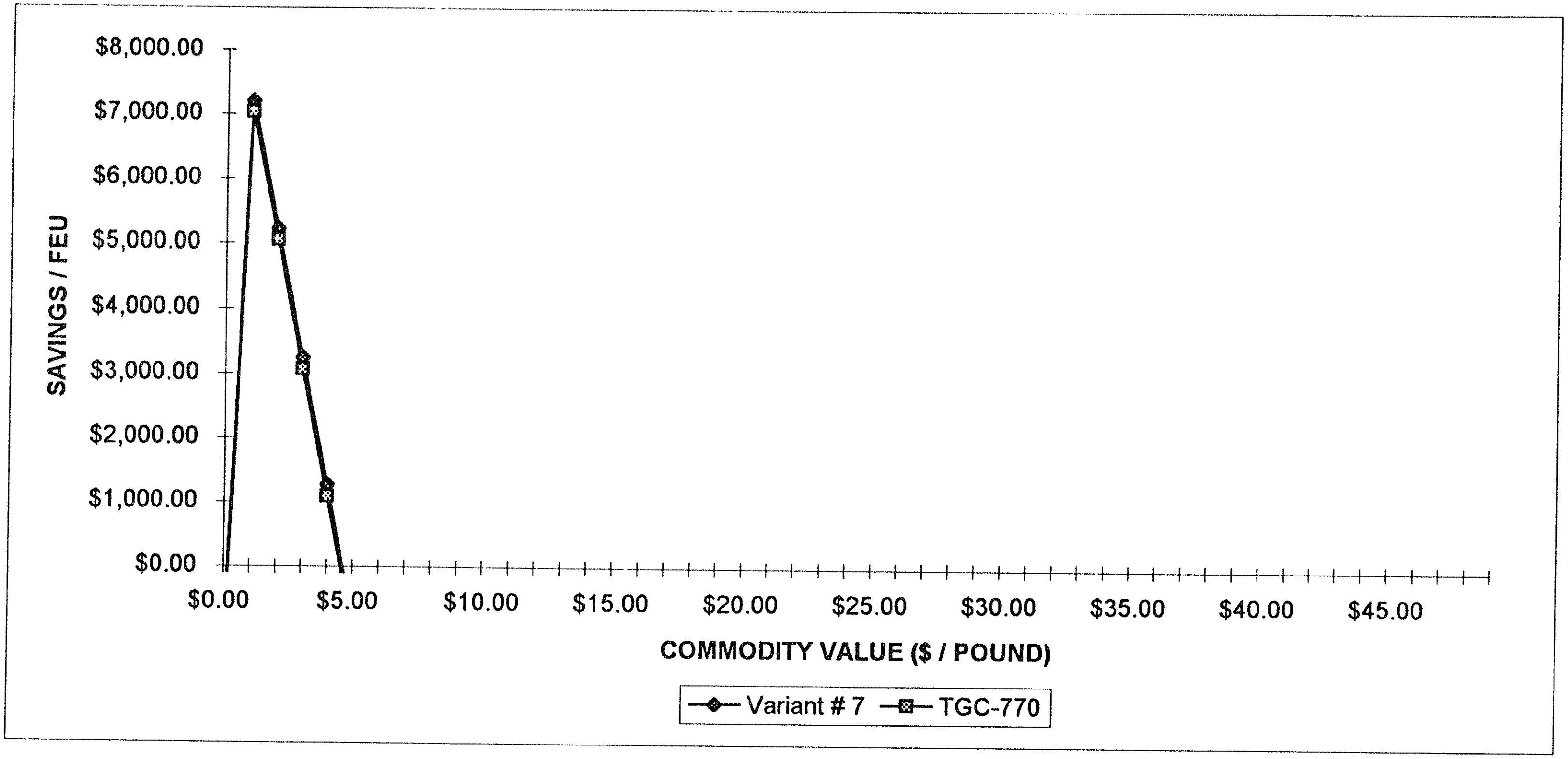

A3.3 : Model of latent and stimulated demand

MODEL INPUT CONSTANTS AND PARAMETERS

3040 cu.ft./high cube FEU 2205 Lb. / tonne 59000 lb. / FEU

1992 DATA: CONTAINERIZED COMMODITIES, PORT OF NEW YORK

DESCRIPTION	Data Source	Marad - NY_E	Marad - NY_E	Marad - NY_E	Marad - NY_E	Marad - NY_E	Marad - NY_E
	Commodity Description	DATA PROCESS MACHINES, MAGN. READER, ETC.	SWEATERS, PULLOVERS, VESTS, ETC., KNIT OR CROCHETED	BREAD, PASTRY, CAKES, ETC, FRESH	FISH, FRESH OR CHILLED (NO FILLETS)	CUT FLOWERS, FRESH	FIRST CLASS MAIL, NEWS-PAPERS
	FEUs Shipped (annually)	7,843	112	134	57	14	86
COMMODITY	Density (lb. / Cu.Ft.)	20.0	12.0	14.0	31.0	5.0	33.0
ATTRIBUTES	Value Density ($ / lb.)	$10.82	$6.37	$0.96	$1.55	$5.46	$2.09
	Cubic Value ($ / Cu.Ft.)	$216.40	$76.44	$13.44	$48.05	$27.30	$68.97
	Tonnes per FEU	23.44	14.89	16.41	26.76	5.86	26.76
	Lbs. per FEU	51,680	32,832	36,176	59,000	12,920	59,000
	Value per FEU	$559,178	$209,140	$34,729	$91,450	$70,543	$123,310
	Annual Carrying Charge	22.5%	22.5%	22.5%	22.5%	22.5%	22.5%
	Demand Period	365	365	365	365	365	365
	Shelf Life (Days)	365	90	21	14	7	30
	Salvage Value	75%	50%	40%	25%	0%	40%
	Decay Parameter	2.0	3.0	4.0	3.0	2.5	2.0
	Stock-Out Cost (Std. Devs. for Safety Stock)	3.00	3.00	3.00	3.00	1.64	1.64
	Warehouse Cost ($ / lb. / year)	$0.00	$0.00	$0.00	$0.00	$0.00	$0.00
	Daily Sales (FEU)	21.49	0.31	0.37	0.16	0.04	0.24
	Coef. of Var. of Daily Sales	300%	200%	100%	150%	300%	100%
	Std. Dev. of Daily Sales	64.46	0.61	0.37	0.23	0.12	0.24
	Storability (FEU load Factor)	85%	90%	85%	90%	85%	90%
MODAL	Freight Rate / FEU	$1,800	$1,800	$1,800	$1,800	$1,800	$1,800
CHARACTERISTICS	Transit Time (days)	21.0	21.0	21.0	21.0	21.0	21.0
OCEAN FREIGHT	Std. Dev. of Transit Time	3.15	3.15	3.15	3.15	3.15	3.15
	Service Freq. (Shipments per Demand Period)	52	52	52	52	52	52
	Avg. Shipment Size	150.8	2.2	2.6	1.1	0.3	1.7
MODAL	Freight Rate / FEU	$12,600	$12,600	$12,600	$12,600	$12,600	$12,600
CHARACTERISTICS	Transit Time (days)	3.0	3.0	3.0	3.0	3.0	3.0
AIR FREIGHT	Std. Dev. of Transit Time	0.5	0.5	0.5	0.5	0.5	0.5
	Service Freq. (Shipments per Demand Period)	365	365	365	365	365	365
	Avg. Shipment Size	21.5	0.3	0.4	0.2	0.0	0.2
MODAL	Freight Rate / FEU	$1,800	$1,800	$1,800	$1,800	$1,800	$1,800
CHARACTERISTICS	Transit Time (days)	7.0	7.0	7.0	7.0	7.0	7.0
FASTSHIP	Std. Dev. of Transit Time	0.17	0.17	0.17	0.17	0.17	0.17
	Service Freq. (Shipments per Demand Period)	156	156	156	156	156	156
	Avg. Shipment Size	50.3	0.7	0.9	0.4	0.1	0.6
MODEL RESULTS:	Perishable Cost / FEU	$462.75	$1,328.43	$20,837.38	$68,587.50	$70,543.20	$36,253.14
OCEAN FREIGHT	Origin Inventory Cost / FEU	$1,209.76	$452.47	$75.13	$197.85	$152.62	$266.78
	Origin Warehouse Cost / FEU	$0.00	$0.00	$0.00	$0.00	$0.00	$0.00
	In-transit Inventory Cost / FEU	$7,238.67	$2,707.36	$449.57	$1,183.84	$913.20	$1,596.27
	Cycle Inventory / FEU	$1,209.76	$452.47	$75.13	$197.85	$152.62	$266.78
	Safety Stock Cost/ FEU	$8,841.10	$2,384.16	$264.35	$857.62	$609.73	$513.11
	Freight Rate / FEU	$1,800.00	$1,800.00	$1,800.00	$1,800.00	$1,800.00	$1,800.00
	Total Logistics Cost / FEU	$20,762.03	$9,124.88	$23,501.57	$72,824.66	$74,171.36	$40,696.08
MODEL RESULTS:	Perishable Cost / FEU	$9.44	$3.87	$8.68	$674.88	$8,482.29	$739.86
AIR FREIGHT	Origin Inventory Cost / FEU	$172.35	$64.46	$10.70	$28.19	$21.74	$38.01
	Origin Warehouse Cost / FEU	$0.00	$0.00	$0.00	$0.00	$0.00	$0.00
	In-transit Inventory Cost / FEU	$1,034.10	$386.77	$64.22	$169.12	$130.46	$228.04
	Cycle Inventory / FEU	$172.35	$64.46	$10.70	$28.19	$21.74	$38.01
	Safety Stock Cost / FEU	$3,145.08	$797.34	$71.81	$267.40	$216.90	$139.38
	Freight Rate / FEU	$12,600.00	$12,600.00	$12,600.00	$12,600.00	$12,600.00	$12,600.00
	Total Logistics Cost / FEU	$17,133.32	$13,916.90	$12,766.12	$13,767.77	$21,473.13	$13,783.29
MODEL RESULTS:	Perishable Cost / FEU	$51.42	$49.20	$257.25	$8,573.44	$70,543.20	$4,028.13
FASTSHIP	Origin Inventory Cost / FEU	$403.25	$150.82	$25.04	$65.95	$50.87	$88.93
	Origin Warehouse Cost / FEU	$0.00	$0.00	$0.00	$0.00	$0.00	$0.00
	In-transit Inventory Cost / FEU	$2,412.89	$902.45	$149.86	$394.61	$304.40	$532.09
	Cycle Inventory / FEU	$403.25	$150.82	$25.04	$65.95	$50.87	$88.93
	Safety Stock Cost / FEU	$4,748.45	$1,184.96	$98.82	$389.06	$327.48	$191.81
	Freight Rate / FEU	$1,800.00	$1,800.00	$1,800.00	$1,800.00	$1,800.00	$1,800.00
	Total Logistics Cost / FEU	$9,819.27	$4,238.26	$2,356.02	$11,289.01	$73,076.82	$6,729.88
MODEL RESULTS:	Logistics Cost Savings / FEU	$7,314.05	$4,886.62	$10,410.10	$2,478.77	($51,603.69)	$7,053.41
SUMMARY	w/ 94% rate premium	$5,614.85	$3,187.42	$8,710.90	$779.57	($53,302.89)	$5,354.21
	w/ 100% rate premium	$5,514.05	$3,086.62	$8,610.10	$678.77	($53,403.69)	$5,253.41
	Value Created / Value	1.31%	2.34%	29.98%	2.71%	(73.15%)	5.72%
	w/ 94% rate premium	1.00%	1.52%	25.08%	0.85%	(75.56%)	4.34%
	w/ 100% rate premium	0.99%	1.48%	24.79%	0.74%	(75.70%)	4.26%
LATEND DEMAND	Base Elasticity	-1.00	-1.00	-1.00	-1.00	-1.00	-1.00
CHARACTERISTICS	Own Price Elasticity	-1.24	-0.94	-1.20	-1.06	-1.84	-0.20
	Import Elasticity	-1.62	-1.62	-1.62	-1.62	-1.62	-1.62
	Applied Elasticity	-1.29	-1.19	-1.27	-1.23	-1.49	-0.94
	Stimulated demand (%)	1.29%	1.81%	31.94%	1.05%	0.00%	4.08%
	Exports (FEU)	7,842.90	111.96	134.24	56.60	14.22	86.39
	Stimulated demand (FEU)	101.33	2.02	42.87	0.59	0.00	3.53

VARIANT # 1

MODEL INPUT CONSTANTS AND PARAMETERS

3040 cu.ft./high cube FEU   2205 Lb. / tonne   59000 lb. / FEU

1992 DATA: CONTAINERIZED COMMODITIES, PORT OF NEW YORK

DESCRIPTION	Data Source	Marad - NY_E	Marad - NY_E	Marad - NY_E	Marad - NY_E	Marad - NY_E	Marad - NY_E
	Commodity Description	DATA PROCESS MACHINES; MAGN READER, ETC	SWEATERS, PULLOVERS, VESTS, ETC., KNIT OR CROCHETED	BREAD, PASTRY, CAKES, ETC; FRESH	FISH, FRESH OR CHILLED (NO FILLETS)	CUT FLOWERS, FRESH	FIRST CLASS MAIL, NEWS-PAPERS
	FEUs Shipped (annually)	7,843	112	134	57	14	86
COMMODITY	Density (lb. / Cu.Ft.)	20.0	12.0	14.0	31.0	5.0	33.0
ATTRIBUTES	Value Density ($ / lb.)	$10.82	$6.37	$0.96	$1.55	$5.46	$2.09
	Cubic Value ($ / Cu.Ft.)	$216.40	$76.44	$13.44	$48.05	$27.30	$68.97
	Tonnes per FEU	23.44	14.89	16.41	26.76	5.86	26.76
	Lbs. per FEU	51,680	32,832	36,176	59,000	12,920	59,000
	Value per FEU	$559,178	$209,140	$34,729	$91,450	$70,543	$123,310
	Annual Carrying Charge	22.5%	22.5%	22.5%	22.5%	22.5%	22.5%
	Demand Period	365	365	365	365	365	365
	Shelf Life (Days)	365	90	21	14	7	30
	Salvage Value	75%	50%	40%	25%	0%	40%
	Decay Parameter	2.0	3.0	4.0	3.0	2.5	2.0
	Stock-Out Cost (Std. Devs. for Safety Stock)	3.00	3.00	3.00	3.00	1.64	1.64
	Warehouse Cost ($ / lb. / year)	$0.00	$0.00	$0.00	$0.00	$0.00	$0.00
	Daily Sales (FEU)	21.49	0.31	0.37	0.16	0.04	0.24
	Coef. of Var. of Daily Sales	300%	200%	100%	150%	300%	100%
	Std. Dev. of Daily Sales	64.46	0.61	0.37	0.23	0.12	0.24
	Storability (FEU load Factor)	85%	90%	85%	90%	85%	90%
MODAL	Freight Rate / FEU	$1,800	$1,800	$1,800	$1,800	$1,800	$1,800
CHARACTERISTICS	Transit Time (days)	21.0	21.0	21.0	21.0	21.0	21.0
OCEAN FREIGHT	Std. Dev. of Transit Time	3.15	3.15	3.15	3.15	3.15	3.15
	Service Freq. (Shipments per Demand Period)	52	52	52	52	52	52
	Avg. Shipment Size	150.8	2.2	2.6	1.1	0.3	1.7
MODAL	Freight Rate / FEU	$12,600	$12,600	$12,600	$12,600	$12,600	$12,600
CHARACTERISTICS	Transit Time (days)	3.0	3.0	3.0	3.0	3.0	3.0
AIR FREIGHT	Std. Dev. of Transit Time	0.5	0.5	0.5	0.5	0.5	0.5
	Service Freq. (Shipments per Demand Period)	365	365	365	365	365	365
	Avg. Shipment Size	21.5	0.3	0.4	0.2	0.0	0.2
MODAL	Freight Rate / FEU	$1,800	$1,800	$1,800	$1,800	$1,800	$1,800
CHARACTERISTICS	Transit Time (days)	7.0	7.0	7.0	7.0	7.0	7.0
FASTSHIP	Std. Dev. of Transit Time	0.17	0.17	0.17	0.17	0.17	0.17
	Service Freq. (Shipments per Demand Period)	156	156	156	156	156	156
	Avg. Shipment Size	50.3	0.7	0.9	0.4	0.1	0.6
MODEL RESULTS:	Perishable Cost / FEU	$462.75	$1,328.43	$20,837.38	$68,587.50	$70,543.20	$36,253.14
OCEAN FREIGHT	Origin Inventory Cost / FEU	$1,209.76	$452.47	$75.13	$197.85	$152.62	$266.78
	Origin Warehouse Cost / FEU	$0.00	$0.00	$0.00	$0.00	$0.00	$0.00
	In-transit Inventory Cost / FEU	$7,238.67	$2,707.36	$449.57	$1,183.84	$913.20	$1,596.27
	Cycle Inventory / FEU	$1,209.76	$452.47	$75.13	$197.85	$152.62	$266.78
	Safety Stock Cost/ FEU	$8,841.10	$2,384.16	$264.35	$857.62	$609.73	$513.11
	Freight Rate / FEU	$1,800.00	$1,800.00	$1,800.00	$1,800.00	$1,800.00	$1,800.00
	Total Logistics Cost / FEU	$20,762.03	$9,124.88	$23,501.57	$72,824.66	$74,171.36	$40,696.08
MODEL RESULTS:	Perishable Cost / FEU	$9.44	$3.87	$8.68	$674.88	$8,482.29	$739.86
AIR FREIGHT	Origin Inventory Cost / FEU	$172.35	$64.46	$10.70	$28.19	$21.74	$38.01
	Origin Warehouse Cost / FEU	$0.00	$0.00	$0.00	$0.00	$0.00	$0.00
	In-transit Inventory Cost / FEU	$1,034.10	$386.77	$64.22	$169.12	$130.46	$228.04
	Cycle Inventory / FEU	$172.35	$64.46	$10.70	$28.19	$21.74	$38.01
	Safety Stock Cost / FEU	$3,145.08	$797.34	$71.81	$267.40	$216.90	$139.38
	Freight Rate / FEU	$12,600.00	$12,600.00	$12,600.00	$12,600.00	$12,600.00	$12,600.00
	Total Logistics Cost / FEU	$17,133.32	$13,916.90	$12,766.12	$13,767.77	$21,473.13	$13,783.29
MODEL RESULTS:	Perishable Cost / FEU	$51.42	$49.20	$257.25	$8,573.44	$70,543.20	$4,028.13
FASTSHIP	Origin Inventory Cost / FEU	$403.25	$150.82	$25.04	$65.95	$50.87	$88.93
	Origin Warehouse Cost / FEU	$0.00	$0.00	$0.00	$0.00	$0.00	$0.00
	In-transit Inventory Cost / FEU	$2,412.89	$902.45	$149.86	$394.61	$304.40	$532.09
	Cycle Inventory / FEU	$403.25	$150.82	$25.04	$65.95	$50.87	$88.93
	Safety Stock Cost / FEU	$4,748.45	$1,184.96	$98.82	$389.06	$327.48	$191.81
	Freight Rate / FEU	$1,800.00	$1,800.00	$1,800.00	$1,800.00	$1,800.00	$1,800.00
	Total Logistics Cost / FEU	$9,819.27	$4,238.26	$2,356.02	$11,289.01	$73,076.82	$6,729.88
MODEL RESULTS:	Logistics Cost Savings / FEU	$7,314.05	$4,886.62	$10,410.10	$2,478.77	($51,603.69)	$7,053.41
SUMMARY	w/ 93.7% rate premium	$5,627.45	$3,200.02	$8,723.50	$792.17	($53,290.29)	$5,366.81
	w/ 100% rate premium	$5,514.05	$3,086.62	$8,610.10	$678.77	($53,403.69)	$5,253.41
	Value Created / Value	1.31%	2.34%	29.98%	2.71%	(73.15%)	5.72%
	w/ 93.7% rate premium	1.01%	1.53%	25.12%	0.87%	(75.54%)	4.35%
	w/ 100% rate premium	0.99%	1.48%	24.79%	0.74%	(75.70%)	4.26%
LATEND DEMAND	Base Elasticity	-1.00	-1.00	-1.00	-1.00	-1.00	-1.00
CHARACTERISTICS	Own Price Elasticity	-1.24	-0.94	-1.20	-1.06	-1.84	-0.20
	Import Elasticity	-1.62	-1.62	-1.62	-1.62	-1.62	-1.62
	Applied Elasticity	-1.29	-1.19	-1.27	-1.23	-1.49	-0.94
	Stimulated demand (%)	1.29%	1.82%	31.98%	1.06%	0.00%	4.09%
	Exports (FEU)	7,842.90	111.96	134.24	56.60	14.22	86.39
	Stimulated demand (FEU)	101.56	2.03	42.94	0.60	0.00	3.53

VARIANT # 2

MODEL INPUT CONSTANTS AND PARAMETERS

3040 cu.ft./high cube FEU 2205 Lb. / tonne 59000 lb. / FEU

1992 DATA: CONTAINERIZED COMMODITIES, PORT OF NEW YORK

DESCRIPTION	Data Source	Marad - NY_E	Marad - NY_E	Marad - NY_E	Marad - NY_E	Marad - NY_E	Marad - NY_E
	Commodity Description	DATA PROCESS MACHINES, MAGN. READER, ETC	SWEATERS, PULLOVERS, VESTS, ETC., KNIT OR CROCHETED	BREAD, PASTRY, CAKES, ETC; FRESH	FISH, FRESH OR CHILLED (NO FILLETS)	CUT FLOWERS, FRESH	FIRST CLASS MAIL, NEWS-PAPERS
	FEUs Shipped (annually)	7,843	112	134	57	14	86
COMMODITY	Density (lb. / Cu.Ft.)	20.0	12.0	14.0	31.0	5.0	33.0
ATTRIBUTES	Value Density ($ / lb.)	$10.82	$6.37	$0.96	$1.55	$5.46	$2.09
	Cubic Value ($ / Cu.Ft.)	$216.40	$76.44	$13.44	$48.05	$27.30	$68.97
	Tonnes per FEU	23.44	14.89	16.41	26.76	5.86	26.76
	Lbs. per FEU	51,680	32,832	36,176	59,000	12,920	59,000
	Value per FEU	$559,178	$209,140	$34,729	$91,450	$70,543	$123,310
	Annual Carrying Charge	22.5%	22.5%	22.5%	22.5%	22.5%	22.5%
	Demand Period	365	365	365	365	365	365
	Shelf Life (Days)	365	90	21	14	7	30
	Salvage Value	75%	50%	40%	25%	0%	40%
	Decay Parameter	2.0	3.0	4.0	3.0	2.5	2.0
	Stock-Out Cost (Std. Devs. for Safety Stock)	3.00	3.00	3.00	3.00	1.64	1.64
	Warehouse Cost ($ / lb. / year)	$0.00	$0.00	$0.00	$0.00	$0.00	$0.00
	Daily Sales (FEU)	21.49	0.31	0.37	0.16	0.04	0.24
	Coef. of Var. of Daily Sales	300%	200%	100%	150%	300%	100%
	Std. Dev. of Daily Sales	64.46	0.61	0.37	0.23	0.12	0.24
	Storability (FEU load Factor)	85%	90%	85%	90%	85%	90%
MODAL	Freight Rate / FEU	$1,800	$1,800	$1,800	$1,800	$1,800	$1,800
CHARACTERISTICS	Transit Time (days)	21.0	21.0	21.0	21.0	21.0	21.0
OCEAN FREIGHT	Std. Dev. of Transit Time	3.15	3.15	3.15	3.15	3.15	3.15
	Service Freq. (Shipments per Demand Period)	52	52	52	52	52	52
	Avg. Shipment Size	150.8	2.2	2.6	1.1	0.3	1.7
MODAL	Freight Rate / FEU	$12,600	$12,600	$12,600	$12,600	$12,600	$12,600
CHARACTERISTICS	Transit Time (days)	3.0	3.0	3.0	3.0	3.0	3.0
AIR FREIGHT	Std. Dev. of Transit Time	0.5	0.5	0.5	0.5	0.5	0.5
	Service Freq. (Shipments per Demand Period)	365	365	365	365	365	365
	Avg. Shipment Size	21.5	0.3	0.4	0.2	0.0	0.2
MODAL	Freight Rate / FEU	$1,800	$1,800	$1,800	$1,800	$1,800	$1,800
CHARACTERISTICS	Transit Time (days)	7.0	7.0	7.0	7.0	7.0	7.0
FASTSHIP	Std. Dev. of Transit Time	0.17	0.17	0.17	0.17	0.17	0.17
	Service Freq. (Shipments per Demand Period)	156	156	156	156	156	156
	Avg. Shipment Size	50.3	0.7	0.9	0.4	0.1	0.6
MODEL RESULTS:	Perishable Cost / FEU	$462.75	$1,328.43	$20,837.38	$68,587.50	$70,543.20	$36,253.14
OCEAN FREIGHT	Origin Inventory Cost / FEU	$1,209.76	$452.47	$75.13	$197.85	$152.62	$266.78
	Origin Warehouse Cost / FEU	$0.00	$0.00	$0.00	$0.00	$0.00	$0.00
	In-transit Inventory Cost / FEU	$7,238.67	$2,707.36	$449.57	$1,183.84	$913.20	$1,596.27
	Cycle Inventory / FEU	$1,209.76	$452.47	$75.13	$197.85	$152.62	$266.78
	Safety Stock Cost/ FEU	$8,841.10	$2,384.16	$264.35	$857.62	$609.73	$513.11
	Freight Rate / FEU	$1,800.00	$1,800.00	$1,800.00	$1,800.00	$1,800.00	$1,800.00
	Total Logistics Cost / FEU	$20,762.03	$9,124.88	$23,501.57	$72,824.66	$74,171.36	$40,696.08
MODEL RESULTS:	Perishable Cost / FEU	$9.44	$3.87	$8.68	$674.88	$8,482.29	$739.86
AIR FREIGHT	Origin Inventory Cost / FEU	$172.35	$64.46	$10.70	$28.19	$21.74	$38.01
	Origin Warehouse Cost / FEU	$0.00	$0.00	$0.00	$0.00	$0.00	$0.00
	In-transit Inventory Cost / FEU	$1,034.10	$386.77	$64.22	$169.12	$130.46	$228.04
	Cycle Inventory / FEU	$172.35	$64.46	$10.70	$28.19	$21.74	$38.01
	Safety Stock Cost / FEU	$3,145.08	$797.34	$71.81	$267.40	$216.90	$139.38
	Freight Rate / FEU	$12,600.00	$12,600.00	$12,600.00	$12,600.00	$12,600.00	$12,600.00
	Total Logistics Cost / FEU	$17,133.32	$13,916.90	$12,766.12	$13,767.77	$21,473.13	$13,783.29
MODEL RESULTS:	Perishable Cost / FEU	$51.42	$49.20	$257.25	$8,573.44	$70,543.20	$4,028.13
FASTSHIP	Origin Inventory Cost / FEU	$403.25	$150.82	$25.04	$65.95	$50.87	$88.93
	Origin Warehouse Cost / FEU	$0.00	$0.00	$0.00	$0.00	$0.00	$0.00
	In-transit Inventory Cost / FEU	$2,412.89	$902.45	$149.86	$394.61	$304.40	$532.09
	Cycle Inventory / FEU	$403.25	$150.82	$25.04	$65.95	$50.87	$88.93
	Safety Stock Cost / FEU	$4,748.45	$1,184.96	$98.82	$389.06	$327.48	$191.81
	Freight Rate / FEU	$1,800.00	$1,800.00	$1,800.00	$1,800.00	$1,800.00	$1,800.00
	Total Logistics Cost / FEU	$9,819.27	$4,238.26	$2,356.02	$11,289.01	$73,076.82	$6,729.88
MODEL RESULTS:	Logistics Cost Savings / FEU	$7,314.05	$4,886.62	$10,410.10	$2,478.77	($51,603.69)	$7,053.41
SUMMARY	w/ 93.5% rate premium	$5,631.05	$3,203.62	$8,727.10	$795.77	($53,286.69)	$5,370.41
	w/ 100% rate premium	$5,514.05	$3,086.62	$8,610.10	$678.77	($53,403.69)	$5,253.41
	Value Created / Value	1.31%	2.34%	29.98%	2.71%	(73.15%)	5.72%
	w/ 93.5% rate premium	1.01%	1.53%	25.13%	0.87%	(75.54%)	4.36%
	w/ 100% rate premium	0.99%	1.48%	24.79%	0.74%	(75.70%)	4.26%
LATEND DEMAND	Base Elasticity	-1.00	-1.00	-1.00	-1.00	-1.00	-1.00
CHARACTERISTICS	Own Price Elasticity	-1.24	-0.94	-1.20	-1.06	-1.84	-0.20
	Import Elasticity	-1.62	-1.62	-1.62	-1.62	-1.62	-1.62
	Applied Elasticity	-1.29	-1.19	-1.27	-1.23	-1.49	-0.94
	Stimulated demand (%)	1.30%	1.82%	32.00%	1.07%	0.00%	4.09%
	Exports (FEU)	7,842.90	111.96	134.24	56.60	14.22	86.39
	Stimulated demand (FEU)	101.62	2.04	42.95	0.60	0.00	3.54

VARIANT # 3

MODEL INPUT CONSTANTS AND PARAMETERS

3040 cu.ft./high cube FEU　2205 Lb. / tonne　59000 lb. / FEU

1992 DATA: CONTAINERIZED COMMODITIES, PORT OF NEW YORK

DESCRIPTION	Data Source	Marad - NY_E	Marad - NY_E	Marad - NY_E	Marad - NY_E	Marad - NY_E	Marad - NY_E
	Commodity Description	DATA PROCESS MACHINES; MAGN. READER, ETC.	SWEATERS, PULLOVERS, VESTS, ETC , KNIT OR CROCHETED	BREAD, PASTRY, CAKES, ETC; FRESH	FISH, FRESH OR CHILLED (NO FILLETS)	CUT FLOWERS, FRESH	FIRST CLASS MAIL, NEWS-PAPERS
	FEUs Shipped (annually)	7,843	112	134	57	14	86
COMMODITY	Density (lb. / Cu.Ft.)	20.0	12.0	14.0	31.0	5.0	33.0
ATTRIBUTES	Value Density ($ / lb.)	$10.82	$6.37	$0.96	$1.55	$5.46	$2.09
	Cubic Value ($ / Cu.Ft.)	$216.40	$76.44	$13.44	$48.05	$27.30	$68.97
	Tonnes per FEU	23.44	14.89	16.41	26.76	5.86	26.76
	Lbs. per FEU	51,680	32,832	36,176	59,000	12,920	59,000
	Value per FEU	$559,178	$209,140	$34,729	$91,450	$70,543	$123,310
	Annual Carrying Charge	22.5%	22.5%	22.5%	22.5%	22.5%	22.5%
	Demand Period	365	365	365	365	365	365
	Shelf Life (Days)	365	90	21	14	7	30
	Salvage Value	75%	50%	40%	25%	0%	40%
	Decay Parameter	2.0	3.0	4.0	3.0	2.5	2.0
	Stock-Out Cost (Std. Devs. for Safety Stock)	3.00	3.00	3.00	3.00	1.64	1.64
	Warehouse Cost ($ / lb. / year)	$0.00	$0.00	$0.00	$0.00	$0.00	$0.00
	Daily Sales (FEU)	21.49	0.31	0.37	0.16	0.04	0.24
	Coef. of Var. of Daily Sales	300%	200%	100%	150%	300%	100%
	Std. Dev. of Daily Sales	64.46	0.61	0.37	0.23	0.12	0.24
	Storability (FEU load Factor)	85%	90%	85%	90%	85%	90%
MODAL	Freight Rate / FEU	$1,800	$1,800	$1,800	$1,800	$1,800	$1,800
CHARACTERISTICS	Transit Time (days)	21.0	21.0	21.0	21.0	21.0	21.0
OCEAN FREIGHT	Std. Dev. of Transit Time	3.15	3.15	3.15	3.15	3.15	3.15
	Service Freq. (Shipments per Demand Period)	52	52	52	52	52	52
	Avg. Shipment Size	150.8	2.2	2.6	1.1	0.3	1.7
MODAL	Freight Rate / FEU	$12,600	$12,600	$12,600	$12,600	$12,600	$12,600
CHARACTERISTICS	Transit Time (days)	3.0	3.0	3.0	3.0	3.0	3.0
AIR FREIGHT	Std. Dev. of Transit Time	0.5	0.5	0.5	0.5	0.5	0.5
	Service Freq. (Shipments per Demand Period)	365	365	365	365	365	365
	Avg. Shipment Size	21.5	0.3	0.4	0.2	0.0	0.2
MODAL	Freight Rate / FEU	$1,800	$1,800	$1,800	$1,800	$1,800	$1,800
CHARACTERISTICS	Transit Time (days)	7.0	7.0	7.0	7.0	7.0	7.0
FASTSHIP	Std. Dev. of Transit Time	0.17	0.17	0.17	0.17	0.17	0.17
	Service Freq. (Shipments per Demand Period)	156	156	156	156	156	156
	Avg. Shipment Size	50.3	0.7	0.9	0.4	0.1	0.6
MODEL RESULTS:	Perishable Cost / FEU	$462.75	$1,328.43	$20,837.38	$68,587.50	$70,543.20	$36,253.14
OCEAN FREIGHT	Origin Inventory Cost / FEU	$1,209.76	$452.47	$75.13	$197.85	$152.62	$266.78
	Origin Warehouse Cost / FEU	$0.00	$0.00	$0.00	$0.00	$0.00	$0.00
	In-transit Inventory Cost / FEU	$7,238.67	$2,707.36	$449.57	$1,183.84	$913.20	$1,596.27
	Cycle Inventory / FEU	$1,209.76	$452.47	$75.13	$197.85	$152.62	$266.78
	Safety Stock Cost/ FEU	$8,841.10	$2,384.16	$264.35	$857.62	$609.73	$513.11
	Freight Rate / FEU	$1,800.00	$1,800.00	$1,800.00	$1,800.00	$1,800.00	$1,800.00
	Total Logistics Cost / FEU	$20,762.03	$9,124.88	$23,501.57	$72,824.66	$74,171.36	$40,696.08
MODEL RESULTS:	Perishable Cost / FEU	$9.44	$3.87	$8.68	$674.88	$8,482.29	$739.86
AIR FREIGHT	Origin Inventory Cost / FEU	$172.35	$64.46	$10.70	$28.19	$21.74	$38.01
	Origin Warehouse Cost / FEU	$0.00	$0.00	$0.00	$0.00	$0.00	$0.00
	In-transit Inventory Cost / FEU	$1,034.10	$386.77	$64.22	$169.12	$130.46	$228.04
	Cycle Inventory / FEU	$172.35	$64.46	$10.70	$28.19	$21.74	$38.01
	Safety Stock Cost / FEU	$3,145.08	$797.34	$71.81	$267.40	$216.90	$139.38
	Freight Rate / FEU	$12,600.00	$12,600.00	$12,600.00	$12,600.00	$12,600.00	$12,600.00
	Total Logistics Cost / FEU	$17,133.32	$13,916.90	$12,766.12	$13,767.77	$21,473.13	$13,783.29
MODEL RESULTS:	Perishable Cost / FEU	$51.42	$49.20	$257.25	$8,573.44	$70,543.20	$4,028.13
FASTSHIP	Origin Inventory Cost / FEU	$403.25	$150.82	$25.04	$65.95	$50.87	$88.93
	Origin Warehouse Cost / FEU	$0.00	$0.00	$0.00	$0.00	$0.00	$0.00
	In-transit Inventory Cost / FEU	$2,412.89	$902.45	$149.86	$394.61	$304.40	$532.09
	Cycle Inventory / FEU	$403.25	$150.82	$25.04	$65.95	$50.87	$88.93
	Safety Stock Cost / FEU	$4,748.45	$1,184.96	$98.82	$389.06	$327.48	$191.81
	Freight Rate / FEU	$1,800.00	$1,800.00	$1,800.00	$1,800.00	$1,800.00	$1,800.00
	Total Logistics Cost / FEU	$9,819.27	$4,238.26	$2,356.02	$11,289.01	$73,076.82	$6,729.88
MODEL RESULTS:	Logistics Cost Savings / FEU	$7,314.05	$4,886.62	$10,410.10	$2,478.77	($51,603.69)	$7,053.41
SUMMARY	w/ 93% rate premium	$5,640.05	$3,212.62	$8,736.10	$804.77	($53,277.69)	$5,379.41
	w/ 100% rate premium	$5,514.05	$3,086.62	$8,610.10	$678.77	($53,403.69)	$5,253.41
	Value Created / Value	1.31%	2.34%	29.98%	2.71%	(73.15%)	5.72%
	w/ 93% rate premium	1.01%	1.54%	25.16%	0.88%	(75.52%)	4.36%
	w/ 100% rate premium	0.99%	1.48%	24.79%	0.74%	(75.70%)	4.26%
LATEND DEMAND	Base Elasticity	-1.00	-1.00	-1.00	-1.00	-1.00	-1.00
CHARACTERISTICS	Own Price Elasticity	-1.24	-0.94	-1.20	-1.06	-1.84	-0.20
	Import Elasticity	-1.62	-1.62	-1.62	-1.62	-1.62	-1.62
	Applied Elasticity	-1.29	-1.19	-1.27	-1.23	-1.49	-0.94
	Stimulated demand (%)	1.30%	1.82%	32.03%	1.08%	0.00%	4.10%
	Exports (FEU)	7,842.90	111.96	134.24	56.60	14.22	86.39
	Stimulated demand (FEU)	101.78	2.04	43.00	0.61	0.00	3.54

VARIANT # 4

MODEL INPUT CONSTANTS AND PARAMETERS

3040 cu.ft./high cube FEU **2205 Lb. / tonne** **59000 lb. / FEU**

1992 DATA: CONTAINERIZED COMMODITIES, PORT OF NEW YORK

DESCRIPTION	Data Source	Marad - NY_E AUTOMATIC	Marad - NY_E	Marad - NY_E	Marad - NY_E	Marad - NY_E	Marad - NY_E
	Commodity Description	DATA PROCESS MACHINES; MAGN READER, ETC	SWEATERS, PULLOVERS, VESTS, ETC., KNIT OR CROCHETED	BREAD, PASTRY, CAKES, ETC. FRESH	FISH, FRESH OR CHILLED (NO FILLETS)	CUT FLOWERS, FRESH	FIRST CLASS MAIL, NEWSPAPERS
	FEUs Shipped (annually)	7,843	112	134	57	14	86
COMMODITY	Density (lb. / Cu.Ft.)	20.0	12.0	14.0	31.0	5.0	33.0
ATTRIBUTES	Value Density ($ / lb.)	$10.82	$6.37	$0.96	$1.55	$5.46	$2.09
	Cubic Value ($ / Cu.Ft.)	$216.40	$76.44	$13.44	$48.05	$27.30	$68.97
	Tonnes per FEU	23.44	14.89	16.41	26.76	5.86	26.76
	Lbs. per FEU	51,680	32,832	36,176	59,000	12,920	59,000
	Value per FEU	$559,178	$209,140	$34,729	$91,450	$70,543	$123,310
	Annual Carrying Charge	22.5%	22.5%	22.5%	22.5%	22.5%	22.5%
	Demand Period	365	365	365	365	365	365
	Shelf Life (Days)	365	90	21	14	7	30
	Salvage Value	75%	50%	40%	25%	0%	40%
	Decay Parameter	2.0	3.0	4.0	3.0	2.5	2.0
	Stock-Out Cost (Std. Devs. for Safety Stock)	3.00	3.00	3.00	3.00	1.64	1.64
	Warehouse Cost ($ / lb. / year)	$0.00	$0.00	$0.00	$0.00	$0.00	$0.00
	Daily Sales (FEU)	21.49	0.31	0.37	0.16	0.04	0.24
	Coef. of Var. of Daily Sales	300%	200%	100%	150%	300%	100%
	Std. Dev. of Daily Sales	64.46	0.61	0.37	0.23	0.12	0.24
	Storability (FEU load Factor)	85%	90%	85%	90%	85%	90%
MODAL	Freight Rate / FEU	$1,800	$1,800	$1,800	$1,800	$1,800	$1,800
CHARACTERISTICS	Transit Time (days)	21.0	21.0	21.0	21.0	21.0	21.0
OCEAN FREIGHT	Std. Dev. of Transit Time	3.15	3.15	3.15	3.15	3.15	3.15
	Service Freq. (Shipments per Demand Period)	52	52	52	52	52	52
	Avg. Shipment Size	150.8	2.2	2.6	1.1	0.3	1.7
MODAL	Freight Rate / FEU	$12,600	$12,600	$12,600	$12,600	$12,600	$12,600
CHARACTERISTICS	Transit Time (days)	3.0	3.0	3.0	3.0	3.0	3.0
AIR FREIGHT	Std. Dev. of Transit Time	0.5	0.5	0.5	0.5	0.5	0.5
	Service Freq. (Shipments per Demand Period)	365	365	365	365	365	365
	Avg. Shipment Size	21.5	0.3	0.4	0.2	0.0	0.2
MODAL	Freight Rate / FEU	$1,800	$1,800	$1,800	$1,800	$1,800	$1,800
CHARACTERISTICS	Transit Time (days)	7.0	7.0	7.0	7.0	7.0	7.0
FASTSHIP	Std. Dev. of Transit Time	0.17	0.17	0.17	0.17	0.17	0.17
	Service Freq. (Shipments per Demand Period)	156	156	156	156	156	156
	Avg. Shipment Size	50.3	0.7	0.9	0.4	0.1	0.6
MODEL RESULTS:	Perishable Cost / FEU	$462.75	$1,328.43	$20,837.38	$68,587.50	$70,543.20	$36,253.14
OCEAN FREIGHT	Origin Inventory Cost / FEU	$1,209.76	$452.47	$75.13	$197.85	$152.62	$266.78
	Origin Warehouse Cost / FEU	$0.00	$0.00	$0.00	$0.00	$0.00	$0.00
	In-transit Inventory Cost / FEU	$7,238.67	$2,707.36	$449.57	$1,183.84	$913.20	$1,596.27
	Cycle Inventory / FEU	$1,209.76	$452.47	$75.13	$197.85	$152.62	$266.78
	Safety Stock Cost/ FEU	$8,841.10	$2,384.16	$264.35	$857.62	$609.73	$513.11
	Freight Rate / FEU	$1,800.00	$1,800.00	$1,800.00	$1,800.00	$1,800.00	$1,800.00
	Total Logistics Cost / FEU	$20,762.03	$9,124.88	$23,501.57	$72,824.66	$74,171.36	$40,696.08
MODEL RESULTS:	Perishable Cost / FEU	$9.44	$3.87	$8.68	$674.88	$8,482.29	$739.86
AIR FREIGHT	Origin Inventory Cost / FEU	$172.35	$64.46	$10.70	$28.19	$21.74	$38.01
	Origin Warehouse Cost / FEU	$0.00	$0.00	$0.00	$0.00	$0.00	$0.00
	In-transit Inventory Cost / FEU	$1,034.10	$386.77	$64.22	$169.12	$130.46	$228.04
	Cycle Inventory / FEU	$172.35	$64.46	$10.70	$28.19	$21.74	$38.01
	Safety Stock Cost / FEU	$3,145.08	$797.34	$71.81	$267.40	$216.90	$139.38
	Freight Rate / FEU	$12,600.00	$12,600.00	$12,600.00	$12,600.00	$12,600.00	$12,600.00
	Total Logistics Cost / FEU	$17,133.32	$13,916.90	$12,766.12	$13,767.77	$21,473.13	$13,783.29
MODEL RESULTS:	Perishable Cost / FEU	$51.42	$49.20	$257.25	$8,573.44	$70,543.20	$4,028.13
FASTSHIP	Origin Inventory Cost / FEU	$403.25	$150.82	$25.04	$65.95	$50.87	$88.93
	Origin Warehouse Cost / FEU	$0.00	$0.00	$0.00	$0.00	$0.00	$0.00
	In-transit Inventory Cost / FEU	$2,412.89	$902.45	$149.86	$394.61	$304.40	$532.09
	Cycle Inventory / FEU	$403.25	$150.82	$25.04	$65.95	$50.87	$88.93
	Safety Stock Cost / FEU	$4,748.45	$1,184.96	$98.82	$389.06	$327.48	$191.81
	Freight Rate / FEU	$1,800.00	$1,800.00	$1,800.00	$1,800.00	$1,800.00	$1,800.00
	Total Logistics Cost / FEU	$9,819.27	$4,238.26	$2,356.02	$11,289.01	$73,076.82	$6,729.88
MODEL RESULTS:	Logistics Cost Savings / FEU	$7,314.05	$4,886.62	$10,410.10	$2,478.77	($51,603.69)	$7,053.41
SUMMARY	w/ 91% rate premium	$5,676.05	$3,248.62	$8,772.10	$840.77	($53,241.69)	$5,415.41
	w/ 100% rate premium	$5,514.05	$3,086.62	$8,610.10	$678.77	($53,403.69)	$5,253.41
	Value Created / Value	1.31%	2.34%	29.98%	2.71%	(73.15%)	5.72%
	w/ 91% rate premium	1.02%	1.55%	25.26%	0.92%	(75.47%)	4.39%
	w/ 100% rate premium	0.99%	1.48%	24.79%	0.74%	(75.70%)	4.26%
LATEND DEMAND	Base Elasticity	-1.00	-1.00	-1.00	-1.00	-1.00	-1.00
CHARACTERISTICS	Own Price Elasticity	-1.24	-0.94	-1.20	-1.06	-1.84	-0.20
	Import Elasticity	-1.62	-1.62	-1.62	-1.62	-1.62	-1.62
	Applied Elasticity	-1.29	-1.19	-1.27	-1.23	-1.49	-0.94
	Stimulated demand (%)	1.31%	1.84%	32.16%	1.13%	0.00%	4.13%
	Exports (FEU)	7,842.90	111.96	134.24	56.60	14.22	86.39
	Stimulated demand (FEU)	102.43	2.06	43.18	0.64	0.00	3.57

VARIANT # 5

MODEL INPUT CONSTANTS AND PARAMETERS

3040 cu.ft./high cube FEU 2205 Lb. / tonne 59000 lb. / FEU

1992 DATA: CONTAINERIZED COMMODITIES, PORT OF NEW YORK

DESCRIPTION	Data Source	Marad - NY_E	Marad - NY_E	Marad - NY_E	Marad - NY_E	Marad - NY_E	Marad - NY_E
	Commodity Description	DATA PROCESS MACHINES; MAGN. READER, ETC.	SWEATERS, PULLOVERS, VESTS, ETC , KNIT OR CROCHETED	BREAD, PASTRY, CAKES, ETC, FRESH	FISH, FRESH OR CHILLED (NO FILLETS)	CUT FLOWERS, FRESH	FIRST CLASS MAIL, NEWS-PAPERS
	FEUs Shipped (annually)	7,843	112	134	57	14	86
COMMODITY	Density (lb. / Cu.Ft.)	20.0	12.0	14.0	31.0	5.0	33.0
ATTRIBUTES	Value Density ($ / lb.)	$10.82	$6.37	$0.96	$1.55	$5.46	$2.09
	Cubic Value ($ / Cu.Ft.)	$216.40	$76.44	$13.44	$48.05	$27.30	$68.97
	Tonnes per FEU	23.44	14.89	16.41	26.76	5.86	26.76
	Lbs. per FEU	51,680	32,832	36,176	59,000	12,920	59,000
	Value per FEU	$559,178	$209,140	$34,729	$91,450	$70,543	$123,310
	Annual Carrying Charge	22.5%	22.5%	22.5%	22.5%	22.5%	22.5%
	Demand Period	365	365	365	365	365	365
	Shelf Life (Days)	365	90	21	14	7	30
	Salvage Value	75%	50%	40%	25%	0%	40%
	Decay Parameter	2.0	3.0	4.0	3.0	2.5	2.0
	Stock-Out Cost (Std. Devs. for Safety Stock)	3.00	3.00	3.00	3.00	1.64	1.64
	Warehouse Cost ($ / lb. / year)	$0.00	$0.00	$0.00	$0.00	$0.00	$0.00
	Daily Sales (FEU)	21.49	0.31	0.37	0.16	0.04	0.24
	Coef. of Var. of Daily Sales	300%	200%	100%	150%	300%	100%
	Std. Dev. of Daily Sales	64.46	0.61	0.37	0.23	0.12	0.24
	Storability (FEU load Factor)	85%	90%	85%	90%	85%	90%
MODAL	Freight Rate / FEU	$1,800	$1,800	$1,800	$1,800	$1,800	$1,800
CHARACTERISTICS	Transit Time (days)	21.0	21.0	21.0	21.0	21.0	21.0
OCEAN FREIGHT	Std. Dev. of Transit Time	3.15	3.15	3.15	3.15	3.15	3.15
	Service Freq. (Shipments per Demand Period)	52	52	52	52	52	52
	Avg. Shipment Size	150.8	2.2	2.6	1.1	0.3	1.7
MODAL	Freight Rate / FEU	$12,600	$12,600	$12,600	$12,600	$12,600	$12,600
CHARACTERISTICS	Transit Time (days)	3.0	3.0	3.0	3.0	3.0	3.0
AIR FREIGHT	Std. Dev. of Transit Time	0.5	0.5	0.5	0.5	0.5	0.5
	Service Freq. (Shipments per Demand Period)	365	365	365	365	365	365
	Avg. Shipment Size	21.5	0.3	0.4	0.2	0.0	0.2
MODAL	Freight Rate / FEU	$1,800	$1,800	$1,800	$1,800	$1,800	$1,800
CHARACTERISTICS	Transit Time (days)	7.0	7.0	7.0	7.0	7.0	7.0
FASTSHIP	Std. Dev. of Transit Time	0.17	0.17	0.17	0.17	0.17	0.17
	Service Freq. (Shipments per Demand Period)	156	156	156	156	156	156
	Avg. Shipment Size	50.3	0.7	0.9	0.4	0.1	0.6
MODEL RESULTS:	Perishable Cost / FEU	$462.75	$1,328.43	$20,837.38	$68,587.50	$70,543.20	$36,253.14
OCEAN FREIGHT	Origin Inventory Cost / FEU	$1,209.76	$452.47	$75.13	$197.85	$152.62	$266.78
	Origin Warehouse Cost / FEU	$0.00	$0.00	$0.00	$0.00	$0.00	$0.00
	In-transit Inventory Cost / FEU	$7,238.67	$2,707.36	$449.57	$1,183.84	$913.20	$1,596.27
	Cycle Inventory / FEU	$1,209.76	$452.47	$75.13	$197.85	$152.62	$266.78
	Safety Stock Cost/ FEU	$8,841.10	$2,384.16	$264.35	$857.62	$609.73	$513.11
	Freight Rate / FEU	$1,800.00	$1,800.00	$1,800.00	$1,800.00	$1,800.00	$1,800.00
	Total Logistics Cost / FEU	$20,762.03	$9,124.88	$23,501.57	$72,824.66	$74,171.36	$40,696.08
MODEL RESULTS:	Perishable Cost / FEU	$9.44	$3.87	$8.68	$674.88	$8,482.29	$739.86
AIR FREIGHT	Origin Inventory Cost / FEU	$172.35	$64.46	$10.70	$28.19	$21.74	$38.01
	Origin Warehouse Cost / FEU	$0.00	$0.00	$0.00	$0.00	$0.00	$0.00
	In-transit Inventory Cost / FEU	$1,034.10	$386.77	$64.22	$169.12	$130.46	$228.04
	Cycle Inventory / FEU	$172.35	$64.46	$10.70	$28.19	$21.74	$38.01
	Safety Stock Cost / FEU	$3,145.08	$797.34	$71.81	$267.40	$216.90	$139.38
	Freight Rate / FEU	$12,600.00	$12,600.00	$12,600.00	$12,600.00	$12,600.00	$12,600.00
	Total Logistics Cost / FEU	$17,133.32	$13,916.90	$12,766.12	$13,767.77	$21,473.13	$13,783.29
MODEL RESULTS:	Perishable Cost / FEU	$51.42	$49.20	$257.25	$8,573.44	$70,543.20	$4,028.13
FASTSHIP	Origin Inventory Cost / FEU	$403.25	$150.82	$25.04	$65.95	$50.87	$88.93
	Origin Warehouse Cost / FEU	$0.00	$0.00	$0.00	$0.00	$0.00	$0.00
	In-transit Inventory Cost / FEU	$2,412.89	$902.45	$149.86	$394.61	$304.40	$532.09
	Cycle Inventory / FEU	$403.25	$150.82	$25.04	$65.95	$50.87	$88.93
	Safety Stock Cost / FEU	$4,748.45	$1,184.96	$98.82	$389.06	$327.48	$191.81
	Freight Rate / FEU	$1,800.00	$1,800.00	$1,800.00	$1,800.00	$1,800.00	$1,800.00
	Total Logistics Cost / FEU	$9,819.27	$4,238.26	$2,356.02	$11,289.01	$73,076.82	$6,729.88
MODEL RESULTS:	Logistics Cost Savings / FEU	$7,314.05	$4,886.62	$10,410.10	$2,478.77	($51,603.69)	$7,053.41
SUMMARY	w/ 90% rate premium	$5,694.05	$3,266.62	$8,790.10	$858.77	($53,223.69)	$5,433.41
	w/ 100% rate premium	$5,514.05	$3,086.62	$8,610.10	$678.77	($53,403.69)	$5,253.41
	Value Created / Value	1.31%	2.34%	29.98%	2.71%	(73.15%)	5.72%
	w/ 90% rate premium	1.02%	1.56%	25.31%	0.94%	(75.45%)	4.41%
	w/ 100% rate premium	0.99%	1.48%	24.79%	0.74%	(75.70%)	4.26%
LATEND DEMAND	Base Elasticity	-1.00	-1.00	-1.00	-1.00	-1.00	-1.00
CHARACTERISTICS	Own Price Elasticity	-1.24	-0.94	-1.20	-1.06	-1.84	-0.20
	Import Elasticity	-1.62	-1.62	-1.62	-1.62	-1.62	-1.62
	Applied Elasticity	-1.29	-1.19	-1.27	-1.23	-1.49	-0.94
	Stimulated demand (%)	1.31%	1.85%	32.23%	1.15%	0.00%	4.14%
	Exports (FEU)	7,842.90	111.96	134.24	56.60	14.22	86.39
	Stimulated demand (FEU)	102.76	2.08	43.26	0.65	0.00	3.58

VARIANT # 6

MODEL INPUT CONSTANTS AND PARAMETERS

3040 cu.ft./high cube FEU 2205 Lb. / tonne 59000 lb. / FEU

1992 DATA: CONTAINERIZED COMMODITIES, PORT OF NEW YORK

DESCRIPTION	Data Source	Marad - NY_E	Marad - NY_E	Marad - NY_E	Marad - NY_E	Marad - NY_E	Marad - NY_E
	Commodity Description	DATA PROCESS MACHINES, MAGN. READER, ETC	SWEATERS, PULLOVERS, VESTS, ETC , KNIT OR CROCHETED	BREAD, PASTRY, CAKES, ETC; FRESH	FISH, FRESH OR CHILLED (NO FILLETS)	CUT FLOWERS, FRESH	FIRST CLASS MAIL, NEWS-PAPERS
	FEUs Shipped (annually)	7,843	112	134	57	14	86
COMMODITY ATTRIBUTES	Density (lb. / Cu.Ft.)	20.0	12.0	14.0	31.0	5.0	33.0
	Value Density ($ / lb.)	$10.82	$6.37	$0.96	$1.55	$5.46	$2.09
	Cubic Value ($ / Cu.Ft.)	$216.40	$76.44	$13.44	$48.05	$27.30	$68.97
	Tonnes per FEU	23.44	14.89	16.41	26.76	5.86	26.76
	Lbs. per FEU	51,680	32,832	36,176	59,000	12,920	59,000
	Value per FEU	$559,178	$209,140	$34,729	$91,450	$70,543	$123,310
	Annual Carrying Charge	22.5%	22.5%	22.5%	22.5%	22.5%	22.5%
	Demand Period	365	365	365	365	365	365
	Shelf Life (Days)	365	90	21	14	7	30
	Salvage Value	75%	50%	40%	25%	0%	40%
	Decay Parameter	2.0	3.0	4.0	3.0	2.5	2.0
	Stock-Out Cost (Std. Devs. for Safety Stock)	3.00	3.00	3.00	3.00	1.64	1.64
	Warehouse Cost ($ / lb. / year)	$0.00	$0.00	$0.00	$0.00	$0.00	$0.00
	Daily Sales (FEU)	21.49	0.31	0.37	0.16	0.04	0.24
	Coef. of Var. of Daily Sales	300%	200%	100%	150%	300%	100%
	Std. Dev. of Daily Sales	64.46	0.61	0.37	0.23	0.12	0.24
	Storability (FEU load Factor)	85%	90%	85%	90%	85%	90%
MODAL CHARACTERISTICS OCEAN FREIGHT	Freight Rate / FEU	$1,800	$1,800	$1,800	$1,800	$1,800	$1,800
	Transit Time (days)	21.0	21.0	21.0	21.0	21.0	21.0
	Std. Dev. of Transit Time	3.15	3.15	3.15	3.15	3.15	3.15
	Service Freq. (Shipments per Demand Period)	52	52	52	52	52	52
	Avg. Shipment Size	150.8	2.2	2.6	1.1	0.3	1.7
MODAL CHARACTERISTICS AIR FREIGHT	Freight Rate / FEU	$12,600	$12,600	$12,600	$12,600	$12,600	$12,600
	Transit Time (days)	3.0	3.0	3.0	3.0	3.0	3.0
	Std. Dev. of Transit Time	0.5	0.5	0.5	0.5	0.5	0.5
	Service Freq. (Shipments per Demand Period)	365	365	365	365	365	365
	Avg. Shipment Size	21.5	0.3	0.4	0.2	0.0	0.2
MODAL CHARACTERISTICS FASTSHIP	Freight Rate / FEU	$1,800	$1,800	$1,800	$1,800	$1,800	$1,800
	Transit Time (days)	7.0	7.0	7.0	7.0	7.0	7.0
	Std. Dev. of Transit Time	0.17	0.17	0.17	0.17	0.17	0.17
	Service Freq. (Shipments per Demand Period)	156	156	156	156	156	156
	Avg. Shipment Size	50.3	0.7	0.9	0.4	0.1	0.6
MODEL RESULTS: OCEAN FREIGHT	Perishable Cost / FEU	$462.75	$1,328.43	$20,837.38	$68,587.50	$70,543.20	$36,253.14
	Origin Inventory Cost / FEU	$1,209.76	$452.47	$75.13	$197.85	$152.62	$266.78
	Origin Warehouse Cost / FEU	$0.00	$0.00	$0.00	$0.00	$0.00	$0.00
	In-transit Inventory Cost / FEU	$7,238.67	$2,707.36	$449.57	$1,183.84	$913.20	$1,596.27
	Cycle Inventory / FEU	$1,209.76	$452.47	$75.13	$197.85	$152.62	$266.78
	Safety Stock Cost/ FEU	$8,841.10	$2,384.16	$264.35	$857.62	$609.73	$513.11
	Freight Rate / FEU	$1,800.00	$1,800.00	$1,800.00	$1,800.00	$1,800.00	$1,800.00
	Total Logistics Cost / FEU	$20,762.03	$9,124.88	$23,501.57	$72,824.66	$74,171.36	$40,696.08
MODEL RESULTS: AIR FREIGHT	Perishable Cost / FEU	$9.44	$3.87	$8.68	$674.88	$8,482.29	$739.86
	Origin Inventory Cost / FEU	$172.35	$64.46	$10.70	$28.19	$21.74	$38.01
	Origin Warehouse Cost / FEU	$0.00	$0.00	$0.00	$0.00	$0.00	$0.00
	In-transit Inventory Cost / FEU	$1,034.10	$386.77	$64.22	$169.12	$130.46	$228.04
	Cycle Inventory / FEU	$172.35	$64.46	$10.70	$28.19	$21.74	$38.01
	Safety Stock Cost / FEU	$3,145.08	$797.34	$71.81	$267.40	$216.90	$139.38
	Freight Rate / FEU	$12,600.00	$12,600.00	$12,600.00	$12,600.00	$12,600.00	$12,600.00
	Total Logistics Cost / FEU	$17,133.32	$13,916.90	$12,766.12	$13,767.77	$21,473.13	$13,783.29
MODEL RESULTS: FASTSHIP	Perishable Cost / FEU	$51.42	$49.20	$257.25	$8,573.44	$70,543.20	$4,028.13
	Origin Inventory Cost / FEU	$403.25	$150.82	$25.04	$65.95	$50.87	$88.93
	Origin Warehouse Cost / FEU	$0.00	$0.00	$0.00	$0.00	$0.00	$0.00
	In-transit Inventory Cost / FEU	$2,412.89	$902.45	$149.86	$394.61	$304.40	$532.09
	Cycle Inventory / FEU	$403.25	$150.82	$25.04	$65.95	$50.87	$88.93
	Safety Stock Cost / FEU	$4,748.45	$1,184.96	$98.82	$389.06	$327.48	$191.81
	Freight Rate / FEU	$1,800.00	$1,800.00	$1,800.00	$1,800.00	$1,800.00	$1,800.00
	Total Logistics Cost / FEU	$9,819.27	$4,238.26	$2,356.02	$11,289.01	$73,076.82	$6,729.88
MODEL RESULTS: SUMMARY	Logistics Cost Savings / FEU	$7,314.05	$4,886.62	$10,410.10	$2,478.77	($51,603.69)	$7,053.41
	w/ 87% rate premium	$5,748.05	$3,320.62	$8,844.10	$912.77	($53,169.69)	$5,487.41
	w/ 100% rate premium	$5,514.05	$3,086.62	$8,610.10	$678.77	($53,403.69)	$5,253.41
	Value Created / Value	1.31%	2.34%	29.98%	2.71%	(73.15%)	5.72%
	w/ 87% rate premium	1.03%	1.59%	25.47%	1.00%	(75.37%)	4.45%
	w/ 100% rate premium	0.99%	1.48%	24.79%	0.74%	(75.70%)	4.26%
LATEND DEMAND CHARACTERISTICS	Base Elasticity	-1.00	-1.00	-1.00	-1.00	-1.00	-1.00
	Own Price Elasticity	-1.24	-0.94	-1.20	-1.06	-1.84	-0.20
	Import Elasticity	-1.62	-1.62	-1.62	-1.62	-1.62	-1.62
	Applied Elasticity	-1.29	-1.19	-1.27	-1.23	-1.49	-0.94
	Stimulated demand (%)	1.32%	1.88%	32.43%	1.22%	0.00%	4.18%
	Exports (FEU)	7,842.90	111.96	134.24	56.60	14.22	86.39
	Stimulated demand (FEU)	103.73	2.11	43.53	0.69	0.00	3.61

VARIANT # 7

MODEL INPUT CONSTANTS AND PARAMETERS

3040 cu.ft./high cube FEU 2205 Lb. / tonne 59000 lb. / FEU

1992 DATA: CONTAINERIZED COMMODITIES, PORT OF NEW YORK

DESCRIPTION	Data Source	Marad - NY_E	Marad - NY_E	Marad - NY_E	Marad - NY_E	Marad - NY_E	Marad - NY_E
	Commodity Description	DATA PROCESS MACHINES; MAGN READER, ETC	SWEATERS, PULLOVERS, VESTS, ETC., KNIT OR CROCHETED	BREAD, PASTRY, CAKES, ETC, FRESH	FISH, FRESH OR CHILLED (NO FILLETS)	CUT FLOWERS, FRESH	FIRST CLASS MAIL, NEWS-PAPERS
	FEUs Shipped (annually)	7,843	112	134	57	14	86
COMMODITY	Density (lb. / Cu.Ft.)	20.0	12.0	14.0	31.0	5.0	33.0
ATTRIBUTES	Value Density ($ / lb.)	$10.82	$6.37	$0.96	$1.55	$5.46	$2.09
	Cubic Value ($ / Cu.Ft.)	$216.40	$76.44	$13.44	$48.05	$27.30	$68.97
	Tonnes per FEU	23.44	14.89	16.41	26.76	5.86	26.76
	Lbs. per FEU	51,680	32,832	36,176	59,000	12,920	59,000
	Value per FEU	$559,178	$209,140	$34,729	$91,450	$70,543	$123,310
	Annual Carrying Charge	22.5%	22.5%	22.5%	22.5%	22.5%	22.5%
	Demand Period	365	365	365	365	365	365
	Shelf Life (Days)	365	90	21	14	7	30
	Salvage Value	75%	50%	40%	25%	0%	40%
	Decay Parameter	2.0	3.0	4.0	3.0	2.5	2.0
	Stock-Out Cost (Std. Devs. for Safety Stock)	3.00	3.00	3.00	3.00	1.64	1.64
	Warehouse Cost ($ / lb. / year)	$0.00	$0.00	$0.00	$0.00	$0.00	$0.00
	Daily Sales (FEU)	21.49	0.31	0.37	0.16	0.04	0.24
	Coef. of Var. of Daily Sales	300%	200%	100%	150%	300%	100%
	Std. Dev. of Daily Sales	64.46	0.61	0.37	0.23	0.12	0.24
	Storability (FEU load Factor)	85%	90%	85%	90%	85%	90%
MODAL	Freight Rate / FEU	$1,800	$1,800	$1,800	$1,800	$1,800	$1,800
CHARACTERISTICS	Transit Time (days)	21.0	21.0	21.0	21.0	21.0	21.0
OCEAN FREIGHT	Std. Dev. of Transit Time	3.15	3.15	3.15	3.15	3.15	3.15
	Service Freq. (Shipments per Demand Period)	52	52	52	52	52	52
	Avg. Shipment Size	150.8	2.2	2.6	1.1	0.3	1.7
MODAL	Freight Rate / FEU	$12,600	$12,600	$12,600	$12,600	$12,600	$12,600
CHARACTERISTICS	Transit Time (days)	3.0	3.0	3.0	3.0	3.0	3.0
AIR FREIGHT	Std. Dev. of Transit Time	0.5	0.5	0.5	0.5	0.5	0.5
	Service Freq. (Shipments per Demand Period)	365	365	365	365	365	365
	Avg. Shipment Size	21.5	0.3	0.4	0.2	0.0	0.2
MODAL	Freight Rate / FEU	$1,800	$1,800	$1,800	$1,800	$1,800	$1,800
CHARACTERISTICS	Transit Time (days)	7.0	7.0	7.0	7.0	7.0	7.0
FASTSHIP	Std. Dev. of Transit Time	0.17	0.17	0.17	0.17	0.17	0.17
	Service Freq. (Shipments per Demand Period)	156	156	156	156	156	156
	Avg. Shipment Size	50.3	0.7	0.9	0.4	0.1	0.6
MODEL RESULTS:	Perishable Cost / FEU	$462.75	$1,328.43	$20,837.38	$68,587.50	$70,543.20	$36,253.14
OCEAN FREIGHT	Origin Inventory Cost / FEU	$1,209.76	$452.47	$75.13	$197.85	$152.62	$266.78
	Origin Warehouse Cost / FEU	$0.00	$0.00	$0.00	$0.00	$0.00	$0.00
	In-transit Inventory Cost / FEU	$7,238.67	$2,707.36	$449.57	$1,183.84	$913.20	$1,596.27
	Cycle Inventory / FEU	$1,209.76	$452.47	$75.13	$197.85	$152.62	$266.78
	Safety Stock Cost/ FEU	$8,841.10	$2,384.16	$264.35	$857.62	$609.73	$513.11
	Freight Rate / FEU	$1,800.00	$1,800.00	$1,800.00	$1,800.00	$1,800.00	$1,800.00
	Total Logistics Cost / FEU	$20,762.03	$9,124.88	$23,501.57	$72,824.66	$74,171.36	$40,696.08
MODEL RESULTS:	Perishable Cost / FEU	$9.44	$3.87	$8.68	$674.88	$8,482.29	$739.86
AIR FREIGHT	Origin Inventory Cost / FEU	$172.35	$64.46	$10.70	$28.19	$21.74	$38.01
	Origin Warehouse Cost / FEU	$0.00	$0.00	$0.00	$0.00	$0.00	$0.00
	In-transit Inventory Cost / FEU	$1,034.10	$386.77	$64.22	$169.12	$130.46	$228.04
	Cycle Inventory / FEU	$172.35	$64.46	$10.70	$28.19	$21.74	$38.01
	Safety Stock Cost / FEU	$3,145.08	$797.34	$71.81	$267.40	$216.90	$139.38
	Freight Rate / FEU	$12,600.00	$12,600.00	$12,600.00	$12,600.00	$12,600.00	$12,600.00
	Total Logistics Cost / FEU	$17,133.32	$13,916.90	$12,766.12	$13,767.77	$21,473.13	$13,783.29
MODEL RESULTS:	Perishable Cost / FEU	$51.42	$49.20	$257.25	$8,573.44	$70,543.20	$4,028.13
FASTSHIP	Origin Inventory Cost / FEU	$403.25	$150.82	$25.04	$65.95	$50.87	$88.93
	Origin Warehouse Cost / FEU	$0.00	$0.00	$0.00	$0.00	$0.00	$0.00
	In-transit Inventory Cost / FEU	$2,412.89	$902.45	$149.86	$394.61	$304.40	$532.09
	Cycle Inventory / FEU	$403.25	$150.82	$25.04	$65.95	$50.87	$88.93
	Safety Stock Cost / FEU	$4,748.45	$1,184.96	$98.82	$389.06	$327.48	$191.81
	Freight Rate / FEU	$1,800.00	$1,800.00	$1,800.00	$1,800.00	$1,800.00	$1,800.00
	Total Logistics Cost / FEU	$9,819.27	$4,238.26	$2,356.02	$11,289.01	$73,076.82	$6,729.88
MODEL RESULTS:	Logistics Cost Savings / FEU	$7,314.05	$4,886.62	$10,410.10	$2,478.77	($51,603.69)	$7,053.41
SUMMARY	w/ 85% rate premium	$5,784.05	$3,356.62	$8,880.10	$948.77	($53,133.69)	$5,523.41
	w/ 100% rate premium	$5,514.05	$3,086.62	$8,610.10	$678.77	($53,403.69)	$5,253.41
	Value Created / Value	1.31%	2.34%	29.98%	2.71%	(73.15%)	5.72%
	w/ 85% rate premium	1.03%	1.60%	25.57%	1.04%	(75.32%)	4.48%
	w/ 100% rate premium	0.99%	1.48%	24.79%	0.74%	(75.70%)	4.26%
LATEND DEMAND	Base Elasticity	-1.00	-1.00	-1.00	-1.00	-1.00	-1.00
CHARACTERISTICS	Own Price Elasticity	-1.24	-0.94	-1.20	-1.06	-1.84	-0.20
	Import Elasticity	-1.62	-1.62	-1.62	-1.62	-1.62	-1.62
	Applied Elasticity	-1.29	-1.19	-1.27	-1.23	-1.49	-0.94
	Stimulated demand (%)	1.33%	1.90%	32.56%	1.27%	0.00%	4.21%
	Exports (FEU)	7,842.90	111.96	134.24	56.60	14.22	86.39
	Stimulated demand (FEU)	104.38	2.13	43.71	0.72	0.00	3.64