APPROXIMATE TRANSMISSION NETWORK MODELS FOR USE IN ANALYSIS AND DESIGN

D. Crevier

Report #MIT-EL 73-008 June 1972

ENERGY LABORATORY

The Energy Laboratory was established by the Massachusetts Institute of Technology as a Special Laboratory of the Institute for research on the complex societal and technological problems of the supply, demand and consumption of energy. Its full-time staff assists in focusing the diverse research at the Institute to permit undertaking of long term interdisciplinary projects of considerable magnitude. For any specific program, the relative roles of the Energy Laboratory, other special laboratories, academic departments and laboratories depend upon the technologies and issues involved. Because close coupling with the normal academic teaching and research activities of the Institute is an important feature of the Energy Laboratory, its principal activities are conducted on the Institute's Cambridge Campus.

This study was done in association with the Electric Power Systems Engineering Laboratory and the Department of Civil Engineering (Ralph M. Parsons Laboratory for Water Resources and Hydrodynamics and the Civil Engineering Systems Laboratory).

Table of Contents

1. Introduction

A wide range of power system expansion planning techniques require a very large number of solutions for the real power flows in the lines for a given transmission network. A prime example is of course the design of the transmission network itself but multiple line flow solutions can also be required in generation expansion planning and in the associated reliability studies. The use of complete "A-C load flow" iteration techniques for solving the exact nonlinear equations can easily lead to prohibitive computation requirements. Therefore there is a definite need for approximate transmission line models and solution techniques.

It is the purpose of this paper to investigate and compare three approximate models and solution techniques.

1) "D-C Load Flow Model"
2) "Transshipment Model" - Linear Programming
3) "Ford-Fulkerson Model"

The models are listed in order of decreasing accuracy and increasing computational efficiency. These approximate models are not new. The value of this report lies in the comparison of their natures. We shall try to isolate some of the pitfalls that one might encounter in using those methods, and point out in what circumstances they will give meaningful results.

2. "Exact" Model

It is always possible to represent a three-phase transmission line by the following so-called π-model:

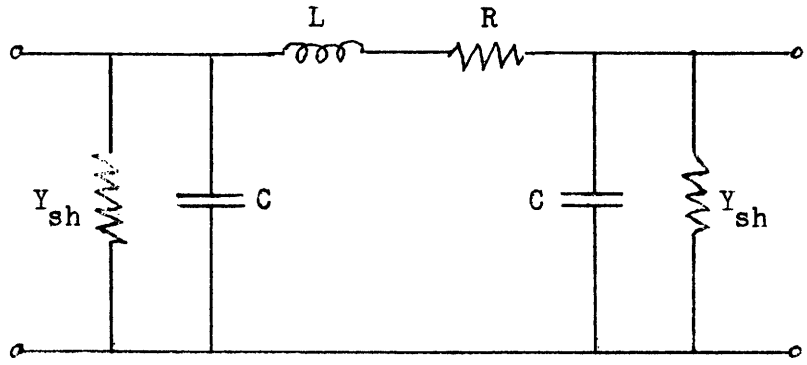

Figure 1

The inductance L represents the self-inductance of each phase in the line, and the mutual inductance between phases.

The resistance R represents the resistance of all three phases.

The shunt admittances C and Y_{sh} account for the capacitance and the shunt conductances between the three phases, and each phase and the ground.

The above model is used by engineers for detailed technical studies, especially if the line is very long (more than 200 miles). If the line is not too long, or if less than perfect accuracy is desired, the shunt elements can be neglected.

Note:

1) the shunt conductance is usually neglected, even in very detailed studies;

2) if the line is very long and if the shunt capacitance becomes too important, it is usually partially eliminated by installing shunt inductors at both ends of the line.

For these reasons, we shall consider as our "exact" model of a transmission line the following model, containing only series elements:

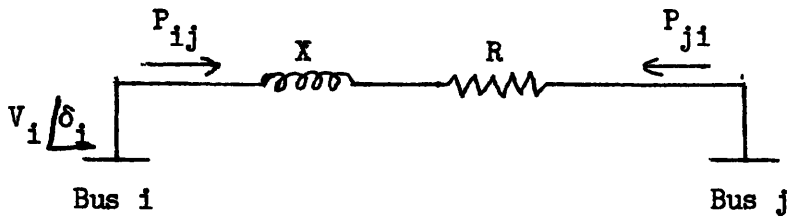

Figure 2

where $X = J_w L$.

The real power flows in a line connected between buses i and j, with bus voltages $V_i\angle\delta_i$ and $V_j\angle\delta_j$, can be computed as follows:

The complex powers $\bar{S}_{ij}$ and $\bar{S}_{ji}$† are given by the expression:

$$\bar{S}_{ij} = \bar{P}_{ij} + J\bar{Q}_{ij} = \bar{V}_i\bar{I}^* = \bar{V}_i \frac{\bar{V}_i^* - \bar{V}_j^*}{Z^*} = \frac{V_i^2 - V_iV_je^{j(\delta_i-\delta_j)}}{R - JX} \quad (1)\ ††$$

$$\bar{S}_{ji} = \frac{V_j^2 - V_iV_je^{j(\delta_j-\delta_i)}}{R - JX} \quad (2)$$

† Quantities with a superbar (¯) are complex quantities. For example

$$\bar{V}_i = V_i\angle\delta_i = V_ie^{j\delta_i}.$$

††An asterisk (*) indicates the complex conjugate of a complex quantity.

After separating real and imaginary parts in the above equations, we get:

$$P_{ij} = \frac{1}{R^2 + X^2} (RV_i^{\,2} - RV_iV_j \cos(\delta_i - \delta_j) + XV_iV_j \sin(\delta_i - \delta_j) \qquad (3)$$

$$P_{ji} = \frac{1}{R^2 + X^2} (RV_j^{\,2} - RV_iV_j \cos(\delta_i - \delta_j) - XV_iV_j \sin(\delta_i - \delta_j) \qquad (4)$$

An expression for the losses in line ij can be obtained by adding equations (3) and (4):

$$P_L = P_i + P_j = \frac{1}{R^2 + X^2} \left[R(V_i^{\,2} + V_j^{\,2}) - 2RV_iV_j \cos \delta\right] \qquad (5)$$

If all voltages are inserted in these formulas in line values and kilovolts, then all powers will come out as three-phase megawatts. If the voltages are expressed in the per unit system, the powers will be in three phase, per unit megawatts.

The reader will appreciate the fact that even for this simplified model of a transmission line, the equations describing the power flows are nonlinear, and usually not amenable to an analytic solution. Even for a small system involving only a few buses, the only method of solution of these equations is a recursive solution algorithm on a digital computer.

3. Simplified Model I (D-C Load Flow)

Equations (3) and (4) can be greatly simplified if we make the following assumptions:

a) R is small compared to X. Transmission lines are usually designed so that $R < |X|/10$. Since real power losses are related to R, utilities are interested in having small line resistances.

b) The bus voltage magnitudes V_i and V_j are almost equal. This is usually true in practice, since too large a variation in bus voltage magnitudes can make for damaged equipment, unreliable operation and angry customers. V_i is usually equal to V_j to within plus or minus 5%.

c) The difference in voltage angles $(\delta_i - \delta_j)$ is small. It is a fact that $(\delta_i - \delta_j)$ seldom exceeds 15°, mainly for stability reasons. In this range of values:

$$\sin(\delta_i - \delta_j) \simeq (\delta_i - \delta_j)$$

$$\cos(\delta_i - \delta_j) \simeq 1$$

Using these approximations we obtain for P_{ij} and P_{ji}:

$$P_{ij} \simeq \frac{V^2}{X}(\delta_i - \delta_j) \tag{6}$$

$$P_{ji} \simeq \frac{V^2}{X}(\delta_j - \delta_i) \tag{7}$$

We can obtain a similar expression for P_L by using the

approximations in equation (5); we get:

$$P_L = \frac{R}{V^2} P_{ij}^{\ 2} \tag{8}$$

If V is expressed in per-unit, and if we assume that $V_i = V_j = 1$ PU:

$$P_{ij} = \frac{1}{X_{ij}} (\delta_i - \delta_j) \tag{9}$$

$$P_{I_{ij}} = R_{ij} P_{ij}^{\ 2} \tag{10}$$

We shall from here on refer to the linearized model described by equation 9 as the simplified model I. It is often called a D-C load flow solution.

3.1 Analogy between the simplified model and a resistive network

Let us consider a resistive network where the only active elements are current sources connected to ground, as in figure 3. It is easily seen that equation (9) expresses the relationship between the node voltages and the currents in the resistors if we assume that the real power flows P_{ij} correspond to the currents I_{ij}, that the phase angles δ_i correspond to the node voltages v_i, and that the line reactances X_{ij} correspond to the resistances r_{ij}. Since the sum of the currents at a node must be zero, the intensity of the current sources I_i must be equal to the load or generation at bus i. Similarly, equation (10) can be interpreted as a correspondence between the line losses in the power system and the heat dissipation in the resistive network. Notice,

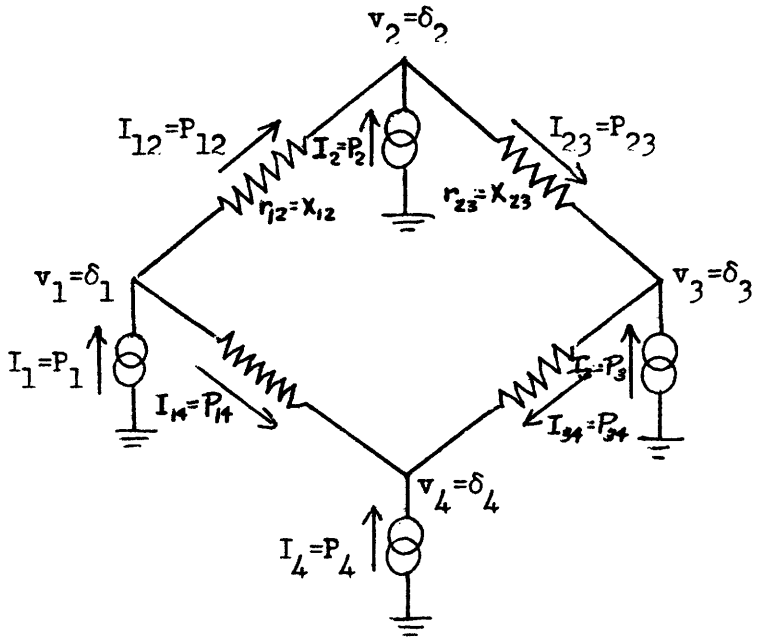

Figure 3

however, that the line losses are proportional to R_{ij}, and not X_{ij}. An analogy also exists with the voltage drop in resistor (ij) and the reactive power in line (ij). These conclusions are summarized in table I.

Table I

A Poor Man's View of Power System

A power system can be modeled by a resistive network if the following equivalences are made:

Power System	Resistive Network
Transmission line with reactance X_{ij}	Resistor X_{ij}
Generator or load of intensity P	Current source of intensity I_i P_i
Bus voltage angle δ_i	Node voltage $v_i = \delta_i$
Real power losses in line ij	Proportional to heat losses in resistor (ij)
Reactive power in line (ij)	Proportional to voltage drop in resistor (ij)

Table II			Table III	
Complete System			Line No. 16 Out of Service	
Line No.	Linear Model	Load Flow	Linear Model	Load Flow
1	79.6	80.5	107.9	111.3
2	103.9	106.9	132.2	140.9
3	127.2	124.1	197.8	195.7
4	93.5	90.7	164.0	156.2
5	15.2	16.8	60.12	56.9
6	20.4	20.2	41.4	39.4
7	26.2	26.0	50.2	48.0
8	52.65	51.4	73.7	69.9
9	51.55	52.5	107.4	107.0
10	174.9	172.6	275.6	267.6
11	108.6	106.4	224.1	210.2
12	27.45	27.8	-8.1	-16.7
13	26.45	27.0	-8.1	-15.7
14	33.35	33.4	-87.4	-85.8
15	33.35	33.6	-87.2	-85.3
16	241.5	239.7	0	0
17	252.4	250.8	11.1	10.1
18	185.8	183.8	286.4	281.5
19	267.8	265.8	26.5	24.3
20	201.15	198.4	301.8	296.1
21	-191.4	-193.3	-149.7	-152.4
22	439.8	434.9	481.6	482.2
23	273.8	233.9	279.6	277.0
24	135.8	134.0	177.6	175.6
25	84.8	84.0	126.6	125.7
Line losses: 22.5 MW			Line losses: 40.3 MW	

3.2 Matrix solution of the Simplified Model I

Let $\underline{P}_\ell$ be the vector of line flows, and $\underline{P}_b$ be the vector of bus injections. Then $\underline{P}_\ell$ can be computed from $\underline{P}_b$ as follows

$$\underline{P}_\ell = \underline{Y}_\ell \, \underline{A}_r \left[\underline{A}_r^T \, \underline{Y}_\ell \, \underline{A}_r \right]^{-1} \underline{P}_b \tag{11}$$

where: $\underline{Y}_\ell$: diagonal matrix of line admittances

$\underline{A}_r$: reduced bus incidence matrix

See reference (11) for further details.

3.3 Accuracy of Simplified Model I

Simplified model I usually gives, for the real power flows, values accurate to ± 5%. For example, a comparison of lines flows computed using a load flow and the linearized model for a part of the New England power system is given in reference (2).† The agreement between the two methods is excellent. When large errors occur, it is for lines connected to the swing bus, whose generation is adjusted by the load flow to compensate for line losses.

3.4 Uses of Simplified Model I in the literature

Simplified Model I is used often and for many purposes. Here are a few articles making use of this model:

---

†It is repeated here (tables II and III) for easier reference. The network is the same as the one used to illustrate Simplified Model II.

N. V. Awanatidis "The use of objective functions in real power
V. Rosing Dispatching." (IEEE Winter Power Meeting, 1971)
The authors discuss economic dispatching using equation (11) as a constraint in a linear program.

F. C. Schweppe "Power System Static-State estimation. Part II:
D. D. Rom Approximate model." IEEE, Vol. PAS 89, No. 1, January 1970.
The authors use Simplified Model I in discussing filtering techniques for state estimation in power systems.

J. C. Kaltenbach "Optimal corrective rescheduling for Power System
L. P. Hadju Security." IEEE PAS 90, March-April 1971.

A. Thanikachalam "Optimal rescheduling on Power for System Reli-
J. R. Tudor ability." IEEE PAS-90, Sept.-Oct. 1971.
The authors discuss the rescheduling problem using, again, equation (11) as a constraint in a linear program.

L. P. Hadju "On line monitoring of Power System Security."
D. W. Bree IEEE PAS, Feb. 1963.
A. W. Brooks

G. A. MacArthur "Transmission Limitations Computed by Superposition."
AIEE transactions, December 1961.

H. D. Limmer "Techniques and applications of Security Calculations

Applied to Dispatching Computers." PSCC Proceedings, Rome, June 1969.

D. Crevier "Steady State Contingency Evaluation of Power Systems." M.S. thesis, M.I.T., 1971.

These papers all apply Simplified Model I to the problem of contingency evaluation of line faults.

3.5 Disadvantages of Simplified Model I

For certain types of studies, Simplified Model I still requires too much computation. For example, equation (11) requires a matrix inversion. In metwork expansion studies, where it is desired to analyze the effects of a multitude of network configurations, it is extremely cumbersome to modify the inverse bus admittance matrix $\left[A_r^T Y_\ell A_r\right]^{-1}$ every time. This brings us to the next model.

4. Simplified Model 2 (Transshipment Model)

Suppose we wanted to find the current distribution in Figure 3 that minimizes the heat losses in the resistors, consistent with the current sources at the nodes. That is, we want to solve the following mathematical program:

MP I $\qquad \text{Min} \quad z = \sum P_{ij}^{2} X_{ij}$

$$\text{subject to} \quad \sum_{j} P_{ij} = P_i \qquad \text{at every node } i$$

Notice that we are deliberately not taking into account Kirchhoff's voltage law in our constraint set. Instead, we rely on the minimization of the objective function to completely specify the currents. We then verify the following interesting result:

> "The currents P_{ij} that minimize the objective function above are precisely those that we would obtain by solving for the currents using both Kirchhoff's voltage and current laws."

In other words, the natural current distribution is the one that produces the minimum amount of heat losses.

<u>Proof</u>: The mathematical program above can be written as:

$$\text{Min} \quad z = \underline{P}_{\ell}^{T} \, \underline{Y}_{\ell}^{-1} \, \underline{P}_{\ell} \tag{12}$$

$$\text{subject to} \quad \underline{A}_{r}^{T} \, \underline{P}_{\ell} = \underline{P}_{b_o} \tag{13}$$

We must prove that:

1) $\underline{P}_{\ell_o} = \underline{Y}_{\ell} \, \underline{A}_{r} \left[\underline{A}_{r}^{T} \, \underline{Y}_{\ell} \, \underline{A}_{r} \right]^{-1} \underline{P}_{b_o}$ is a solution of (13).

2) For any $\underline{P}_{\ell_1}$, such that (13) holds, $\underline{P}_{\ell_o}^T \underline{Y}_\ell^{-1} \underline{P}_{\ell_o} \leq \underline{P}_{\ell_1}^T \underline{Y}_\ell^{-1} \underline{P}_{\ell_1}$.

We first prove (1):

Clearly $\underline{A}_r^T \underline{P}_{\ell_o} = \underline{A}_r^T \underline{Y}_\ell \underline{A}_r \left[\underline{A}_r^T \underline{Y}_\ell \underline{A}_r\right]^{-1} \underline{P}_{b_o} = \underline{P}_{b_o}$.

So $\underline{P}_{\ell_o}$ is a solution of (13).

To prove (2):

Lemma: Let $\underline{P}_{b_1} = \left[\underline{A}_r^T \underline{Y}_\ell \underline{A}_r\right]^{-1} \underline{P}_{b_o}$.

Then $\underline{P}_{\ell_o} = \underline{Y}_\ell \underline{A}_r \left[\underline{A}_r^T \underline{Y}_\ell \underline{A}_r\right]^{-1} \underline{P}_{b_o} = \underline{Y}_\ell \underline{A}_r \underline{P}_{b_1}$.

So $\underline{Y}_\ell^{-1} \underline{P}_{\ell_o} = \underline{A}_r \underline{P}_{b_1}$.

Proof of (2): Consider now any other solution $\underline{P}_{\ell_1}$ such that

$$\underline{A}_r^T \underline{P}_{\ell_1} = \underline{A}_r^T \underline{P}_{\ell_o} = \underline{P}_{b_o} .$$

Then $\underline{P}_{b_1}^T \underline{A}_r^T \underline{P}_{\ell_o} = (\underline{A}_r \underline{P}_{b_1})^T \underline{P}_{\ell_o} = (\underline{Y}_\ell^{-1} \underline{P}_{\ell_o})^T \underline{P}_{\ell_o}^T \underline{Y}_\ell^{-1} \underline{P}_{\ell_o}$.

Also $\underline{P}_{b_1}^T \underline{A}_r^T \underline{P}_{\ell_o} = \underline{P}_{b_1}^T (\underline{A}_r^T \underline{P}_{\ell_o}) = \underline{P}_{b_1}^T (\underline{A}_r^T \underline{P}_{\ell_1}) = (\underline{P}_{b_1}^T \underline{A}_r^T) P_{\ell_1}$

$$= (\underline{P}_{\ell_o}^T \underline{Y}_\ell^{-1}) \underline{P}_{\ell_1} .$$

We therefore have $\underline{P}_{\ell_o}^T \underline{Y}_\ell^{-1} \underline{P}_{\ell_1} = \underline{P}_{\ell_o}^T \underline{Y}_\ell^{-1} \underline{P}_{\ell_o}$

which implies $(\underline{P}_{\ell_o}^T - \underline{P}_{\ell_1}^T) \underline{Y}_\ell^{-1} \underline{P}_{\ell_o} = 0$.

Completing the square we get:

$$2(\underline{P}_{\ell_o}^T - \underline{P}_{\ell_1}^T)\underline{Y}_\ell^{-1}\underline{P}_{\ell_o} = 2\underline{P}_{\ell_o}^T\underline{Y}_\ell^{-1}\underline{P}_{\ell_o} - 2\underline{P}_{\ell_1}^T\underline{Y}_\ell^{-1}\underline{P}_{\ell_o} + \underline{P}_{\ell_1}^T\underline{Y}_\ell^{-1}\underline{P}_{\ell_1} - \underline{P}_{\ell_1}^T\underline{Y}_\ell^{-1}\underline{P}_{\ell_1} = 0$$

$$= \underline{P}_{\ell_o}^T\underline{Y}_\ell^{-1}\underline{P}_{\ell_o} + (\underline{P}_{\ell_o}^T\underline{Y}_\ell^{-1}\underline{P}_{\ell_o} - 2\underline{P}_{\ell_1}^T\underline{Y}_\ell^{-1}\underline{P}_{\ell_o} + \underline{P}_{\ell_1}^T\underline{Y}_\ell^{-1}\underline{P}_{\ell_1})$$
$$- \underline{P}_{\ell_1}^T\underline{Y}_\ell^{-1}\underline{P}_{\ell_1} = 0$$

$$= \underline{P}_{\ell_o}^T\underline{Y}_\ell^{-1}\underline{P}_{\ell_o} + (\underline{P}_{\ell_o}^T - \underline{P}_{\ell_1})^T\,\underline{Y}_\ell^{-1}(\underline{P}_{\ell_o} - \underline{P}_{\ell_1})$$
$$- \underline{P}_{\ell_1}^T\underline{Y}_\ell^{-1}\underline{P}_{\ell_1} = 0$$

$$\therefore\ \underline{P}_{\ell_o}^T\underline{Y}_\ell^{-1}\underline{P}_{\ell_o} - \underline{P}_{\ell_1}^T\underline{Y}_\ell^{-1}\underline{P}_{\ell_1} = -(\underline{P}_{\ell_o}^T - \underline{P}_{\ell_1}^T)\,\underline{Y}_\ell^{-1}(\underline{P}_{\ell_o} - \underline{P}_{\ell_1}) \leq 0$$

since $\underline{Y}_\ell^{-1}$ is positive definite. Q.E.D.

Let us now consider the following mathematical program:

MP 2: $$\text{Min } z = \sum X_{ij}|P_{ij}|$$

subject to $\sum_j P_{ij} = P_i$ at every node i.

This program is identical to the previous one except that we have replaced the quadratic cost function by an absolute value cost function, as illustrated in Figure 4.

Intuitively we should expect some correlation between the solutions to MPI and MP2 because of the similarity of the cost functions. MP2 is known in operations research as the <u>transshipment problem</u>, because it can also express the problem of minimizing the transportation cost of goods that have to be shipped across a given transportation network. It is, in fact, pretty much the problem we would have to solve if we

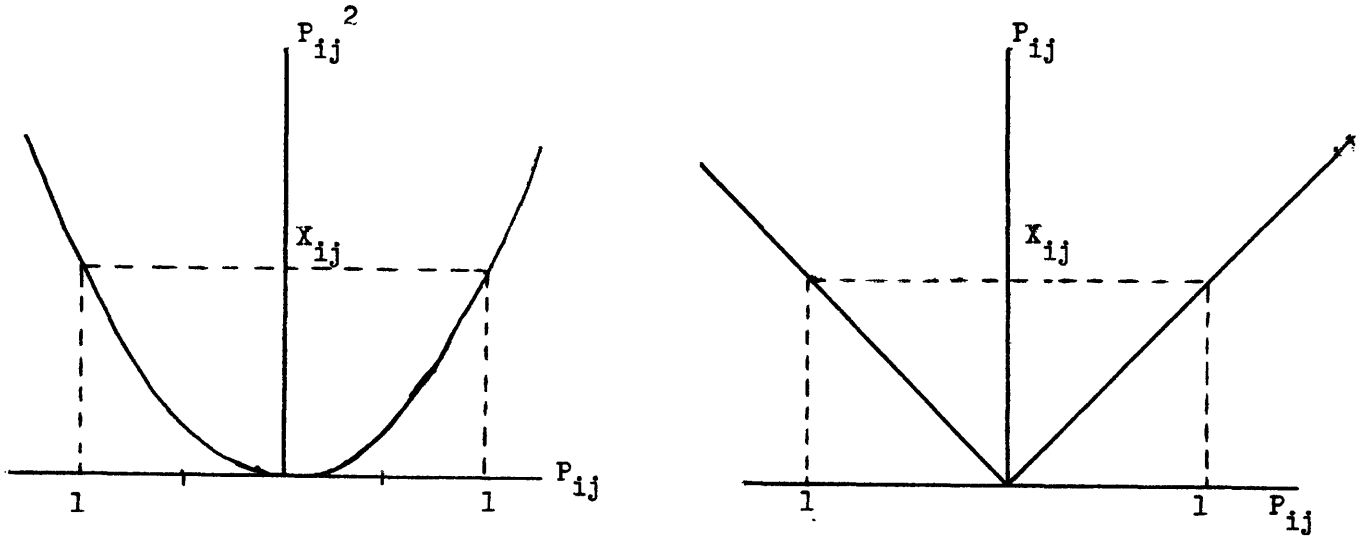

Quadratic cost function

Absolute value cost function

Figure 4

wanted to study the transportation cost of energy in terms of fuel (coal, gas, etc...) rather than electricity.

4.1 Peculiarities of the transshipment problem and solution

MP2 is not an ordinary linear program. Actually it is one of the simplest cases in the large class of transportation problems. The fact that the sum of the power flows at all nodes must be zero gives the problem a particular structure that makes it amenable to a very simple and efficient solution. We give here a description of the algorithm that is by no means intended to be a rigorous mathematical description. For a better treatment, the reader is referred to Danzig (17) or Wagner (18).

Consider the network in Figure 6. Flows of 1, 2, and 3 units are injected into buses 1, 2, and 3 respectively. A flow of 1+2+3 = 6 units

from \ to	1	2	3	4	Supply
1	C_{11} P_{12}	C_{12} P_{12}	C_{13} P_{13}	C_{14} P_{14}	1+6=7
2	C_{21} P_{21}	C_{22} P_{22}	C_{23} P_{23}	C_{24} P_{24}	2+6=8
3	C_{31} P_{31}	C_{32} P_{32}	C_{33} P_{33}	C_{34} P_{34}	3+6=9
4	C_{41} P_{41}	C_{42} P_{42}	C_{43} P_{43}	C_{44} P_{44}	-6+6=0
Demand	6	6	6	6	

Figure 5

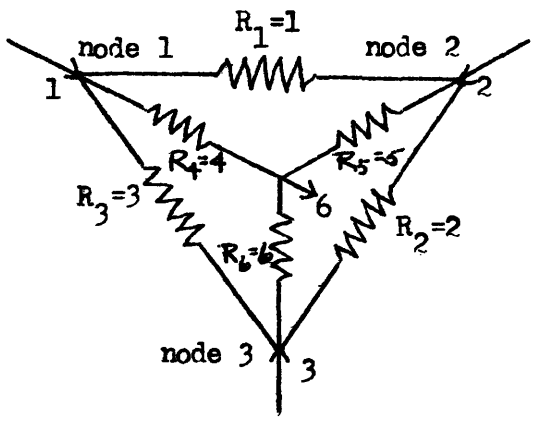

Figure 6

is coming out of node 4. Suppose we want to find the flow distribution in the lines that will minimize $\sum_i R_{ij}|P_{ij}|$. The problem can be put in the form of a tableau (see Figure 5).

A row and a column are assigned to each node. The C_{ij} 's are the costs of sending one unit of flow from i to j. In this example, the C matrix is full because every node of the graph is connected to every

other by one line. In most cases this is not so, and the elements of the tableau corresponding to non-existent lines are left blank. The P_{ij} 's are the line flows we are seeking to determine. The row and column totals $\left(\sum_i P_{ij} \text{ and } \sum_j P_{ij}\right)$ must be respectively equal to the supply and demand at the corresponding nodes plus a constant preventing the flows from becoming negative. "Self-flows", as P_{11}, P_{22}, are fictitious.

4.2 Analytical formulation of the problem

The above tableau is equivalent to the following linear program:

$$(1) \quad \text{Minimize} \sum_{i=1}^{m} \sum_{j=1}^{m} c_{ij} P_{ij} \qquad \text{(m number of nodes)}$$

subject to:

$$(2) \quad \sum_{j=1}^{m} P_{ij} = S_i \quad \text{for } i \quad 1,2,\ldots m \quad \text{(supply)}$$

$$(3) \quad \sum_{i=1}^{m} P_{ij} = D_j \quad \text{for } j \quad 1,2,\ldots m \quad \text{(demand)}$$

$$(4) \quad P_{ij} \geq 0 \qquad \text{for all } i \text{ and } j$$

$$(5) \quad \sum_{i=1}^{m} S_j = \sum_{j=1}^{m} D_j \qquad \text{(total supply = total demand).}$$

It can be shown that one of the 2m constraint equations (1) and (2) is redundant. Any solution of the program will therefore contain only 2m-1 nonzero P_{ij} 's. (It is a general property of linear programs that the optimal solution, or any intermediate solution in the computation thereof, contain as many nonzero variables as there are restrictions, at most.)

Algorithm

Step 1: Start with a basic feasible solution; i.e. a set of 2m-1 nonzero P_{ij} 's satisfying the row and column summation constraints.

Step 2: Check whether the solution is improved by introducing a nonbasic variable (one whose value is zero in the current solution). If so, go to step 3. Otherwise, stop.

Step 3: Determine which variable leaves the basis when the variable selected in step 2 enters.

Step 4: Adjust the flows of the other basic lines. Return to step 2.

Example

Step 1: Suppose we start with the following basic feasible solution in the above problem (left-hand tableau).

from \ to	1	2	3	4	
1	0 / 6	1	3	4 / 1	7
2	1	0 / 6	2 / 2	5	8
3	3	2	0 / 4	6 / 5	9
4	4	5	6	0 / 0	0
	6	6	6	6	

from \ to	1	2	3	4	
1	0 / 0	1 / -5	3 / -5	4 / 0	4
2	1 / 3	0 / 0	2 / 0	5 / 3	8
3	3 / -1	2 / -4	0 / 0	6 / 0	6
4	4 / -8	5 / -13	6 / -12	0 / 0	0
	-4	-8	-6	0	

Figure 7

Step 2: The right-hand tableau contains what could be called the negative values of the partial derivatives of the objective function with respect to nonbasic (zero) flows. In this case it can be seen that introducing one unit of either P_{21} or P_{24} would improve the objective function by three units. Any other modification would produce an increase in the objective function. The right-hand tableau can be deduced easily from the left one.

Step 3 + 4: We would introduce, say P_{21} into the basic solution, and modify the other flows so as to keep row and column totals constant. We would in the process eliminate P_{23}. Returning to step 2, the right-hand tableau would show this new solution to be optimal.

Remarks:

1) The solution to this problem can be reached very easily by hand in a few minutes. The only arithmetic operations performed are additions and subtractions. It is the author's experience that much larger problems (say 20 nodes) can also be solved by hand rather easily. Solving Kirchhoff's equations for a network of this size is a horrendous task, if the inverse bus admittance matrix is not readily available.

2) For these reasons, it is felt by the author that the saving in computer time realized by using the transshipment problem rather than Kirchhoff's laws can be of one or two orders of magnitudes. This is especially true when the problems have to be solved from scratch (i.e. when the admittance matrix B

has to be inverted), or when it is desired to study the effects of variations in network geometry (in which case the B^{-1} matrix must undergo onerous modifications. See (9).

4.3 Accuracy of the transshipment algorithm

Here is a comparison of the solutions to the network of Figure 5, as obtained by the algorithm, and by using Kirchhoff's law:

Line	Flow, TSSP	Flow, Kirchhoff
1	2	0.648
2	0	0.593
3	0	0.611
4	3	2.30
5	0	1.968
6	3	1.84

Table II

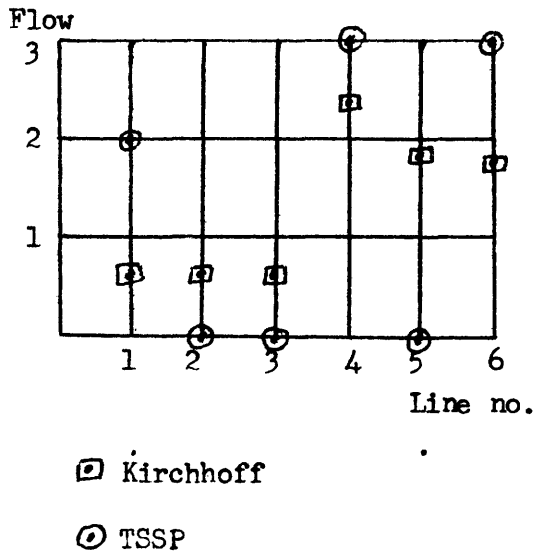

Figure 8

Furthermore, here are similar results bearing on an 18 bus, 25 line system which is a part of the New England power system. The "exact" power flows are the results of a load flow study. Figures 8 and 9 display graphically the results of tables 2 and 3. In figure 9, the lines have been ordered according to the intensity of the flows, so as to render the correlation between the two curves more apparent.

Table

System Data

Bus No.	Load (MW)	Generation (MW)	Line No.	Admittance (p.u.)
1	(SWING BUS)		1	5.77
2	23.3	0.0	2	13.80
3	0.0	508.0	3	9.43
4	32.8	0.0	4	28.40
5	0.0	0.0	5	111.20
6	29.4	0.0	6	17.35
7	30.3	0.0	7	18.05
8	42.5	0.0	8	188.80
9	171.0	0.0	9	18.12
10	211.8	40.0	10	27.10
11	9.9	0.0	11	86.30
12	14.4	0.0	12	8.29
13	14.4	0.0	13	8.00
14	9.9	0.0	14	12.90
15	0.0	632.0	15	12.90
16	200.0	0.0	16	65.00
17	100.0	0.0	17	62.90
18	50.0	0.0	18	63.30
			19	34.70
			20	34.70
			21	72.40
			22	52.60
			23	60.50
			24	28.50
			25	12.22

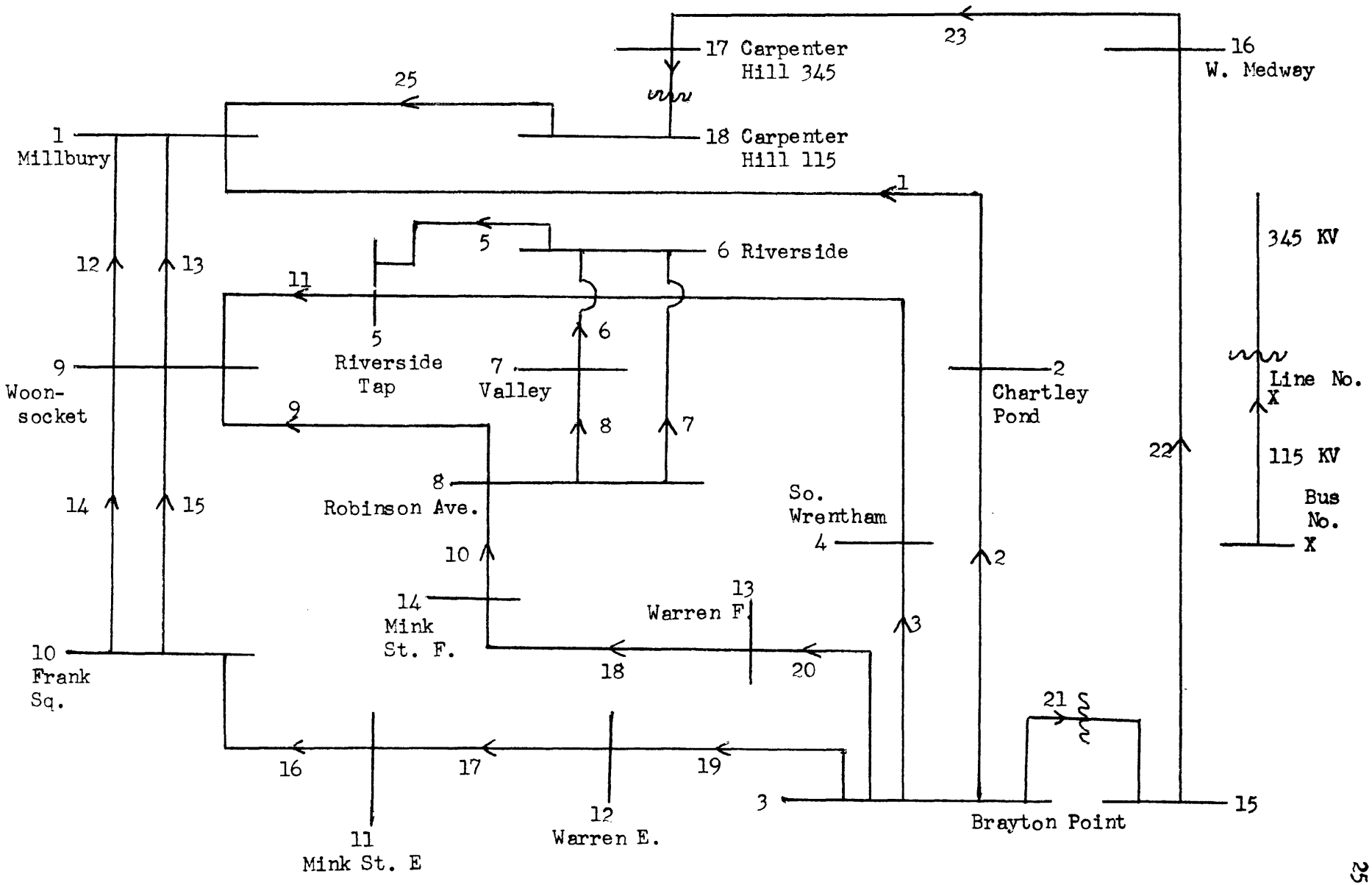
17 Carpenter Hill 345
16 W. Medway
18 Carpenter Hill 115
1 Millbury
6 Riverside
5 Riverside Tap
7 Valley
9 Woon-socket
2 Chartley Pond
8 Robinson Ave.
So. Wrentham 4
14 Mink St. F.
13 Warren F.
10 Frank Sq.
11 Mink St. E
12 Warren E.
3 Brayton Point
15
345 KV
Line No. X
115 KV
Bus No. X

Line	Flow,MVA, TSSP	Flow,MVA, Load Flow	Line	Flow,MVA, TSSP	Flow,MVA, Load Flow
1	0	80.5	14,15	204.4	67.0
2	24.3	106.9	16	379.2	239.7
3	33.8	124.1	17	390.1	250.8
4	0	90.7	18	87.6	183.8
5	31.4	16.8	19	405.5	265.8
6	0	20.2	20	103.0	198.4
7	0	26.2	21	58.6	193.3
8	32.3	51.4	22	573.4	434.9
9	0	52.5	23	371.4	233.9
10	76.8	172.6	24	269.4	134.0
11	31.4	106.4	25	218.4	84.0
12,13	0	54.8			

Table 3

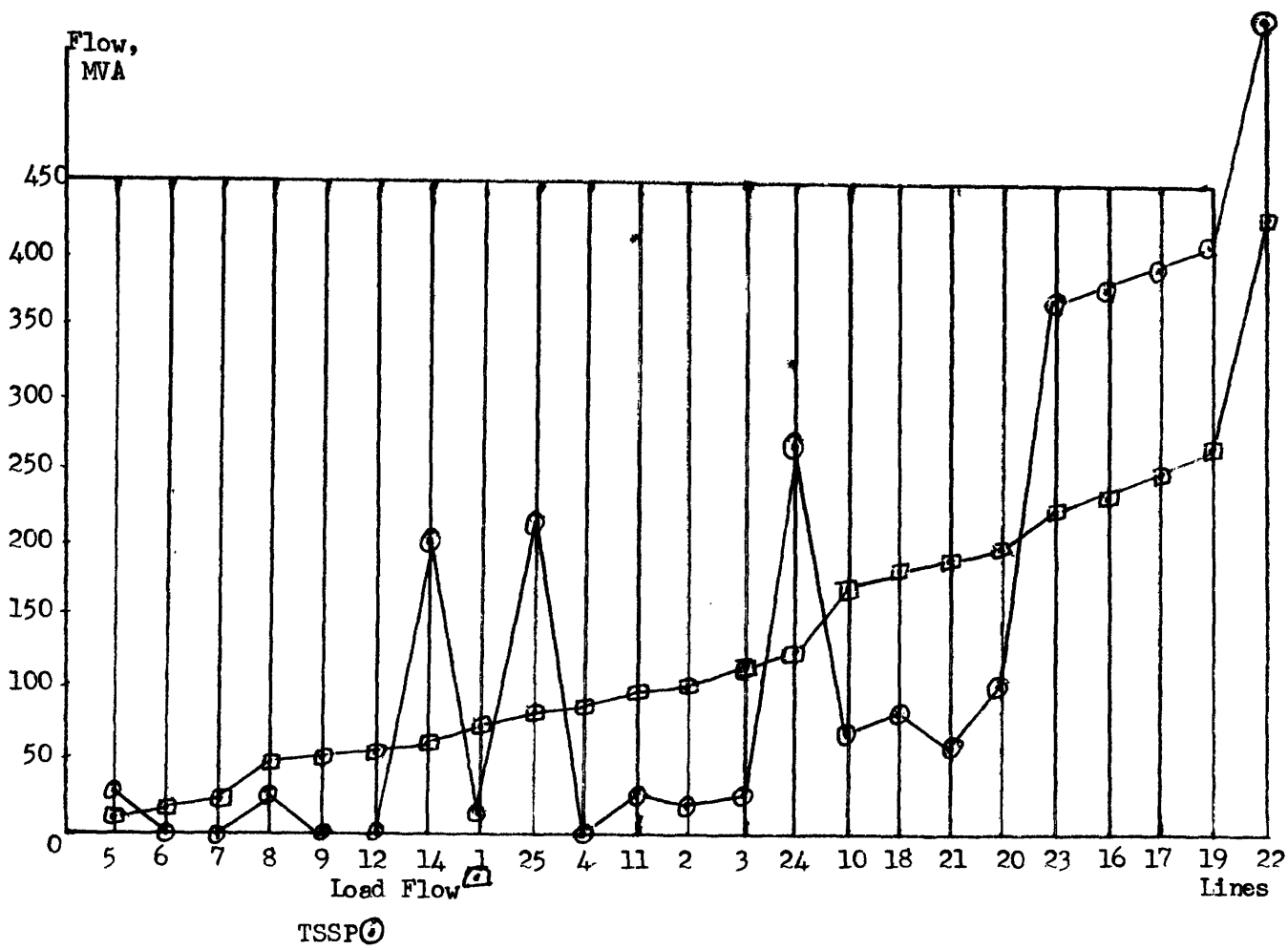

Figure 9

It can be readily ascertained from these graphs that there is indeed a correlation between the results of the transshipment algorithm and the load flow or Kirchhoff's laws. The reader may have observed, though, that in general the small values of flows, computed by the transshipment algorithm are too small, and the large values are too large. For example, all transshipment flow values above the average value of the flows in Figs. 8 and 9 are above the load flow curve. All transshipment flow values below the average value of the flow are below the load flow curve, except one. This fact can be explained as follows:

a) Remember: the transshipment curves in Figs. 8 and 9 are the solution to MP1. The load flow and Kirchhoff's laws curves are associated with MP2. Both objective functions penalize flows in high impedance lines. However the quadratic cost function in MP1 also penalizes large values of flow. MP2 does not. In MP2, the flow will tend to concentrate more in low impedance lines, than in MP1.

b) Since more flow circulates in low impedance lines in MP2, more of the load is met through these lines and less power is left to be carried by the high impedance lines. Actually, it can be proved that the optimal solution to MP2 will assign a flow of value zero to a number of lines equal to the number of lines in the network minus the number of buses; the lines carrying a flow are seen to form a tree in the network (except in degenerate cases).

4.4 Smoothing out procedure

Based on these observations, Figs. 10 and 11 have been drawn, using the following Smoothing out procedure. If a flow computed by the TSSP algorithm is smaller than the average values of all flows computed in this fashion, one half of this average value was added to it. Otherwise one half of the average value was subtracted from it. It can be seen that the corrected curves follow much better the "exact" curves. In the case of Fig. 11, the average error is 35 MVA, or 20% of the average value of the flows.

Remarks:

1) The flows obtained from the transshipment algorithm obey Kirchhoff's node law. The corrected flows do not.

2) We do not consider here the direction of flow. In a few instances, for small flows, the TSSP algorithm gives flows in the wrong direction. Furthermore, we have no way of assuming the direction in which to correct the flows to which the value zero was assigned by the algorithm. However, if the results of the algorithm are used to compute losses or to detect overloads, the direction of the flows is unimportant.

3) Even though the magnitude of the errors is small in Fig. 11, the percentage error can be exceedingly large for small flows. This could perhaps be corrected by using a better smoothing procedure: for example we could try to add less to the small flows and subtract more from the large ones. Extensive statistical studies would be needed to establish the optimal smoothing

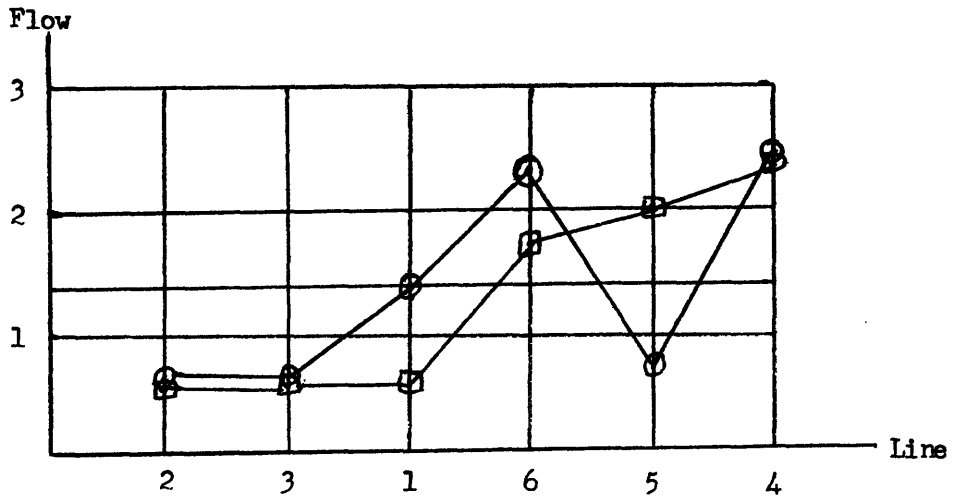

Figure 10

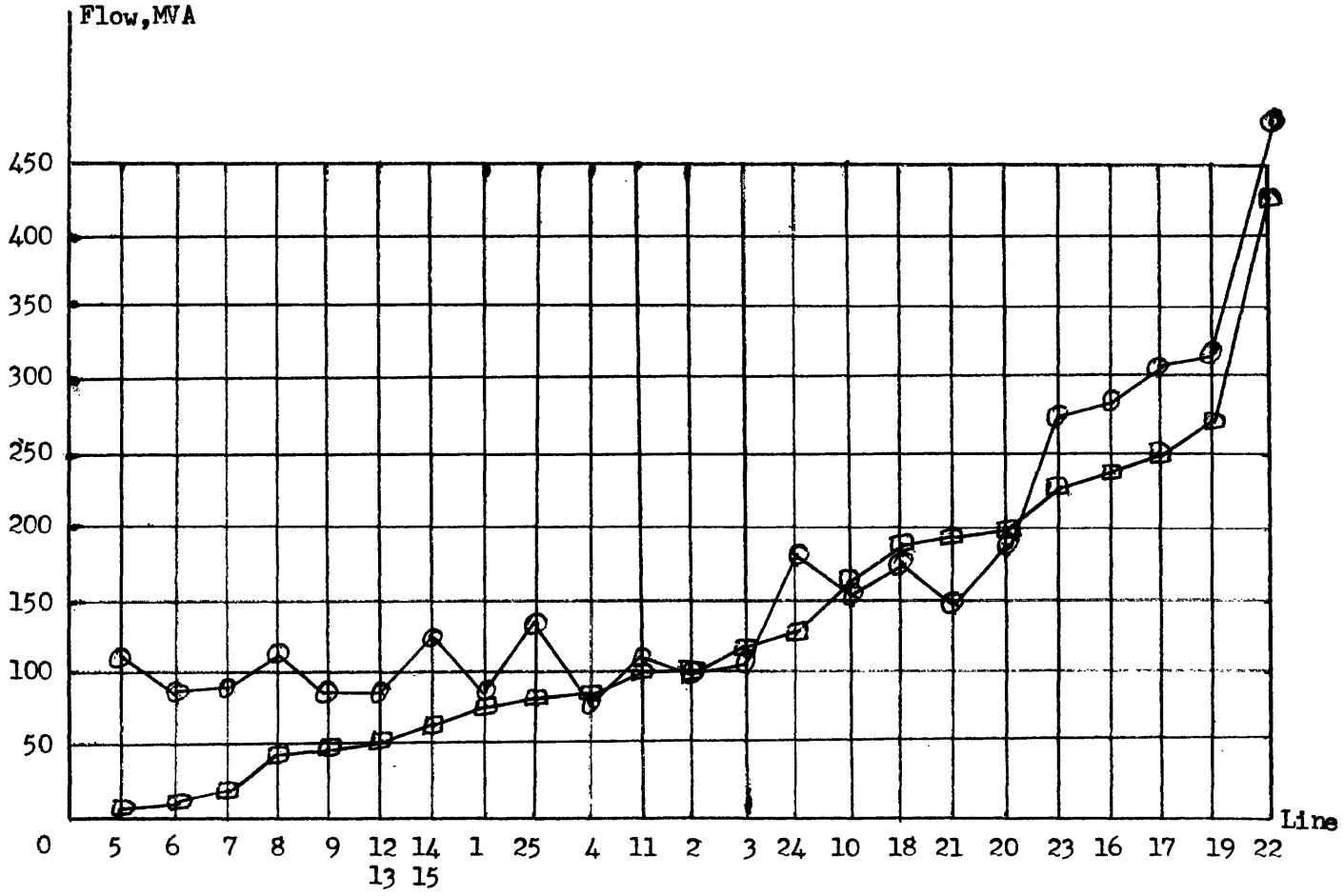

Figure 11

procedure. In any case, errors on small flows are not too important since:

a) They are on the safe side: the indicated flows are larger than the actual ones.

b) Even though larger than the actual ones, the indicated flows are still comparatively small. They may not be larger than the overload limits of the corresponding lines.

4.5 Computing Line Losses

If line losses are computed using the results of the non-smoothed transshipment problem and equation (10) which can be written as:

$$P_L = \sum_K P_{L_K} = \sum_K R_K P_K^2 \tag{14}$$

it can be expected that the computed losses will be much too large; this is due to the fact that the losses depend upon the square of the line flows. Small line flows contribute therefore proportionally less to losses than large flows, and the large flows are too large in the transshipment model solution. If the smoothed out solution is used this effect disappears and the estimated losses should be pretty close to reality.

4.6 Uses of the transshipment algorithm in the literature

The transshipment model of a power system is mostly used for planning purposes. See for example (8) Marks Jirka, (7) Platts, Sigley, Garver, (6) Garver. The following justification for using the trans-

shipment model is given in Marks, Jirka:

> "...Although there certainly ... exists a combination of fixed and variable costs with economies of scale involved, a linear representation with a constant price of transportation per unit of commodity transported is reasonably valid in many cases. This is also applicable for electric power transmission, where transmission cost are largely amortized fixed charge costs plus additional costs of maintenance and power losses, all of which do not exhibit strong economies of scale."

We note that planning studies take into account more than power losses: line construction and maintenance costs are also considered. It is the author's opinion that, if the flows are not smoothed out, this approach can be misleading for the following reasons:

1) In the unsmoothed solution, no power will flow in a certain number of lines, and these lines will make no contributions to the linear objective function ($\sum_K R_K P_K$). However amortization and maintenance costs are still associated with these lines, and the linear objective function is not realistic.
2) Power losses are quadratic, not linear. Once more the linear objective function is not realistic.

The conclusion to draw is that, even if a transshipment-type algorithm can give a pretty accurate idea of the line flows for a particular network configuration, it does not follow that the value of

the optimal linear cost function associated with this configuration has any relation to the cost of building and operating this configuration.

A more accurate cost can be obtained by using the smoothed solution and computing the value of a two component cost function, as follows:

a) A quadratic component associated with line losses,

b) A linear component associated with maintenance and amortization.

If a choice is to be made between several configurations, it should be based upon the value of the two-component cost function, rather than the value of the cost function used to carry out the minimization.

Another important point: if the flows computed by the TSSP algorithm are to have any relation with reality, the parameters of the objective function must be associated with the impedances of the lines, and not with the cost of building the lines, as in most economic studies. For a given voltage level, a low impedance line will cost <u>more</u> than a high impedance line.

5. Simplified Model 3 (Ford-Fulkerson Model)

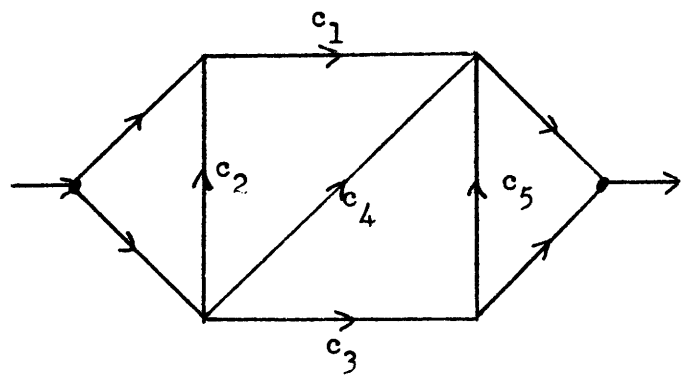

c_i: capability of line i

Figure 12

This model is an extremely simplified version of the problem. Only line capabilities are considered. No transmission cost or line admittances are taken into account. Basically, the aim of a Ford-Fulkerson study of a network is as follows: for a given load-generation configuration, see if there exists a solution to the transshipment problem (the capabilities of the lines could be too small for a solution to exist).

If such a solution exists, the algorithm will provide a feasible solution, which can be used as a starting solution by the transshipment algorithm.

If no solution exists, the Ford-Fulkerson algorithm can discover the "bottleneck": it can be shown that the maximum amount of power that can flow from generation to load is equal to the capacity of the "minimal cut" from generation to load. (Ford-Fulkerson, "Flows in

Networks"). This minimal cut is a set of lines, and if the capability of these lines is increased, the capability of the whole network is increased.

Note: Obviously, if there exists no solution to the Ford-Fulkerson algorithm, it is impossible to meet the load without overloading a line. The reciprocal is not true: the existence of a solution to the Ford-Fulkerson algorithm does not imply that a load-flow solution of the same problem would not result in a line overload. This is so because the load-flow solution has to meet more constraints (e.g. Kirchhoff's voltage law) than the Ford-Fulkerson solution.

5.1 Advantages and uses of the Ford-Fulkerson algorithm

The algorithm has the advantage of being computationally very fast and efficient, even much more so than the transshipment algorithm. See (16) for more details. It is mostly used in the first stages of network design, for example to test a proposed design against line outages, varying load configurations, etc....

Studies using this algorithm were done in 1968 by Electricité de France to decide upon important additions to be made to the French power grid.

5.2 Computing line losses

Line losses can be computed approximately using equation (10), repeated here for easy reference:

$$P_{L_{ij}} = R_{ij} P_{ij}^{2} \tag{10}$$

R_{ij} represents the resistance in a line going from i to j

P_{ij} is the real power flow in this line computed by any of the previous algorithms.

This formula gives very accurate results (± 5%) for flows computed with Simplified Model 1. See (9) for example.

Judging by the accuracy of the flow values, an accuracy of 10 to 20% should be expected with Simplified Model II on the sum of the losses in all lines, if the smoothing procedure is used.

It is the author's opinion that formula (1) should be used with great caution with flows computed by the Ford-Fulkerson algorithm, since nothing indicates that these flows have anything to do with the physical flows that would be observed.

6. Conclusion

We have discussed different models of power systems, and simplified algorithms for computing line flows and losses. As could be expected the accuracy of the results decreases with the simplifications involved and the rapidity of the algorithms. Generally speaking, the Ford-Fulkerson algorithm can give a rough idea of the capabilities of a network, by detecting certain overloads. If the objective function is properly chosen, the result of the transshipment algorithm will approximate the actual electrical flows that would be observed in the network. The accuracy will be increased if a smoothing out procedure is used. Simplified Model I gives very accurate results, and quantities such as reactive power flows can be deduced from the results.

It is the author's belief that, if used knowledgeably, the transshipment and Ford-Fulkerson algorithms can result in considerable savings in computer time for studies where accuracy is not a primal concern.

Bibliography

Papers

(1) Arvanitidis, N. V., Rosing, J., "The use of objective functions in real power dispatching." IEEE Winter Power Meeting, New York, Jan. 31 - Feb. 5, 1971.

(2) Baleriaux, H., et al., "Optimal investment policy for a growing electrical network by a sequential decision method." CIGRE - International Conference on Large High Tension Electric Systems - 1970 Session.

(3) Auge, J. et al., "Probabilistic study of a transmission system interconnection." CIGRE - International Conference on Large High Tension Electric Systems - 1970 Session.

(4) Henault, P. et al., "Power System Long-Term Planning in the Presence of Uncertainty." IEEE, Pas-89, Jan. 1970.

(5) Kaltenback, J. C. et al., "A Mathematical Optimization Technique for the Expansion of Electric Power Transmission Systems." IEEE, Pas-98, Jan. 1970.

(6) Garver, L. L., "Transmission Network Estimation Using Linear Programming." IEEE, Pas-89, Sept. - Oct. 1970.

(7) Platts, J. E. et al, "A Method for Horizon-Year Transmission Planning." IEEE Winter Power Meeting, New York, Jan. 30 - Feb. 4, 1972.

(8) Mark, D. H. and Jirka, G. H., "Environmental Screening Model for the Location of Power Generating Facilities." Presented at the Thirty-Ninth National Meeting, Operations Research Society of America, Dallas, Texas, May 7, 1971.

(9) Boughman, M. and Schweppe, F. C., "Contingency evaluation: real flows from a linear model." M.I.T. E.E. Dept., unpublished.

(10) Schweppe, F. C., Rom, D. B., "Power System Static-State Estimation, Part II, Approximate Model." IEEE, PAS-89, Jan. 1970.

(11) Crevier, D., "Steady State Contingency Evaluation of Power Systems." M.I.T., E.E. Department, M.S. Thesis, Nov. 1971.

(12) Kaltenbach, J. C., Hadju, L. P., "Optimal Rescheduling on Power for Systems Security." IEEE, PAS-90, March 1971.

(13) Thanikacnalam, A., Tudor, J. R., "Optimal corrective rescheduling for Power System Security." IEEE, PAS-90, March - April 1971.

(14) Hadju, L. P. et al., "On line monitoring of Power System Security." IEEE, PAS, Feb. 1963.

(15) Limmer, H. D., "Techniques and applications of Security Calculations applied to Dispatching Computers." PSCC, Proceedings, Rome, June 1969.

Books

(16) Ford and Fulkerson, "Flows in Networks." Princeton University Press, Princeton, N. J., 1962.

(17) Dantzig, G. B., "Linear Programming and Extensions." Princeton University Press, Princeton, N. J., 1963.

(18) Wagner, H. M., "Principles of Operations Research." Prentice-Hall, 1969.