Production System Design Methodology with Emphasis on Sub-system and Equipment Design

by

Mohammad Ali

BACHELOR OF SCIENCE IN ENGINEERING
MECHANICAL ENGINEERING AND APPLIED MECHANICS
UNIVERSITY OF PENNSYLVANIA, 1995

SUBMITTED TO THE DEPARTMENT OF MECHANICAL ENGINEERING IN PARTIAL FULFILLMENT OF THE REQUIREMENTS FOR THE DEGREE OF

MASTER OF SCIENCE IN MECHANICAL ENGINEERING
AT THE
MASSACHUSETTS INSTITUTE OF TECHNOLOGY

JUNE 1997

Signature of Author: _____
Department of Mechanical Engineering
May 9, 1997

Certified by: _____
David S. Cochran
Assistant Professor of Mechanical Engineering
Thesis Supervisor

Accepted by: _____
Ain A. Sonin
Chairman, Department Graduate Committee

Production System Design Methodology with Emphasis on Sub-system and Equipment Design

by

Mohammad Ali

Submitted to the Department of Mechanical Engineering on May 9, 1997
in Partial Fulfillment of the Requirements for the Degree of
Master of Science in Mechanical Engineering

ABSTRACT

This thesis presents a methodology to design Production Systems with emphasis on Sub-system and Equipment design. The methodology developed in this thesis starts with the customer demand for a product and ends with the functional requirements (specifications) for the equipment needed to manufacture the product. The goal of this methodology is to design a Production System that is flexible and does not have the wastes of production. A set of design principles (rules) are developed in this thesis that will help achieve this goal. Also step by step guidelines are presented at all the stages of the Production System design process that will help the user make important decisions. The methodology starts by breaking the Production System into a set of Sub-systems and then designing each of the identified Sub-systems in a manner such that they have the desired flexibility and are efficient for the desired production volume distribution.

Thesis Supervisor: David S. Cochran
Title: Assistant Professor, Department of Mechanical Engineering.

ACKNOWLEDGEMENTS

I would like to thank all the people who made my time at MIT a rewarding and a learning experience. I am sincerely grateful to my advisor, Professor David S. Cochran for giving me a tremendous manufacturing industry exposure during my stay at MIT. His guidance, understanding and patience are deeply appreciated.

I would also like to thank the Robert Bosch Corporation in general and the Bosch Charleston Plant in particular for providing me the opportunity and the support necessary to carry out my graduate research. I deeply appreciate the support given by Mr. Peter Marks, Mr. Paul H. Breves, Mr. Mark L. Goodman, Mr. Jerry Smith and Mr. Bob Johnson. I am sincerely grateful to Mr. Wolfgang A. Hasper for his constant encouragement, support and rich technical discussions related to Production System design. From him I learned the importance of asking the right questions. I also enjoyed the company of brilliant engineers like Tom Beckmann, Klaus Walcher, Dan Dorneanu, Heinz Geist, Werner Wunsche, Craig Whitlow, Thomas Day, Aaron Styles, Wendy Thomas, Udo Willmes and Karl-Heinz Brand during my stay at the Bosch Charleston Plant.

I really enjoyed the company of my colleagues in the Center for Production System Design at MIT. Their input and feedback have helped me a lot in accomplishing this work.

Lastly I am grateful to my friends at MIT: Fouzi Al-Essa, Gassan Al-Kibsi, Ammar Al-Nahwi, Jalal Khan, Kashif Khan, Jochen Linck, Samer Nayfeh, Hassan Nayfeh, Aimen Shabra, and Ahmed Yahia. These friends made my stay at MIT a memorable one.

To my family

I am really grateful to my parents for their continuous encouragement and support during the past two years. I know that they have undertaken great sacrifices in sending me to MIT for my graduate education. I thank them sincerely.

I also thank my caring brother and sister for their love. Their letters and e-mails provided enormous emotional support during the past two years.

At the end of my stay at MIT I married Sadia and I am very fortunate to have her with me for the past month. Her caring nature and patience have really added value and meaning to my life.

This thesis is dedicated to the memory of my grandfather Haji Muhammad Suleman, whose metal forging factory introduced me to the exciting world of manufacturing.

All praise be to Allah, the most beneficent, the most merciful.

CONTENTS

i. LIST OF FIGURES

ii. LIST OF TABLES

iii. LIST OF EXAMPLES

iv. PRODUCTION SYSTEM OBSERVATIONS

v. SYSTEM DESIGN OBJECTIVES

vi. SUB-SYSTEM DESIGN PRINCIPLES

vii. MANUFACTURING PROCESS DESIGN PRINCIPLE

viii. EQUIPMENT DESIGN PRINCIPLE

Chapter 1
INTRODUCTION TO THE PRODUCTION SYSTEM DESIGN PROCESS

1.1 Purpose of the Production System Design Methodology

The purpose of this methodology is to develop a framework for Production System Design with emphasis on formulating *principles (rules)* for *Sub-system and Equipment Design.*

An engineer who is designing and improving Production Systems must be given a methodology that can guide him at each stage of the design process. The methodology that is required to design a Production System is *different* from one that is required to improve one. This methodology is to be used when designing new Production Systems although the material presented can be used with modification to improve existing ones. While creating this methodology, care was taken not to make it rigid. This allows system designers to demonstrate their own creativity during the design process.

The *Production System Design Methodology* will not provide recipes for all cases of sub-system and equipment design but will guide the user in a systematic manner through the different stages of equipment design and development activity starting from sub-system design. Verification documents will be used to make sure that the user has completed all tasks and documented all concerns and conclusions. These documents will help in fine-tuning and refining the methodology in the future.

1.2 The Production Function

In this section we look at the Production System in detail and define useful terminology that will be used throughout this document. Process and Operation elements are also listed with brief descriptions.

1.2.1 Process, Operation and Information flow

Production is a network of *processes, operations*[1] and *information flow*. A *process* is the transformation of material into product and this transformation is accomplished through a series of *operations*. *Information flow is* required to initiate and assist both process and operation.

1. Process: The course by which material is transformed into product is process. In process, focus is on the ***flow*** of material.

2. Operation: The actions performed on the material by machines and workers. In operation, focus is on the ***actions*** done by the worker or the machine to transform the product. In operation, we look at the steps the worker or the machine does. These steps are not necessarily related to the flow of material.

---

[1] Shigeo Shingo, A Study of the Toyota Production System From an Industrial Engineering Viewpoint (Protland, Oregon: Productivity Press, 1989. Page 3)

3. Information flow: There are two kinds of information, *records* and *control.* Records are used to refer to general instructions such as maintenance procedures, blueprints and quality instructions. Control is used to refer to the instructions that are required to initiate and assist the flow of material, and the instructions required to initiate and assist the operations done by machines and workers.

When we look at *process,* we see a flow of material from raw material to semi-processed component to finished product, we see the transformation of material to finished product. When we look at *operation,* on the other hand, we see the work performed by machines and workers to accomplish this transformation - the interaction of equipment and the flow of workers in time and space[2].

Process design consists of designing the flow of material or product; **operation design** consists of designing the work procedures performed on products by worker and machine.

Similarly, **process analysis** examines the flow of material or product; **operation analysis** examines the work performed on products by worker and machine.

Information flow is an integral part of production and must be designed/analyzed during Production System design/analysis.

---

[2] Shigeo Shingo, A Study of the Toyota Production System From an Industrial Engineering Viewpoint (Protland, Oregon: Productivity Press, 1989. Page 4)

Let us consider an example to clarify the difference between process and operation and see how information flow is required to initiate and assist production.

EXAMPLE 1.1: Process and operation in housing machining.

Consider the machining of housings in a plant as an example. Raw extrusions come into the warehouse of a plant, they are transferred into 12 piece bins, then they are transferred via Automated Guided Vehicles (AGVs) to the machining cell, where they are machined, inspected and transferred to the de-burr and wash area. There they are de-burred, washed and inspected. Then they are transferred via AGVs to the assembly line. **This series of changes to the part (extrusions) is *process*.** In order to carry out this series of changes, ***control*** information is required to schedule the flow of extrusions.

In the warehouse, workers transfer the raw extrusions into 12 piece bins. **The series of actions done by the workers to do this is *operation*.** The extrusions are machined and inspected in the machining cell. The workers interact with the Machining Centers to machine the extrusions and then inspect them. **Similarly, this interaction and the series of actions done by the workers and the machines is *operation*.** While doing inspections, the workers compare the machined dimensions to ***records*** of information about the housing.

1.2.2 Process and Operational Efficiency

Very often in engineering, emphasis is given to operations before process. It is proposed in this analysis that process is at a higher level of hierarchy than

operations. ***The design and improvement of any production system should focus on process before operations.*** This simple but fundamental rule is violated in many design and improvement activities resulting in bad designs and overall decrease in efficiency. Here it is important to define two kinds of efficiencies.

1. Process Efficiency: Process efficiency is a measure of how well the production process is converting raw material into finished goods by using its resources.

2. Operational Efficiency: Operational efficiency is a measure of how each individual operation is using its resources to accomplish the set of actions desired of that operation.

Here we clearly see that process efficiency has greater effect on the efficiency of the Production System and as engineers our priority should be to maximize process efficiency before improving operational efficiency. Operational efficiency does not mean any thing other than how well we are doing a single operation. Sometimes increasing operational efficiency without bound will actually decrease the overall efficiency of the Production System as we shall see in Example 1.2.

Shigeo Shingo writes in his book "Zero Quality Control: Source Inspection and the Poka-yoke System[3]":

"I have come across many plants where, operational efficiency is stressed to the neglect of process efficiency. In other words I have seen a number of cases

---

[3] Shigeo Shingo, Zero Quality Control, Source Inspection and the Pokayoke System (Portland, Oregon: Productivity Press, 1986. Page 15)

in which homogeneous machine layouts mean extra transportation or stock accumulates all over plants because batch systems or process systems have been adopted in the hope of pushing machine capacities to the limit."

Operations should supplement process. The Production System will only run smoothly and efficiently if the network of process, operations and information flow is in complete harmony. If we just focus on operational efficiency while disregarding process efficiency, we might be decreasing the efficiency of the Production System or might not be improving it in the most optimal manner. Let us consider another example that analyses the network of process and operation.

EXAMPLE 1.2: Housing transportation operation.

In this example we will consider the transportation of housings in detail. In Figure 1.1, the Y-axis shows the process flow and the X-axis shows the operations. It is important to understand that operations and process are not always in-line. By representing them orthogonally[4] we have a better representation of the production function. In Figure 1.1 we see that transportation is a process element represented by the arrow symbol in the Y-axis. In order to accomplish this, imagine the interaction of worker and forklift in the X-axis. In order to transport the housing, the worker has to start the forklift, lift the basket of raw housings, drive it to the machining cell and place the basket on the work-in-process buffer. This series of actions are not all the time in line with the flow of the housings (Y-axis). By treating process and operations as

orthogonal, we will not commit the mistake of assuming that operational efficiency leads to Production System efficiency in all cases. Figure 1.1 clearly shows that the movements of the forklift and operator are not all the time in line with the flow of housings and it is important to consider process and operation as orthogonal.

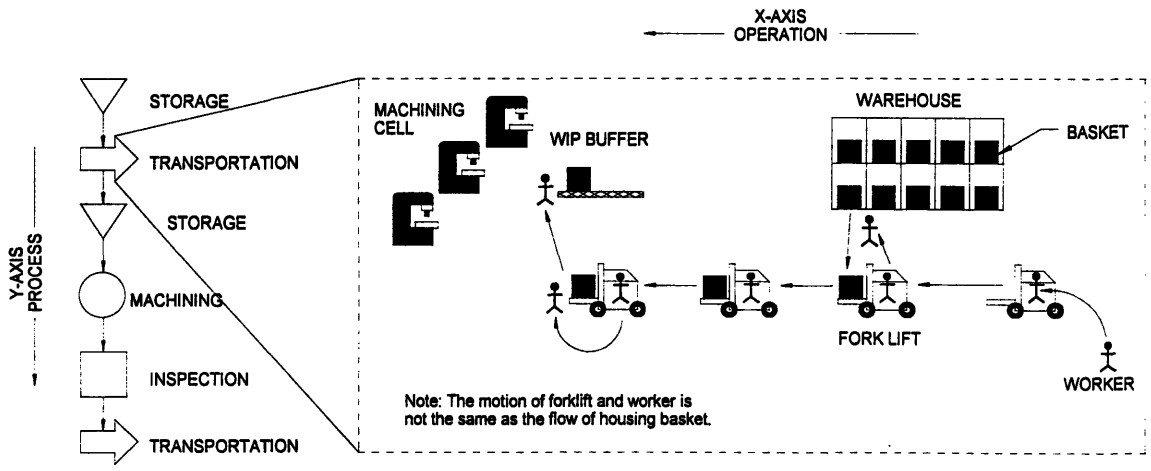

FIGURE 1.1: Process and operation network (orthogonal).

As another example let us consider process A which is upstream of process B. Now if process A keeps producing even if process B does not require any parts, inventory will build up before process B. The buildup of inventory before process B will require more workers to take care of this excess work-in-process inventory. It would probably be temporarily transferred to another location, labeled and stored, a practice not uncommon in many plants. This practice will only increase the ***operational efficiency*** of process A but the efficiency of the whole system will go down because of the wasted effort which

---

[4] Shigeo Shingo, Non-Stock Production: The Shingo System for Continuous Improvement (Portland, Oregon: Productivity Press, 1986. Page 8)

decreased ***process efficiency***.

It is important to realize that operations should assist process, not disrupt it. ***An ideal system would be one in which operations and process are both efficient, in-line and are initiated and assisted by minimum information flow.***

1.2.3 Process and Operation Elements

PRODUCTION SYSTEM OBSERVATION 1

A process element consists of Processing, Inspection, Transportation and Storage (or Delay).

Before designing and improving process, we must fully understand what process consists of. Four distinct process elements can be identified as raw materials are transformed into semi-processed components and then into finished product. The following section describes these four elements and their sub-components in detail.

Process Elements

1. Processing: A physical change in the material or its quality.

There are two types of processing:

i. Assembly: Actual joining of two sub-components such as fastening a bracket onto a housing.

ii. Fabrication: Changing the shape or quality of an individual component by a manufacturing process such as machining, sand blasting, etc.

2. Inspection: Comparison with an established standard. Example: Checking if a machined shaft is within specified tolerances.

3. Transportation: The movement of material or products; a change in position. Example: Movement of a housing from a machining cell to an assembly cell.

4. Storage (Delay): A period of time during which no processing, inspection, or transport occur.

Further, there are two types of storage:

i. Process storage (delay): An entire lot waits while the previous lot is processed, inspected, or moved.

ii. Lot storage (delay): In lot operations, while one piece is processed, the others wait. They wait either to be processed or for the rest of the lot to be done. This also occurs in inspection and transport.

Table 1.1 shows the Process symbols used to represent process elements.

PROCESS ELEMENT	PROCESSING		INSPECTION	TRANSPORTATION	STORAGE (DELAY)	
	ASSEMBLY	FABRICATION			PROCESS	LOT
SYMBOL						

TABLE 1.1: Process symbols representing process elements and their sub-components.

PRODUCTION SYSTEM OBSERVATION 2

An operation element consists of Setup operation, Principal operation, Margin allowance and Personal Allowance.

Operation Elements

Operations can be divided into four main categories also:

1. Setup Operations: Setup consists of preparation that is done before and after operations, such as removing jigs, inserting cutting tools, entering tool lengths etc.

2. Principal Operations: Operations that are done in each cycle. These can be divided into Essential and Incidental operations.

i. Essential operations are operations that are required to accomplish the principal operation. They are actions like machining a casting, inspecting a dimension with a Go/No go gage, moving parts from machining to the wash area etc.

ii. Incidental operations consist of actions that help assist in accomplishing the essential operations. They are actions like picking up a casting to put it in the fixture for machining, fitting a part in a gage to measure it, etc.

3. Margin allowance: There are two types of Margin allowances:

i. Operation allowance is the work indirectly related to the job, e.g., removing chips from machines, lubricating machines, attending to rework, fixing machine breakdowns, etc.

ii. Workplace allowance is the work associated with the whole workplace, e.g., supplying tools for the machines, cleaning shop floor, etc.

4. Personal allowance: There are also two types of Personal allowances:

i. Fatigue allowance is the rest period between operations that is necessary because of the intensity of the job.

ii. Physical allowance is the total break period during the day that is necessary for physical reasons, e.g., drinking water, eating lunch, going to the toilet, etc.

1.3 Value and Waste

In the next two sections, value and waste are defined in detail. A clear understanding of value and waste is a prerequisite to effective Production System design and improvement.

1.3.1 What is Value?

PRODUCTION SYSTEM OBSERVATION 3

Value is defined as any absolutely necessary process and operation element step that changes the state of the product to meet a specific customer need.

Once we have understood the elements of process and operations we must answer a fundamental question before we embark on Production System design and improvement:

QUESTION

What does our customer pay for and what does the customer really want ?

Only what the customer wants is what the Production System should produce and everything else should be considered waste. The customer is only interested in paying for the **value-added** to the raw material to convert it into finished product. The customer will only give business to the company that can provide the value-added product at the lowest cost. Our design and improvement goal should be to avoid/eliminate all elements of the process and operations that are non value-added. At each design stage it is extremely

essential to keep in mind that a low cost competitive product is the goal. Often in manufacturing facilities we end up optimizing (and heavily investing in) non value-added process and operation elements, instead of avoiding/eliminating them in the first place. At the early sub-system design stage the design team should focus on eliminating all unnecessary process elements by carefully analyzing the product and process designs.

In many plants transportation is optimized using AGVs and automated material handling equipment without giving consideration to the fact that the customer is not interested in these process steps. In most instances, transportation and material handling can be eliminated by bringing machines and equipment closer to each other (improving the layout of the factory).

1.3.2 What is Waste?

PRODUCTION SYSTEM OBSERVATION 4

Waste is defined as any element of the process, operation or information flow that is intentionally not paid by the customer.

In other words waste may be viewed as non value-added process, operation or information flow. It helps to break up waste into two categories, Theoretical waste and Real waste. Theoretically all inspection, transportation and storage are waste but in real life we need all of these elements to supply products to the customer. Real waste represents the waste that can be eliminated with current resources and technologies.

In any design or improvement activity it helps to keep theoretical waste in mind, while eliminating or reducing real waste. Theoretically, a process should only consist of processing and that is the ideal every engineer should strive for and keep in mind. Similarly we should have only the necessary elements of operation and the minimum of information flow required to assist production.

Production System design/improvement in essence is a war against waste. Companies that can avoid waste at the design stage by creative designs and continuously eliminate waste by carrying out improvement activities (kaizen) will be the ones that succeed in the future.

So we can categorize waste into two types:

1. Theoretical Waste: Steps that create no value but are unavoidable with current technologies, production assets and current resources.

2. Real Waste: Steps that create no value and are immediately avoidable. That is, the company has existing resources (manpower, engineering skill and time, etc.) which can be utilized to remove this waste[5].

Also waste appears in many forms in a Production System. The design and improvement engineer must be aware of the following seven forms[6] during all design and improvement stages;

---

[5] One of the qualities of a good production manager is that he/she is able to discover the non-utilized resources in his/her company and put them efficiently into eliminating real waste. Often these resources are hidden in the employees and need to be discovered and utilized.

1. Unnecessary **processing.**
2. Unnecessary **transportation.**
3. Unnecessary **movement** (or motion) of people.
4. **Inventories** of goods awaiting further processing.
5. **Overproduction** of goods. (producing products before they are required and producing more than they are required)
6. **Defects** in products.
7. **Waiting** by employees for equipment to finish its work or for upstream activity.

---

[6] Taiichi Ohno, The Toyota Production System: Beyond Large Scale Production, Productivity Press, 1988, pp. 19-20.

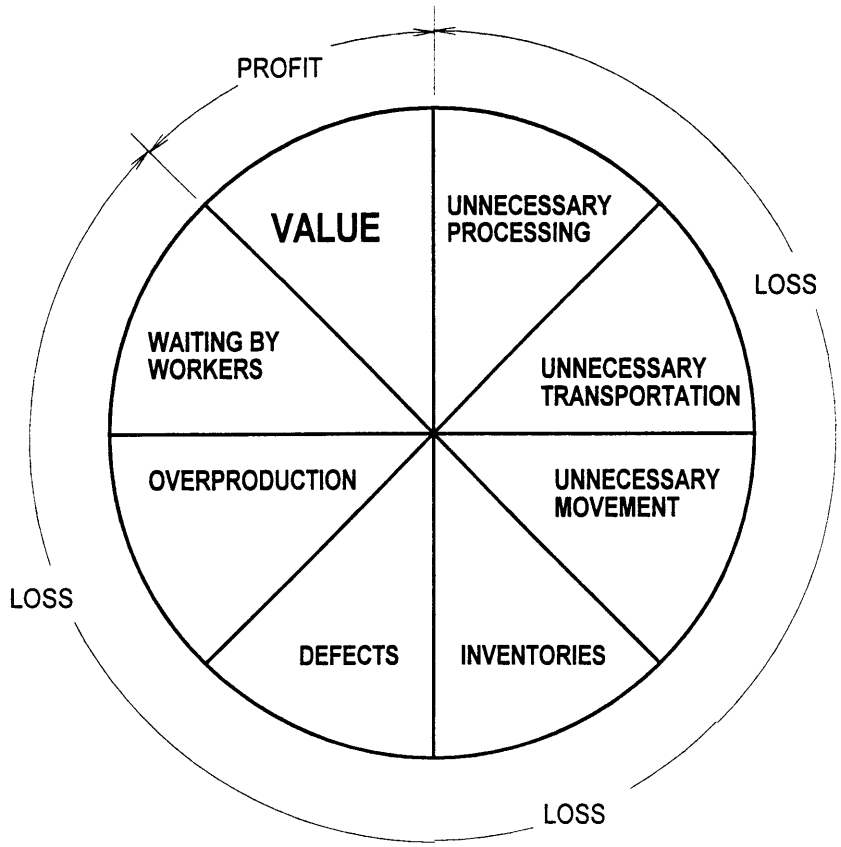

FIGURE 1.2: Seven wastes of production.

Figure 1.2 shows the seven wastes of production as non-value added unnecessary activities.

1.4 Production System, Sub-system and Equipment Definition

A Production System is defined as a complex arrangement of physical elements that converts raw material into finished goods and has measurable

inputs and outputs[7]. The physical elements in the production system are machine tools, tooling, material handling equipment, people, etc. In the context of this methodology, we have defined Production System to consist of sub-systems (cells). The boundaries of the sub-systems will depend on the system at hand but generally we can think of final assembly, sub-assembly and sub-component fabrication as examples of sub-systems. Figure 1.3a and Figure 1.3b show the breakdown of a system into several sub-systems. Material (finished and semi-finished products) and information flow into and out of these sub-systems. The sub-system itself consists of equipment which is designed and arranged to meet the requirements of the sub-system. Figure 1.4 shows an example of a sub-system. It is a final assembly sub-system which has eight Assembly machines (equipment) linked by a palletized conveyor.

[7] The Design of a Factory with a Future. JT Black 1990.

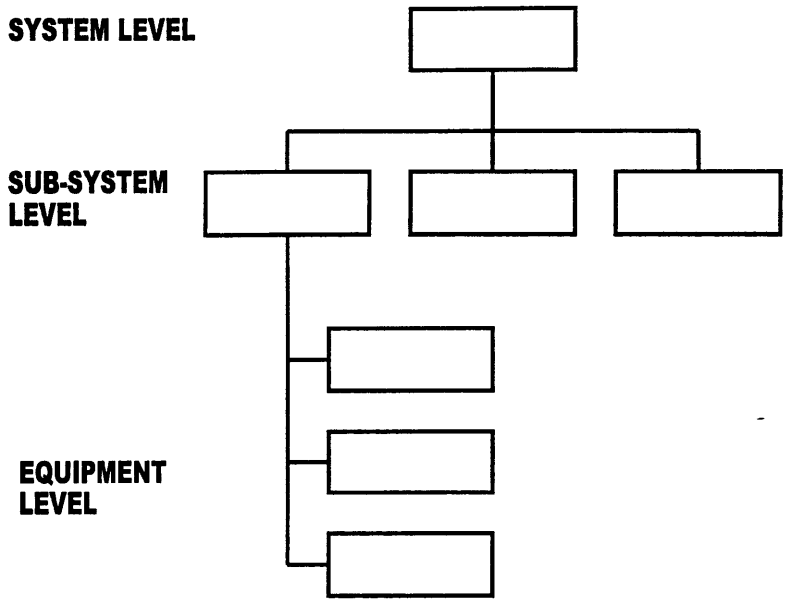

FIGURE 1.3a: System, sub-system and equipment levels.

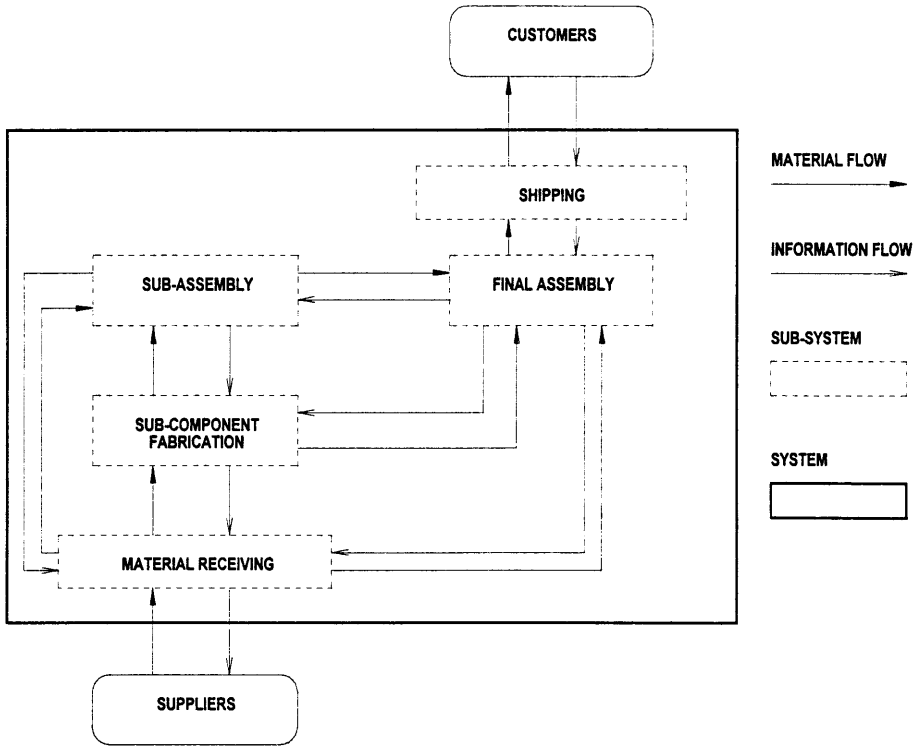

FIGURE 1.3b: A simplified representation of a System. Note that the system consists of several sub-systems (cells) with material and information flow links.

The concept of division of a Production System into sub-systems (cells) and the further division of a sub-system into equipment (machines) is very powerful when designing and analyzing Production Systems. If the sub-systems are designed so that they meet the requirements of the system and then they are linked properly, the Production System will function smoothly. Similarly the proper design and arrangement of the equipment within the sub-system is necessary for the smooth functioning of a sub-system.

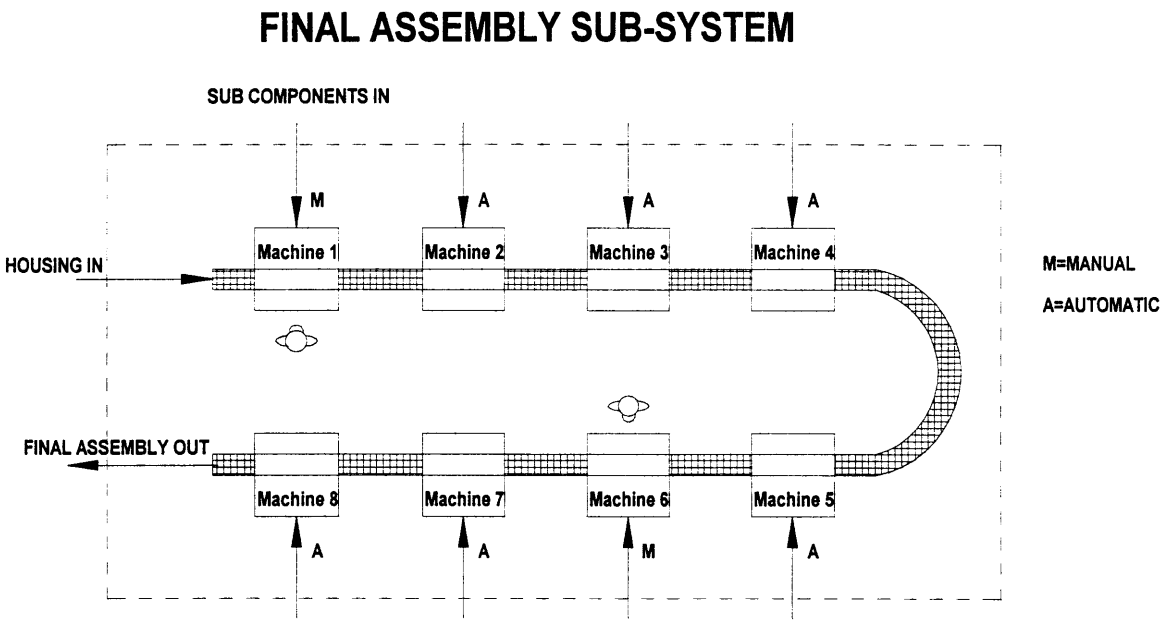

FIGURE 1.4: A Final Assembly sub-system consisting of eight assembly machines arranged in a U-shaped layout. The sub-system has two manual and six automated stations.

1.5 Production System Design Objectives

Production Systems are designed to produce products to meet customer demands. In today's market, customers are demanding customized products at

fluctuating rates. As engineers that design Production Systems we must understand the goals of the System that will function smoothly in today's ever changing and competitive market.

This methodology is based on two primary design objectives for a system. These design objectives are;

SYSTEM DESIGN OBJECTIVE 1

Design the System to be *flexible*.

The Production System should have three related types of flexibility;

1. **Volume flexibility:** The ability of a system to change the production volume (with near proportional changes in the variable cost of the product) to meet the customer demand for a product.

2. **Product type (mix) flexibility:** The ability of a system to produce different types (mix) of the same product to meet the custom needs of customer.

3. **Future model flexibility:** The ability of a system to adapt to future model changes in the product with minimum reinvestment.

SYSTEM DESIGN OBJECTIVE 2

Design the System with minimum *waste*[8].

These design objectives should be in the back of the mind of every System Design engineer. These two objectives are the crux of the Production System design problem[9]. The goal of this methodology is to provide a systematic way of achieving these objectives.

1.6 Equipment Design Methodology Flowchart

Figure 1.5 shows the sequence of tasks that need to be accomplished in the process of designing or purchasing a piece of equipment that is to be put into a sub-system. The detailed steps that are required to accomplish each of these tasks will be described in the relevant sections of this methodology. Also guidelines and design rules will be given where applicable to help accomplish each of the tasks in a systematic manner. Examples from industry will also be given to illustrate and amplify equipment design rules.

---

[8] Another insightful definition of *waste* is given by Fujio Cho of Toyota. He defines waste as "anything other than the minimum amount of equipment, materials, parts, space, and worker's time, which are absolutely essential to add value to the product." , The New Manufacturing Challenge, Suzaki.

[9] As designers, we should think of problems as opportunities. To meet the system objectives mentioned above is a tremendous design opportunity which should excite all engineers.

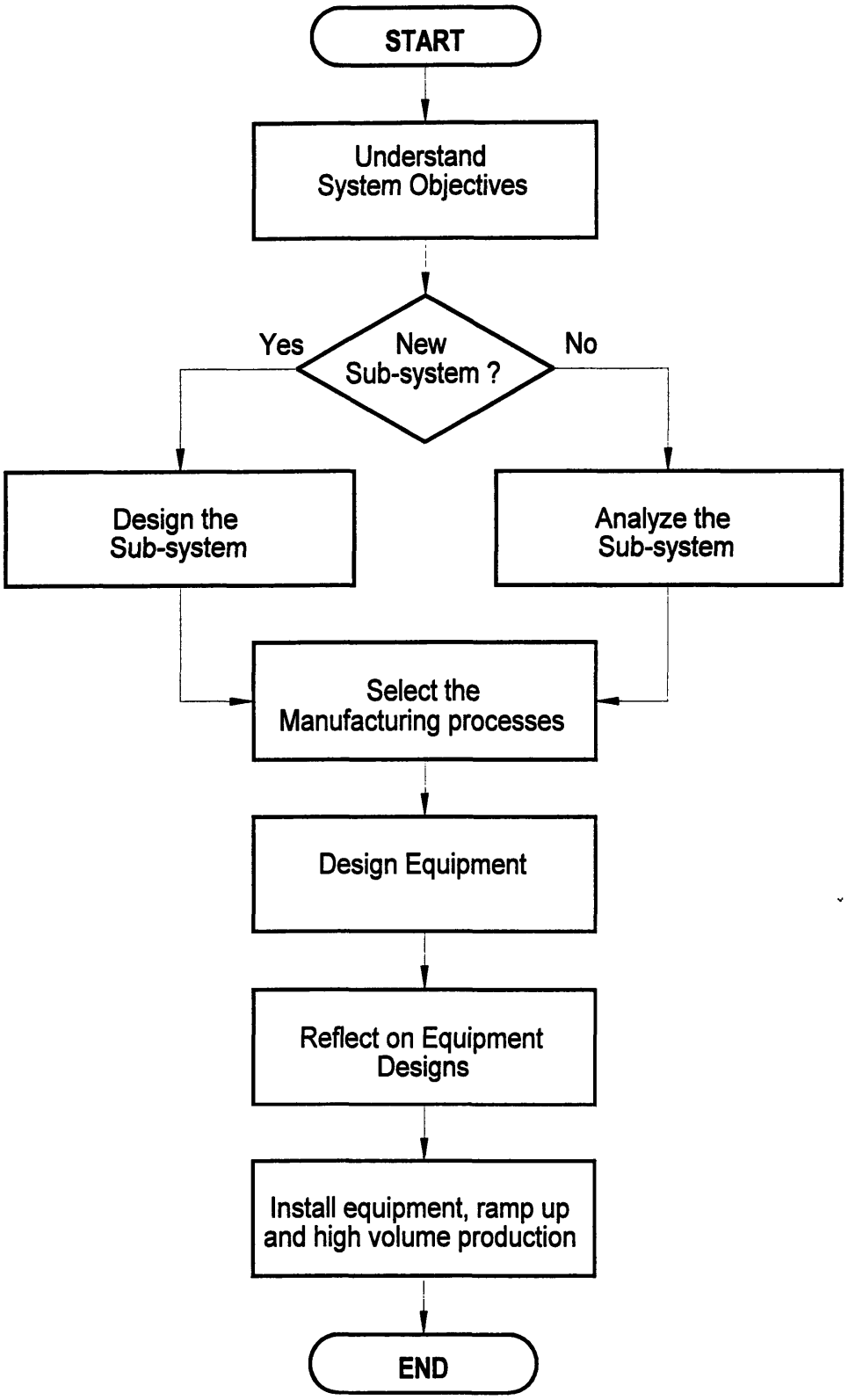

FIGURE 1.5: Flowchart of the Production System Design Methodology.

Chapter 2
SUB-SYSTEM DESIGN

2.1 Introduction to Sub-system Design

As discussed in Chapter 1, the Production System has two objectives of *flexibility* and *minimum* waste. These objectives can be systematically achieved by designing the sub-systems with the above objectives in mind and then linking the sub-systems in such a way that production in synchronous in all the sub-systems.

Sub-system design consists of process design, operation design and information system design (both record and control). Process, operation and information flow must be in harmony in an efficient sub-system. How this harmony can be achieved is described in this chapter. The demand for a product or a group of products is the driving force of the Production System. The Production Sub-system must be designed to meet this demand smoothly. Understanding the customer demand and the fluctuations associated with it is the key to Sub-system Design. The next section discusses this in detail.

The methodology presented in the next sections will revolve around the design objectives of flexibility and minimum waste. Therefore it is important that

the three types of flexibility and the seven forms of waste are ingrained in every system design engineer[10].

2.2 Demand and Responses to Fluctuations in Demand

The first step in Sub-system Design is to understand the customer demand for the product and the associated delivery schedules. The demand and delivery schedules must be understood (and even negotiated with the customer) up front in the Sub-system Design process. In many new sub-systems, the engineers disregard the available information about the demand of the product and the delivery schedule requested (or demanded) by the customer. This practice results in designs that are not responsive to customer demand fluctuations and production not being in synchronization with the demanded product delivery schedules. Based on this reasoning, we can formulate the first Sub-system Design principle;

SUB-SYSTEM DESIGN PRINCIPLE 1

Understand and monitor the customer demand and delivery schedule of the product throughout the Sub-system design process. From the customer demand generate the Takt Time for the life of the product.

---

[10] In Production, nothing is more challenging to me than identifying waste and nothing is more creative and rewarding than eliminating/avoiding this waste with ingenious low cost solutions. The foundation of a Lean Production System lies in teaching the skills of identifying waste to every employee in the company.

What is Takt Time?

Takt time is the time required to produce one unit of customer demand. Takt time is a function of the customer demand and the available operating time and the takt time fluctuates due to changes in customer demand and the available operating time. The following two equations define takt time;

$$\text{Average Demand per Day} = \frac{\text{Average Demand per Month}}{\text{Available Days per Month}}$$

$$\text{Takt Time} = \frac{\text{Available Time (seconds) per Day}}{\text{Average Demand per Day}}$$

While we are in the process of understanding the customer demand, the following questions come to mind which need to be addressed;

QUESTIONS

1. How many customers do we have?
2. How many different product types are being demanded? (Some customers may demand the same product type or one customer may demand more than one product type.)
3. What volume is each customer demanding as a function of time?
4. Is the demand guaranteed and what deviations from customer demand are expected?

5. What is the delivery schedule demanded by the customer and is this schedule negotiable? (The load on the shipping sub-system personnel can be smoothed if the delivery schedule is divided over the production days.)
6. Are there any special customer attributes (some customers might be very concerned about quality or delivery time, others may be more interested in procedures like FMEA or QS9000) or special customer requirements?

These questions must be thoroughly answered and it is recommended that a spreadsheet be made and continuously updated to monitor the predicted customer demand over as many years as the data is available. Information about customer demand is too valuable to be ignored or delayed. Information about changes in demand should be quickly communicated to the Sub-system Design engineers so that they can make informed decisions about the required capacity as a function of time over the life of the product.

Also, how the scheduling will be done once the product is in production should be determined before any Sub-system Design decisions are made. Scheduling (or timing of production) has a great impact on the responsiveness of a company to meet the demand of its customer. Production should be planned in at least three stages. Thinking of scheduling in the three stages described below, simplifies Sub-system Design and makes it more responsive to changes in customer demand which are natural in today's competitive markets. The three scheduling stages are;

1. **Long Term Schedule** (annual load plan),
2. **Intermediate Term Schedule** (monthly load plan), and
3. **Short Term Schedule** (load plan for one day).

1. Long Term Schedule (annual load plan)

The long term schedule is generally speculative and based on forecasts. The long term schedule can span for more than one year if this information is given by the customer. The long term schedule is used to determine the capacity of the sub-system to be designed. It must be kept in mind that the actual or short term schedule will be different from the long term speculative schedule. The real challenge in Sub-system Design is to design the sub-system in such a way that it can easily adapt to changes in customer demand. The production strategies that can be used to achieve this volume flexibility are discussed in Section 2.3.

2. Intermediate Term Schedule (monthly load plan)

The intermediate term schedule can be a confirmed plan if the orders are determined and guaranteed. Otherwise it will be speculative. Typically in today's market, it will be speculative for some customers (which practice *just-in-time* (JIT) production and are in pursuit of cutting inventories) and deterministic for others (which are still practicing large lot speculative production and rely heavily on forecasts). What is important is not whether intermediate (monthly) term schedule is speculative or confirmed in nature but what its function is and to what end it should be used. The main purpose of the intermediate schedule is to inform the sub-systems about the expected demand for the next month so that they can adjust their resources to meet this demand. The intermediate schedule is only used after the sub-system has been designed and its purpose is to prepare the sub-systems for the expected demand. It is primarily used to set the right manpower for the next month, add or remove machines, change machine layouts, etc., so that capacity is balanced with the load.

The ability of the Sub-system to set the manpower, add or remove machines, change machine layouts will largely depend on its design. Some Sub-systems are very rigid in nature and the above mentioned changes are almost impossible to carry out on a monthly basis. A volume flexible sub-system is one which is very ***fluid*** in nature and it runs efficiently on both the high and low ends of the demand. Based on the volume flexibility requirement, we can formulate the second Sub-system Design principle;

SUB-SYSTEM DESIGN PRINCIPLE 2

Since long and intermediate schedules are speculative in nature, design the sub-system to be volume flexible and easy to reconfigure so as to adapt to changes in demand.

3. Short Term Schedule (load plan for one day)

This schedule is the only schedule that is confirmed because it is for a short period of time. The sub-system should only produce what is required by the short term schedule. The exact demand (load) for a production day is communicated to the sub-systems daily which makes it possible for the sub-systems to respond to daily demand fluctuations.

EXAMPLE 2.1: Monthly, 10 Day, and Daily Production Planning at company T[11].

Monthly Production Plan

At company T, the production plan for the month of September is based on the orders received by August 20. In preparing the production plan for September, careful consideration is given to the available capacity of the sub-systems[12]. The plan for September includes projections for all the components that will be required by each of the sub-systems. Figure 2.1 shows the monthly plan for company T. The plan also distributes the products to be manufactured over all the production days of the month. This is called Divided Small Lot Production and will be discussed in the next section.

This monthly plan at company T is communicated to all the sub-systems. This enables the sub-systems to allocate personnel, materials, and capacity for the coming month. Also at the same time the preliminary plans for October and November are prepared.

10 Day Production Plan

The next level of production planning at company T is the 10-day planning. At company T, production is divided into three periods of ten days each. The plan for each of the 10 day period is communicated in the middle of the previous 10 day period. For example, the plan for September 1-10 is communicated on the August 25. The plan for September 11-20 is communicated

---

[11] This example is adopted from, "Toyota Production System", 1992 Toyota Motor Corporation.
[12] This shows the importance to knowing the available capacity of the equipment in the sub-system at all times.

on September 5 and so on. The monthly plan and 10 day plan at company T are only speculative and are used to fine tune the resources that will be required during the next month or the next 10 days. The only plan that is determined and will be used to trigger production is the Daily Production Plan.

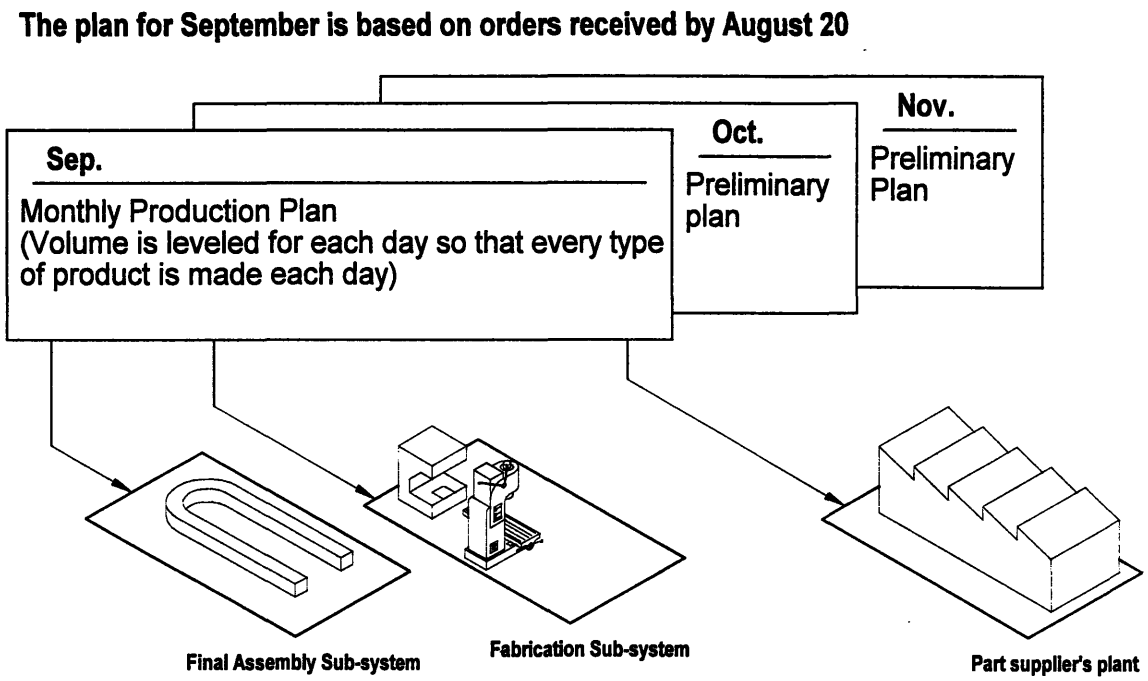

FIGURE 2.1: The Monthly Production Plan at company T.

Daily Production Plan

Daily production plan is the most refined of all plans and is not speculative but represents the actual demand that the customer wants to be delivered to its plant. This plan is communicated each day to all the sub-systems. The sub-systems can respond to these changes since the product volume is evenly distributed over the month. (See Divided small lot production or Mixed production in section 2.3)

Based on the daily production plan, managers at company T plan the exact sequence of production for the third working day after they receive the daily production plan. So the demand leads the production by three days. This period of three days gives enough time for the sub-systems to adjust the production volumes. The sub-systems only produce the required number of units and do not resort to overproduction.

2.3 Four Production Approaches

Let us consider the monthly demand for three products A, B and C. The demand is shown in Table 2.1. There could be four approaches to meet this customer demand for the products as we reduce the production lot sizes to make the Production System more and more flexible.

PRODUCT	DEMAND
A	120,000
B	120,000
C	120,000

TABLE 2.1: Monthly demand for three products A, B and C.

1. Large Lot Production System

In the Large Lot Production System, we produce product A in the first 10 days, product B in the middle 10 days and product C in the last 10 days of the month. This approach is very traditional and results in the accumulation of excess inventory over the period of the month. For example, we produce A during the first 10 days and then it is consumed over the course of the month. Similarly we would have to carry excess inventory for B and C from the previous month's production to meet the customer demand.

Apart from the large inventory carrying costs, the biggest disadvantage of the Large Lot Production System is that production load is determined at the beginning of the month and cannot be easily changed if the customer changes the demand for the product during the month (which is very natural). This leads to the waste of excess inventory and overproduction in case the demand falls down. Also the Large Lot Production System can not respond to a switch in demand from one product to another. It is almost impossible to respond to an increase in the demand for product B and a decrease in demand for product A in the middle of the month.

Days 1-10	Days 11-20	Days 21-30
120,000 A	120,000 B	120,000 C

TABLE 2.2: The production schedule (plan) for a Large Lot Production System.

The Large Lot Production System can be represented by a simple timing diagram for a month shown in Table 2.2. A rational question that comes to mind is;

QUESTION

Why have companies resorted to large lot production despite its disadvantages?

The answer is that because of the large changeover times companies resort to large lot production. We can see from Table 2.2 that only three changeovers are required in a month to produce products A,B and C. One solution these companies have missed is to reduce the changeover time itself, thereby destroying the myth of Economic Order Quantity (producing in lots determined by a calculation that assumes the changeover time as fixed).

One important point that all sub-system designers must understand is that the changeover (setup) time of a sub-system depends to a large extent on the design of the sub-system and the selection of the processing equipment. Section 2.6 will present a simple model to determine the changeover time at the early Sub-system Design stage. A quick changeover is a fundamental building block of a Lean (*just-in-time*) Production System. Its importance can be highlighted by formulating the third Sub-system Design principle;

SUB-SYSTEM DESIGN PRINCIPLE 3

The changeover time for a sub-system is a critical performance parameter and *must* be determined at the early design stage. The sub-system should then be designed to meet this changeover time at a low investment cost.

The Large Lot Production System is not compatible with the rapidly changing customer demands that we experience in industry nowadays and ***must not*** be considered as a design option.

2. Leveled Production System

In the Leveled Production System, production is divided between products A, B and C during each of the ten day periods of the month. This means that during the first 10 days, 40,000 units of product A, 40,000 units of product B, and 40,000 units of product C are made. In leveled production, schedule is revised every 10 days which makes this system more flexible than the Large Lot Production System. Also, inventories are minimized over the period of the month since customers are delivered products every ten days instead of every month. Table 2.3 shows the timing diagram for a Leveled Production System. Notice that the changeovers have increased to nine per month which emphasizes the importance of a small changeover time.

Days 1-10			Days 11-20			Days 21-30		
40,000 A	40,000 B	40,000 C	40,000 A	40,000 B	40,000 C	40,000 A	40,000 B	40,000 C

TABLE 2.3: The production schedule (plan) for a Leveled Production System.

3. Divided Small Lot Production System

In the Divided Small Lot Production System, production is carried out so that product A, B and C are made everyday. This means that we will produce 4,000 units of A, followed by 4,000 units of B and then 4,000 units of C every production day. The timing diagram for divided small lot production is shown in Table 2.4. Three changeovers are required each day resulting in a total of 30 changeovers over the course of the month.

Day 1			Day 2			. . .	Day 30		
4,000 A	4,000 B	4,000 C	4,000 A	4,000 B	4,000 C	. . .	4,000 A	4,000 B	4,000 C

TABLE 2.4: The production schedule for a Divided Small Lot Production System.

4. Mixed Production System

The Mixed Production System is the most flexible of all production systems. In this system one unit of A is followed by one unit of B which is followed by one unit of C. In mixed production a schedule can be changed instantly at any time. The number of changeovers are high in mixed production and this kind of system is only feasible if the changeover time is completely eliminated or negligible. Table 2.5 shows the timing diagram for a Mixed

Day 1								
1 unit A	1 unit B	1 unit C	1 unit A	1 unit B	1 unit C	. . .	1 unit A	1 unit B

TABLE 2.5: Production schedule (plan) for a Mixed Production System.

Production System.

After the customer demands and expected delivery schedules are determined, the next step in Sub-system Design is to choose the Production System that will best meet customer demand and delivery schedules. In almost all cases Large Lot Production System should not even be considered as an option as it is very inflexible. Leveled production is a good starting point and mixed production is the ideal with enormous flexibility. The designer must be careful not to over invest in order to pursue the ideal of mixed production. In some cases mixed production can be very difficult because of the complexity and variety of the product and the manufacturing processes used to fabricate or assemble the product. Divided Small Lot Production is highly recommended. Another approach that is more flexible than divided small lot production is to produce all types of the product each shift instead of each day. This system, which we can call the ***Shift Production System*** is an excellent compromise between the Divided Small Lot Production System and the Mixed Production System.

In many plants, the way the production will be carried out is not decided until after the sub-systems are designed and fabricated. As we discussed earlier, the design will then dictate the production approach. Therefore it is extremely important to choose the production approach that best meets the customer demand and delivery schedules at the conceptual stage of Sub-system Design. The fourth design principle for sub-systems is based on the importance of choosing the right production method (approach) at the right time;

SUB-SYSTEM DESIGN PRINCIPLE 4

The sub-system should be designed to meet the identified production method (approach). The production method (approach) ***must*** be determined at the conceptual stage of Sub-system Design.

One of these four production methods or a method in between this spectrum will meet the desired customer demand and delivery schedules. Table 2.6 compares the two extremes of large lot production and mixed production. The decision of which system to choose will be an iterative process. Mixed production should be considered as the ideal. If the product types are small in number and the manufacturing processes allow for fast changeovers, mixed production should be pursued. Otherwise shift production and divided small lot production should be considered. In almost all production scenarios, divided small lot production can be achieved and is an excellent option because still the production schedule can be updated everyday giving the system the desired flexibility to follow the customer demand. Large lot production should be avoided in all cases.

PARAMETER	Large Lot Production System	Mixed Production System
Inventory	1. High inventories. 2. Unusable products are more likely.	1. Low inventories. 2. Unusable products are not likely at all.
Flexibility	1. Production schedule can be changed only once per month making the system very inflexible.	1. The production schedule can be changed at any time making the system very responsive to changes in demand.
Space	1. Large storage space required to store RM, WIP and FG.	1. Minimal space is required.
Setup Time	1. Setup time is not important and there is no focus on reducing the setup time.	1. Setup (changeover) time becomes very important and slow changeovers can no longer be tolerated. 2. Short setups must be designed into the Production System at the system design stage.
Quality Control	1. Quality of products is low compared to mixed production because defects are tolerated due to large inventories.	1. Quality of product is high but measures to identify the proper components during assembly or fabrication are required. Pokayoke devices can be effectively used to achieve this.
Quantity and Variety Control	1. Minimal quantity control of daily production because production is not synchronized with demand. Emphasis is on maximum machine utilization.	1. Good production quantity control because every day, only the desired quantity and mix is built.

TABLE 2.6: Comparison of the Large Lot Production System and the Mixed Production System

The decision to choose the right production method (approach) can not be made without considering the number of different product types to be manufactured, the complexity of the product and the limit to which the changeover time can be reduced. Section 2.6 will present guidelines for this selection, once the significance of changeover time between products has been elaborated upon.

2.4 Processing Flow Diagram as a Sub-system Design Tool

After deciding the production schedule and the best production method (approach), the next step is to draw the complete Processing Flow Diagram for the product that is to be manufactured.

The Processing Flow diagram is different from the Process Flow diagram because it only shows the sequence of the value added steps and necessary Testing that is required to manufacture the product. It does not show the transportation and storage steps because at this time in the design process, the system is only at the conceptual stage and these functions are not yet known or designed. In fact, our design objective is to minimize the waste of storage (delay) and transportation and to reduce the investment in these two functions as much as possible. Focusing on the Processing Flow Diagram will help us achieve this goal.

The Processing Flow Diagram focuses our attention on the value-added processing steps and the necessary Testing that is required to guarantee a quality product. The Testing is required to guarantee that the product is functioning

properly. These Tests do not include the inspections that determine that a processing step accomplished its function[13]. Testing is made to ensure that the product is functioning properly and is usually specified by the product designers at the product design stage.

Figure 2.2 shows an example processing flow diagram. Notice that the diagram shows only the required processing and testing steps in the right sequence. A look at the complete processing flow diagram of a product will tell what is value-added. The details of each processing step should be documented in the associated precedence flow diagrams as the design process continues.

After the Processing Flow Diagram has been completed, the engineers should ask the next two questions about each processing step, before continuing with Sub-system Design;

QUESTIONS

1. Why do we need this processing step and is it really adding value?
2. How can I avoid this processing step?

From Figure 2.2, it can be seen that the housings are machined, de-burred and then washed before they go to the final assembly. Here the question to ask could be: How can I avoid the de-burring processing step by machining at

---

[13] The word *Testing* will be used to refer to checking the functionality of the product and the word *inspection* will be used to refer to checking the proper working of the processing step. For example, a Leak test of a valve is *Testing* , and to check if the hole in the valve is of the right dimension is *Inspection*.

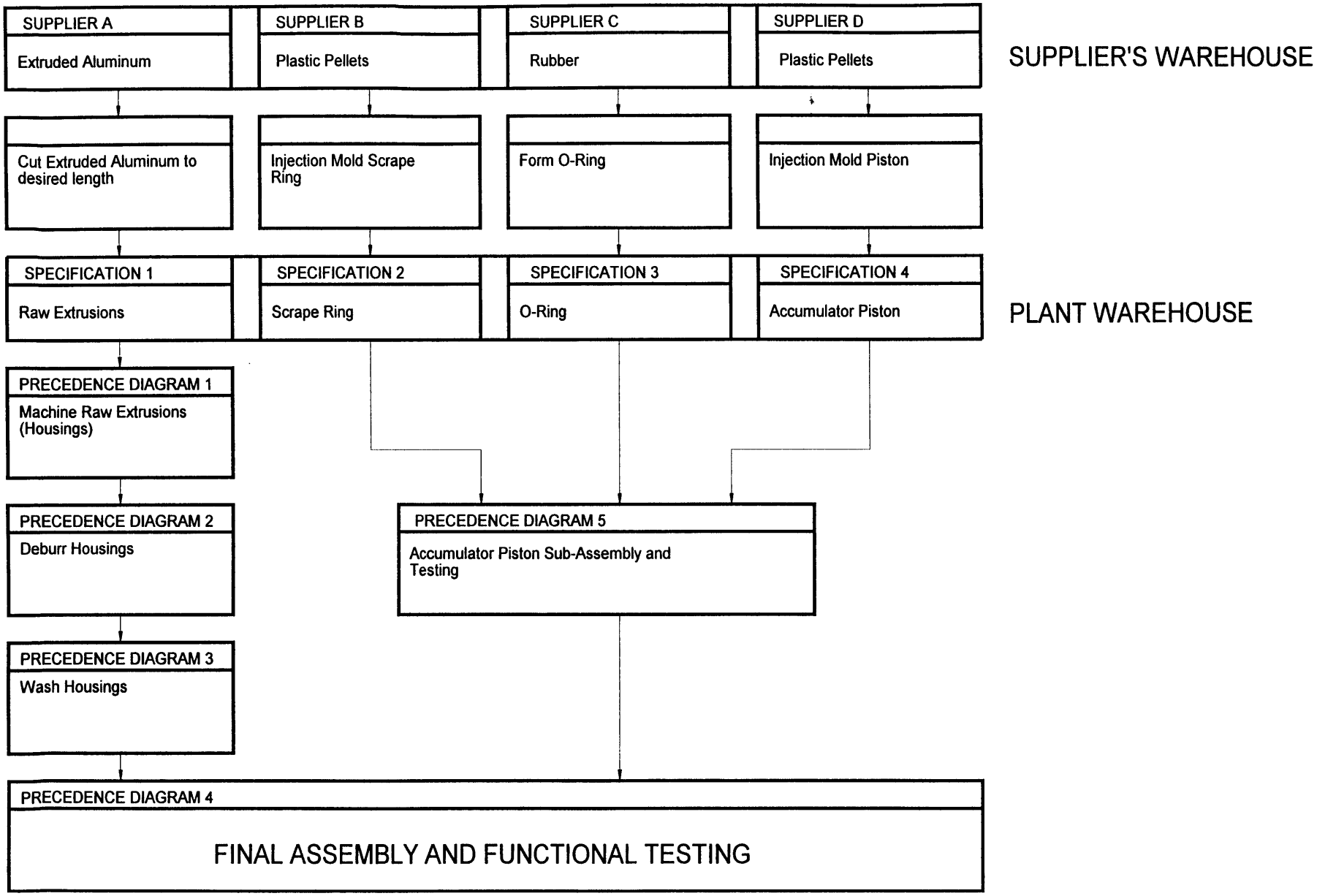

FIGURE 2.2: An Example Processing Flow Diagram

different feeds and speeds so that burrs are not produced? Also, the engineers should be looking out for innovative manufacturing processes that will streamline the processing flow by making certain processing steps unnecessary. The engineers should also not be shy to experiment[14] with current manufacturing processes if they are inspired with some creative ideas. Hence, we can formulate a new Sub-system Design principle;

SUB-SYSTEM DESIGN PRINCIPLE 5

After drawing the Processing Flow Diagram, analyze it carefully to avoid any unnecessary processing steps up front in the design process. Also look out for new manufacturing processes that will reduce the number of processing steps required to make the product. If the manufacturing process can not be developed at the current time, make sure it is identified so that future R&D effort can be directed in the right direction.

2.5 The Precedence Diagram (Priority graph) as a Decision Making Tool

The Precedence Diagram[15] (Priority Graph) for the sub-system should be constructed in parallel with the system Processing Flow Diagram. The system Processing Flow Diagram gives a macro view of the value-added processing and testing required to convert the raw material into the finished good. On the other

---

[14] "When there's no experimenting there's no progress. Stop experimenting and you go backward. If anything goes wrong, experiment until you get to the very bottom of the trouble" - Thomas Edison. It is interesting to note the Japanese use of the 5W1H principle is based on the same idea that Thomas Edison wrote a long time earlier.

hand, the Sub-System Precedence Diagram gives a detailed micro view of the processing and testing that is done in each of the sub-systems. The Precedence Diagram is a useful tool for a clear graphical presentation of an assembly or a fabrication task with all the steps as well as their relationships, times and other important characteristics.

The decision about which processing step should be physically done in which sub-system can also be made with the help of the Precedence Diagram and the Processing Flow Diagram for the complete product.

In a Precedence Diagram the processing steps of the sub-system are divided into steps that can be implemented as independent units. The division of these steps is not final neither critical, but should be continuously evaluated during the Sub-system Design process. Once the Precedence Diagram is completed, the relationships or the sequence conditions between the steps should be examined. The engineer should be careful to consider only the technically required sequences and not the previously "common" sequences.

Figure 2.3 shows an example Precedence Diagram for a final assembly sub-system. The diagram only gives the time to carry out the step, the description of the step and shows whether the step was decided to be done manually or automatically. It is recommended in this methodology to expand the scope of the Precedence Diagram by integrating the following parameters into it;

1. Changeover time at each step.

---

[15] Precedence Diagrams are traditionally used in the design of assembly systems but in this methodology they are also used as a design aid for fabrication systems.

2. Number of different component types at each step.
3. Estimate of work content time if the task is done manually, semi-automatically and automatically.
4. Should the step be done manually, semi-automatically or automatically ?
5. Estimated investment cost for each step.
6. Estimated labor cost of each step.
7. All possible failure modes at each step.

Figure 2.4 shows a sample Precedence Diagram with all these parameters integrated into it. The engineer should be aware that information about all these parameters will not be available at this stage of the design process. The Precedence Diagram should be considered a dynamic document that is continuously updated during the Sub-system Design process.

Also a small database can be made to store information about each processing step. This database can be very useful to document all the information and assumptions about the processing steps.

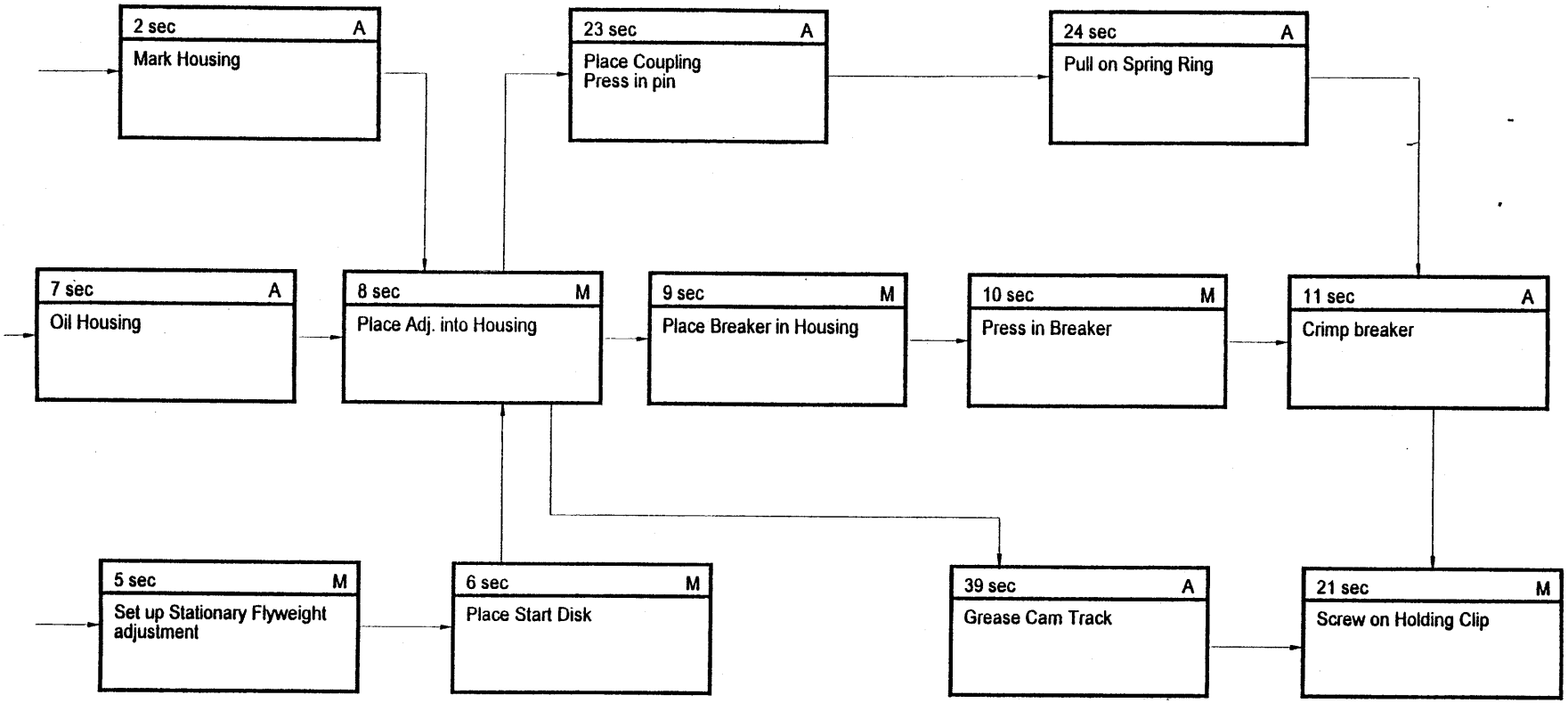

FIGURE 2.3: An Example Precedence Diagram (Priority Graph) for a Final Assembly Sub-system

CHANGEOVER TIME	NUMBER OF COMPONENT TYPES	MANUAL TIME	SEMI-AUTOMATIC TIME	AUTOMATIC TIME	MANUAL, SEMI-AUTOMATIC OR AUTOMATIC	INVESTMENT COST	LABOR COST	FAILURE MODES
10 MIN	4	30 SEC	20 SEC	12 SEC	AUTOMATIC	$ 100,000	$0 PER UNIT	MIXED EV/AV VALVES

STAKE MAGNET VALVES

FIGURE 2.4: An example step of the Integrated Precedence Diagram (Priority Graph)

2.6 Determining the Changeover Time between Products

The changeover time (setup time) between products is a very critical parameter of sub-system performance. Large changeover times make the sub-systems resort to large lot production which inherently means excessive inventory and the waste of overproduction. Therefore a sub-system whose equipment has large changeover times is inflexible (because it can not follow the customer demand closely) and has the two big wastes of overproduction and inventory.

On the other hand, a sub-system which has small or negligible changeover time between products is very responsive to changes in customer demand and does not need to resort to large lot production. This kind of sub-system can follow the customer demand closely and make all the product types in small quantities because the changeover time is very small.

This section only deals with the importance of changeover time to manufacturing and gives a simple model to calculate the changeover time for a sub-system at the initial design stage. The equipment for the sub-systems should then be designed to meet this changeover time. The techniques that can be used to design equipment with small changeover times will be discussed in the Chapter 4 of this methodology[16].

---

[16] For Engineers that are interested to learn how the changeover time can be systematically reduced, an excellent source is the book: A Revolution in Manufacturing, The SMED System, Shigeo Shingo, Productivity Press. This book gives many simple and low cost ideas to reduce the setup times.

It is very important to determine the required changeover time at the design stage of a sub-system (SUB-SYSTEM DESIGN PRINCIPLE 3). This design parameter is often not specified in many Sub-system Design specifications which results in equipment designs that have inherently large changeover times. The engineer must explicitly define the desired time for a changeover and make sure that the equipment vendor or the in-house design team meets this requirement.

Model to Calculate Changeover Time

This model is for a Divided Small Lot Production System in which the all the product types must be made on a daily bases. This means that all the necessary changeovers must be done each day.

In order to calculate the time for one changeover, we use the simple rule that 10% or less of the available production time should be used for changeovers. We can present this idea in the form of a changeover index which has a value of k if it takes k% of available operating time to do all the changeovers. A value between 5 and 10 is very reasonable for an efficient sub-system.

Equation (1) gives the formula to calculate the time to do one changeover;

$$T_c = \frac{C_{index} \times T_o}{100 \times N} \qquad (1)$$

where;

N = number of product types

T_o = operating time per day in minutes

C_{index} = changeover time index [1-10]

T_c = time for one changeover

EXAMPLE 2.2: Changeover time calculation for divided small lot production.

Let us consider a sub-system that is making 6 different products and wants to achieve divided small lot production. In order to find the time to make one changeover with a changeover index value of 10 (that is 10 % of the available operating time will be used for changeovers) we can use equation (1) to give us a value of 22.5 minutes for one changeover.

$$T_c = \frac{C_{index} \times T_o}{100 \times N} = \frac{10 \times 1350}{100 \times 6} = 22.5 \min$$

Equation (1) can easily be used to find the changeover time for shift production by plugging in the time for one shift (450 minutes) in the variable T_o. For shift production, the time for one changeover will be 7.5 minutes for a changeover index value of 10.

2.7 Designing Inspections into the Sub-system

In Chapter 1, we defined inspections as comparison with standards. Strictly speaking, inspections are non-value added steps in the production process but in real life we do need inspections as long as our processing methods have a random nature. Nevertheless, we must design the inspection systems at the lowest possible cost and integrate them into the sub-system in such a way that defects are prevented from going to the upstream processing steps. Figure

2.5a shows the traditional approach to testing and inspection in a production process which results in high rework and scrap percentages. The approach recommended in this section is the one shown in Figure 2.5b. By inspecting the product at each stage of the process and taking corrective action when defects are detected, the production process can be continuously improved and hence scrap and rework can be dramatically reduced. Each processing step is the customer for the processing step before it. Before we establish design rules for inspections, let us define some terms that will help us understand the true nature and purpose of inspections.

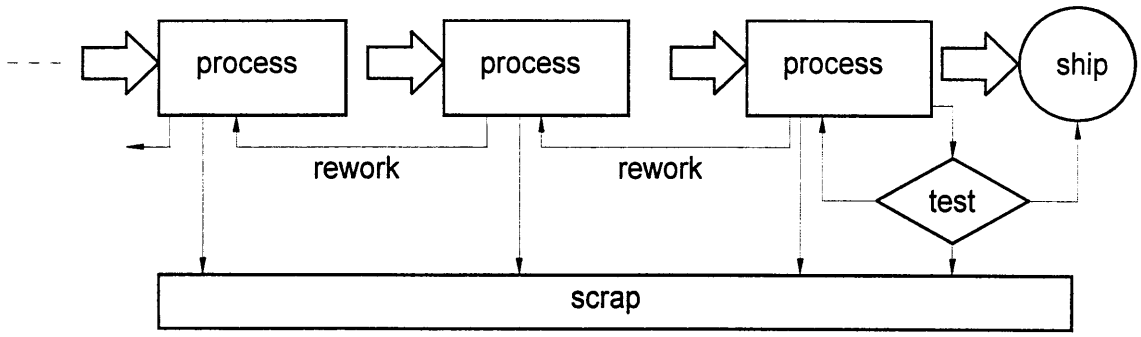

FIGURE 2.5a: The traditional approach to inspection results in excessive rework and scrap.

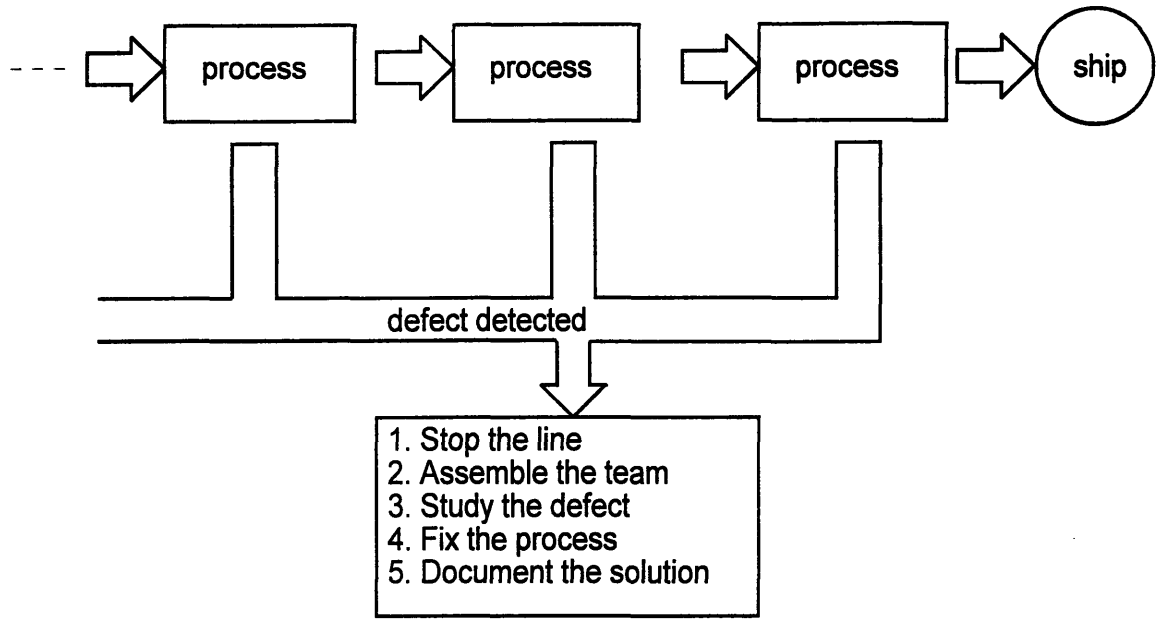

FIGURE 2.5b: The recommended zero defects model of conducting inspections.[17]

2.7.1 Some Important Terms and Definitions[18]

Isolated Defects and Serial Defects

Isolated defects are defects that occur only once. An example of such a defect is an inconsistent unit of raw material.

On the other hand **serial defects** are defects that occur repeatedly. An example of such a defect is a broken tool bit that causes a series of parts without

---

[17] Business Engineering With Object Technology, p 154-155, David A. Taylor. John Wiley & Sons, Inc.

[18] These terms and definitions are adopted from: 'Zero Quality Control: Source Inspection and the Poka-yoke System (p 18-21)'. Shigeo Shingo, 1986 Productivity Press, Portland, Oregon.

holes. Serial defects are caused by a malfunction in the process as opposed to a bad or inconsistent raw material or product.

Theoretically, we can argue that the origination of all defects is a malfunctioning process which usually results in serial defects. This only amplifies the point that in order to produce high quality products a company needs to have high quality manufacturing processes and equipment and enforce high levels of quality control.

Sensory Inspections and Instrument Inspections

Sensory inspections are inspections performed by human senses. The checking of paint quality is a sensory inspection.

Instrument inspections use measuring devices such as calipers, micrometers, etc. Due to improvements in inspection technology more and more sensory inspections are being replaced by instrument inspections. While selecting inspection systems, the engineer must carefully decide which inspections should be carried out using human senses and which using instruments.

Subjective Inspections and Objective Inspections

Subjective inspections are made by the same person who did the processing. For example, a person who drilled a hole on a drill press himself measures the size of the hole with a plug gage.

Objective inspections are made by other than the person who performed the work. Objective inspections have reduced operator bias as the operator is not inspecting his/her own work.

Process-Internal Inspections, Process-External Inspections and Source Inspections

Process-Internal inspections are inspections done within the process step the work was carried out.

Process-External inspections are carried out at a down stream process step. Process-Internal inspections are better than Process-External inspections because they provide immediate feedback that can be used to correct the process.

Source inspections are even one level higher than Process-Internal inspections because they prevent errors from becoming defects. An example of a source inspection is a poka-yoke feature in an assembly tool that prevents the assembly of spring clips to be done with the incorrect orientation. Source inspections eliminate the source of defects.

Statistical Inspections and Non-statistical Inspections

If samples are chosen according to the statistical theory, then the inspections are **statistical**, otherwise they are **non-statistical**.

Feedback and Action

Feedback is the information about a bad part or a malfunctioning process that is generated and communicated to the team responsible for the process that produced the bad part.

Action is the corrective countermeasure that follows feedback. Feedback without action has no value and is a mere waste of resources. Feedback or conducting more inspections will only identify defects but will never reduce them. We can formulate this as a Sub-system Design principle;

SUB-SYSTEM DESIGN PRINCIPLE 6

Action must follow feedback in order to reduce the number of defects. The true purpose of action is to identify the source of the problem and eliminate it. While designing inspection systems ensure that action is part of the inspection process.

Variable Measurement and Range Measurement

Variable measurement is to measure the exact value of a parameter. An example of such a measurement is to measure the diameter of a hole with a pair of Vernier calipers.

On the other hand **range measurement** is to determine if the value of a parameter falls within a certain range. For example, checking if a hole is of the correct dimension with a Go No-go gage is a range measurement. Range measurements can be very useful in cellular manufacturing because they can be done faster, have no operator bias and can be more easily automated as

compared to variable measurements. SQC is not possible with range measurements.

Informative Inspections and Judgment Inspections

Informative inspections are inspections that are followed by action. For example, if a broken drill bit is being detected in a machine and the machine is stopped when this happens, then the inspection will be informative in nature.

Judgment inspections on the other hand only tell us how many bad parts we made and they are not followed by immediate action. They only tell us how many defects we are making each day. Increasing the amount of judgment inspections does not reduce defects, it only increases the probability of catching a defect.

Quantity Inspections and Quality Inspections

Quantity inspections check to see if the right amount of parts were produced. An example of such an inspection is to count the parts being shipped to the customer. Quantity inspections are a mere waste of resources. Instead of conducting quantity inspections after the part has been produced, the production should be controlled to make the right amount of parts in the first place.

Quality inspections make sure that the part is of the desired quality.

Poka-yoke

Poka-yoke is a mistake-proofing device that warns or stops the worker or the machine from making mistakes, thus eliminating defects.The use of poka-

yokes can dramatically reduce defects in a process. Poka-yokes help us achieve 100% inspections at a low cost[19]. 100% inspections are very desirable if they can be achieved at a low cost by designing and implementing poka-yokes.

2.7.2 Design of Inspection Systems

Inspection systems must be designed so that they make sure that the desired quality and quantity of parts are produced. Since inspections are themselves non-value added, the cost of the inspection system must be as low as possible. The inspection system that accomplishes its task at the lowest possible cost is desired. In this section design rules are developed to design low cost inspection systems.

Let us consider a four step process shown in Figure 2.6. Process element 1 consists of slot milling, Process element 2 is drilling, Process element 3 is reaming and Process element 4 is de-burring. Now if our task is to develop inspections that make sure that the Process shown in Figure 2.6 produces parts of specified quality, we must design the right kind of inspection methods and locate them within the four process element steps so that scrap and rework are eliminated.

In order to minimize scrap and rework we must consider the next processing step as the customer for the step before it. This can be formulated into the seventh Sub-system design principle;

---

[19] An excellent book on source inspections and poka-yokes is: 'Zero Quality Control: Source Inspection and the Poka-yoke System'. Shigeo Shingo, 1986 Productivity Press, Portland, Oregon.

SUB-SYSTEM DESIGN PRINCIPLE 7

While designing inspections for the sub-system, consider the next step as the customer (NSAC) for the previous processing step. The inspections must be designed so that they prevent defects from reaching the next processing step.

Based on this Sub-system Design principle a simple five step guideline is presented to smartly design cost effective inspections. The production process shown in Figure 2.6 will be used as an example to explain this guideline in Example 2.3.

Inspection System Design Guideline

Step 1: Analyze the final Integrated Precedence Diagram (Priority Graph) for the product and determine what inspections are required given that we do not want any defects to reach the next processing step.

Step 2: Determine how the inspections will be carried out and what kind of method suits each of the necessary inspections identified in step 1. Inspections in order of preference are Source, Process-internal and Process-external.

Step 3: Design concepts for creative and low cost devices and methods to accomplish the inspection task. Also design masters for the inspection systems and determine the frequency of checking the inspection system with the master.

Step 4: Check to see if all the necessary inspections are identified and concepts designed for them. Also analyze each inspection to see if it is of the informative type. Any judgment inspection must then be converted into an informative type by redesigning the method or device concept.

Step 5: Review the inspection device and method concepts to see if the time for feedback and action can be further reduced. Define detailed action when a defect is detected.

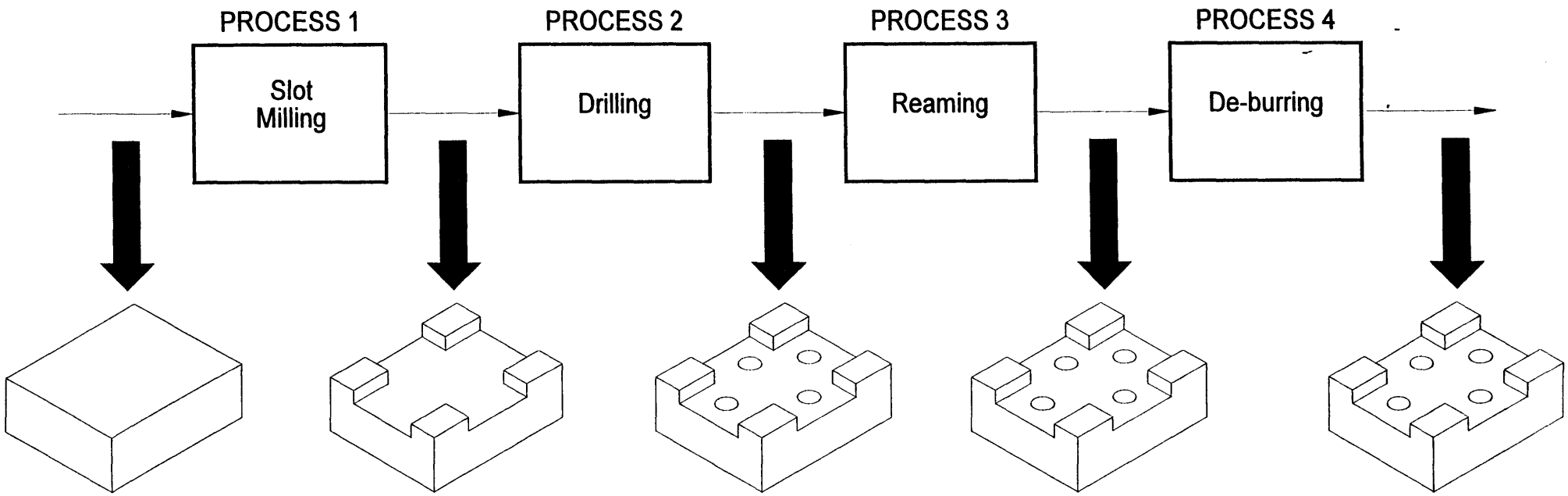

FIGURE 2.6: A four element production process.

EXAMPLE 2.3: Design of inspections for the production process shown in Figure 2.6.

Step 1: Determine required inspections

The data about required inspections should be collected in the form of a spreadsheet. The spreadsheet for our example process of Figure 2.6 is shown in Table 2.7.

No	Process No	Process Description	Required Inspection	Sensory /Instrument
1	1	Mill slots in Aluminum housing	Measure planar dimensions of slots	Instrument
2	1	"	Measure depth of slot	Instrument
3	2	Drill holes with a formed drill	Measure location of holes	Instrument
4	2	"	Measure diameter of holes	Instrument
5	2	"	Check for burr size	Sensory
6	3	Ream holes	Measure final hole diameter	Instrument
7	4	De-burr holes and slot edges	Check for any left burrs	Sensory

TABLE 2.7: Spreadsheet of required inspections for the example process.

Step 2: Determine methods of inspections

After we have determined, what inspections are required at each stage of the production process, we need to determine how these inspections will be carried out. For this we need to make another matrix called the Inspection Method Matrix. The Inspection Method Matrix for the first three inspections of our example process is shown in Table 2.8.

Inspection No	Automated/ Objective Manual/ Subjective Manual	Source/ Process-Internal/ Process-External	Variable Measurement/ Range Measurement	Frequency of Measurement
1	Subjective Manual	Process-Internal	Range	1/5
Reason	Production volume does not justify the cost of automated inspections.	Sources inspection would require tool monitoring which is not feasible for the production volume.	Process is very stable and there is no need for SPC which requires Variable measurement.	The wear on the tool is slow enough to be detected with this frequency. Tool breakage is highly unlikely.
2	Subjective manual	Process-Internal	Range	1/5
Reason	"same as 1"	"same as 1"	"same as 1"	"same as 1"
3	Automated	Source	Range	1/1
Reason	Inspection can be automated at a low cost.	The drilling fixture can be designed with hardened bushings so that source inspections can easily be carried out.	Range measurement because it facilitates inexpensive automation	100% inspection.

TABLE 2.8: The Inspection Method Matrix for the first three inspections of the example process.

Step 3: Design concepts and masters.

Once the inspection method has been identified in the Inspection Method Matrix, systems level concepts should be generated for the inspection devices. In this example we assume that these concepts are generated for all the required inspections, therefore we move on to step 4 to identify the final inspections.

Step 4: Identify inspections as judgment or informative and convert all judgment inspections to informative inspections.

After generating the concepts for the required inspections, we must identify them and make sure that they are all informative inspections. Table 2.9 shows (hypothetically) which of the seven inspections are of the judgment or the informative type.

Inspection No	Judgment/Informative Inspection
1	Informative
2	Informative
3	Informative
4	Informative
5	Informative
6	Informative
7	Judgment

TABLE 2.9: Identification (hypothetical) of designed inspection procedures and devices.

From Table 2.9 we can see that inspection number seven, which is to check for any left burrs (see Table 2.7) is of the judgment type. This means that the method of our inspection must be such that either there is no feedback given to Process 4 (de-burring) or there is no corrective action after the feedback, when a defect is detected. Since informative inspections are necessary to reduce the number of defects and improve the process continuously by eliminating all sources of errors, we can formulate this into a Sub-system Design principle;

SUB-SYSTEM DESIGN PRINCIPLE 8

All the inspections carried out in the sub-system *must* be of the informative type. That is, the inspection should give quick feedback in time to take corrective action to bring the process under control.

Step 5: Reduce feedback time and define action.

In step 5 of the inspection design process, we analyze all the seven inspections to see if any of them has a large feedback time. If this is the case then this feedback time should be reduced to an acceptable level. Also, the action that will follow the feedback in case of a detection of a defect, is clearly defined to ensure that there is no ambiguity in the action.

2.8 Designing the Layout of the Sub-system

The layout of the sub-system has a great impact on the utilization of machines and workers. The sub-system should have a layout that minimizes the waste of;

1. Unnecessary transportation,
2. Unnecessary movement (or motion) of people,
3. Waiting by employees for equipment to finish its work or for upstream activity, and
4. Inventories of goods awaiting further processing.

In order to minimize these wastes, the layout should be such that all the processing steps are placed close to each other. Ideally, we would like single pieces to flow between processes as it minimizes Lead time and improves the responsiveness of the sub-system to fluctuating demand. In some cases single piece flow is difficult to achieve because of the manufacturing process (for example, heat treating a part in a furnace that takes 2 hours) itself is only feasible to produce parts in batches. If this is the case, then the engineer should try to make parts in the smallest batch size or modify the product so that a non-batch manufacturing process can be used to produce it. Chapter 3 discusses the impact of the manufacturing process on the batch size.

Besides designing the layout to minimize the four wastes, it must also be designed to be volume flexible for certain production quantities. Let us consider a six work station assembly cell as an example to see what benefits can be gained by making the layout in such a way that workers can easily move

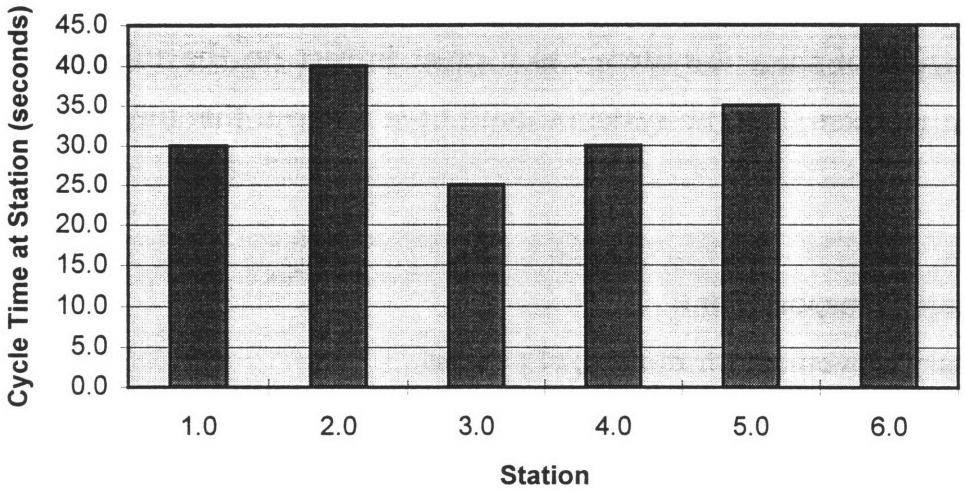

FIGURE 2.7: Cycle times of a six work station (hypothetical) Assembly Cell.

between the work stations. The cycle times for the six stations are shown in Figure 2.7 and the layout of the assembly cell is shown in Figure 2.8. Case 1 in Figure 2.8 shows the cell being operated by six workers, one at each station. In this case the production output of the cell is 80 pieces/hr and worker utilization is 75.9 %. The production output is controlled by the slowest station, in this case the bottleneck is station 6 with a cycle time of 45 seconds. The low value of utilization is because of the imbalance in the station cycle times. From Figure 2.7 we can easily see that the worker at station 1 is only working 66.7 % of the time. Similarly workers at stations 2-5 are underutilized while the worker at station 6 is 100% utilized. Case 2 shows 5 workers working in the cell moving from station to station (in the form of a rabbit chase). Case 3-6 show the cell with decreasing number of workers in Figure 2.8 and 2.9. Table 2.10 gives the production data for these six cases. The calculation in the table is based on the assumption that the time to move between stations is negligible. If the cell is designed carefully,

then in almost all cases the time saved in double handling is approximately the same as the time lost in worker travel (hence the assumption is valid).

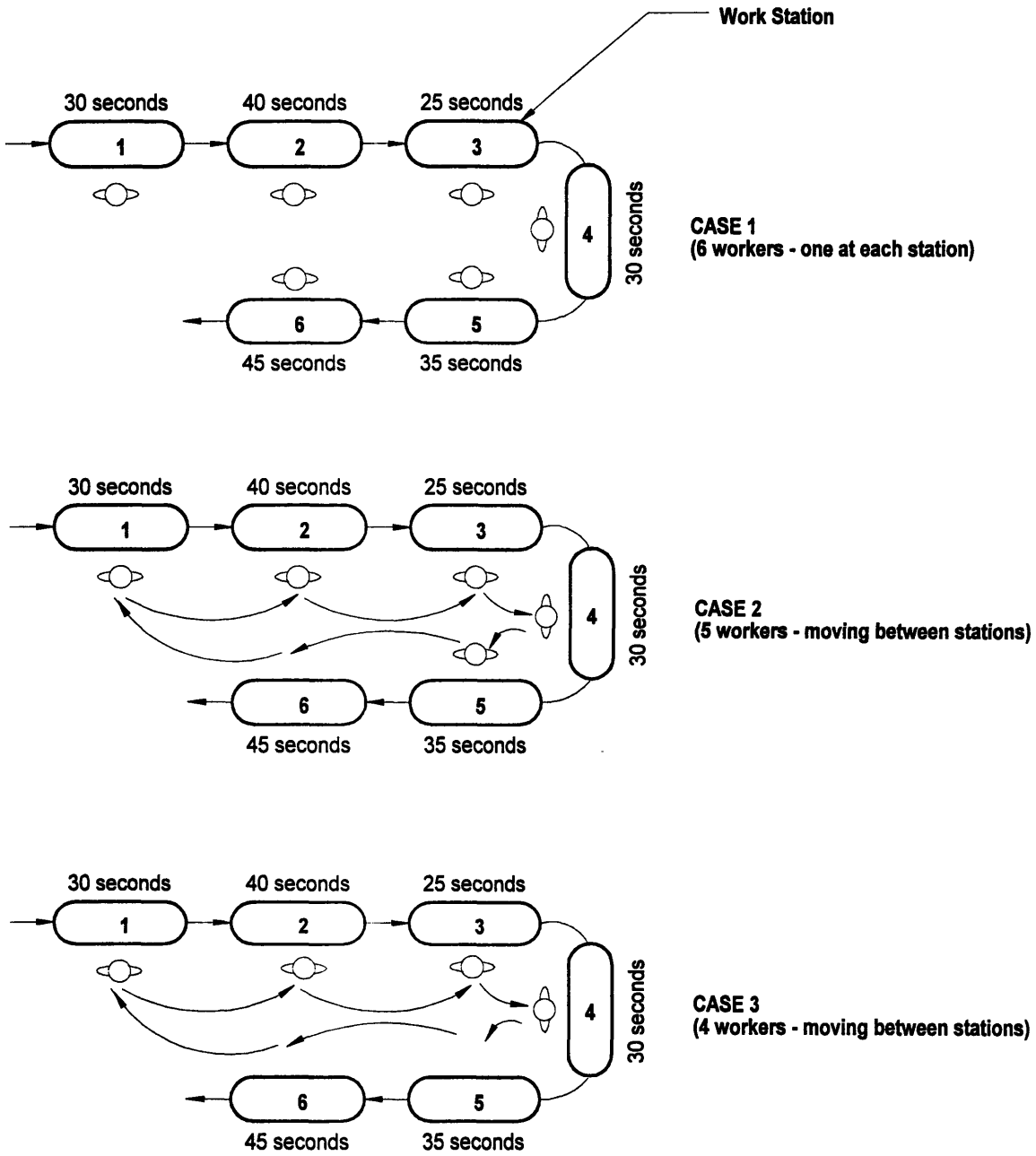

FIGURE 2.8: Case (1-3) of a volume flexible layout in which workers follow each other (rabbit chase) when demand goes down.

It can be seen from Table 2.10 that enormous volume flexibility is achieved by making the workers move between stations. Figure 2.10 shows the production volume against the number of workers running the cell.

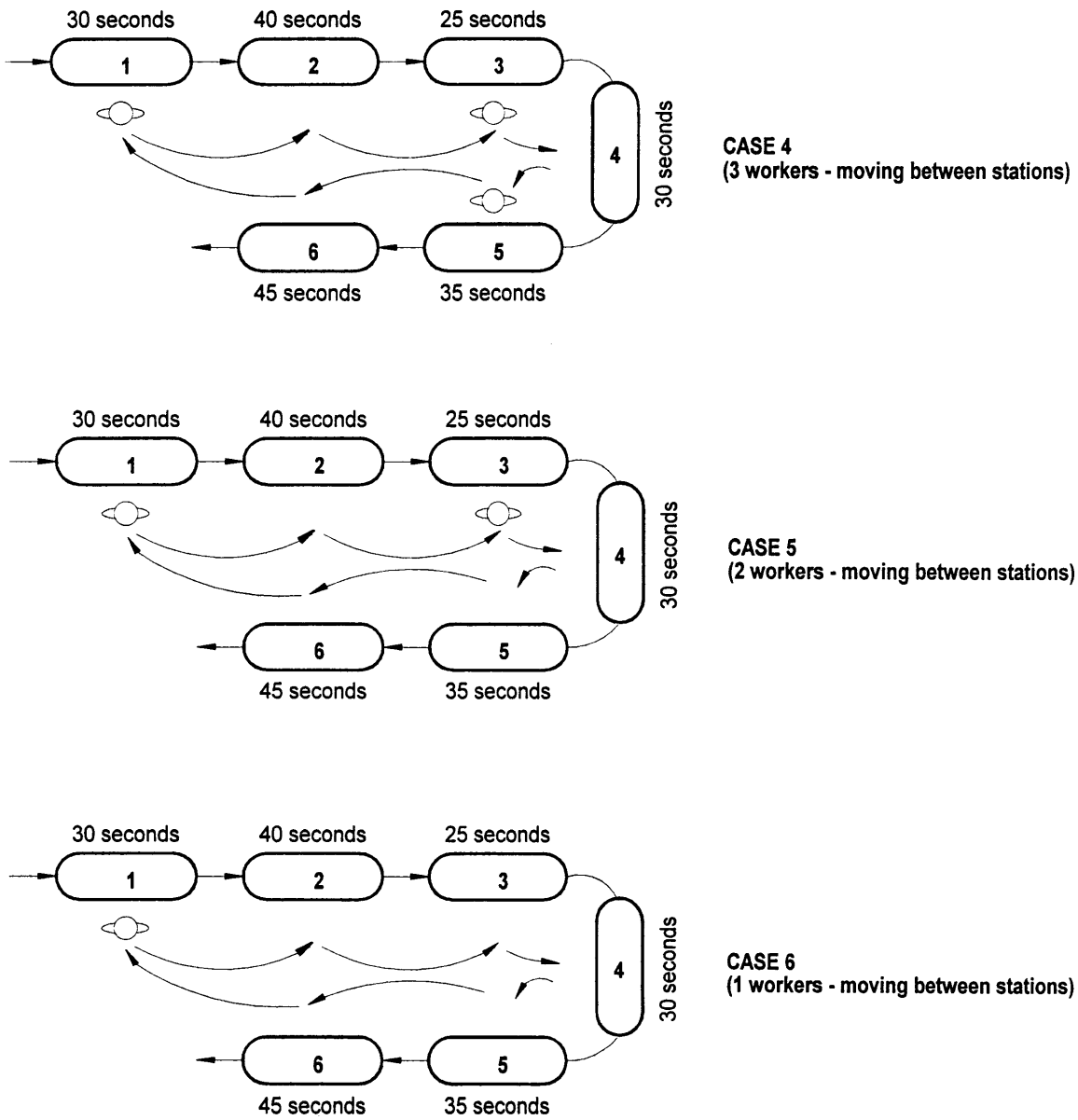

FIGURE 2.9: Case (4-6) of a volume flexible layout in which workers follow each other.

It is interesting to note that the production rate is the same in Cases 5 and 6. This shows that the movement of workers within the cell can level the imbalance in cycle times within a certain limit.

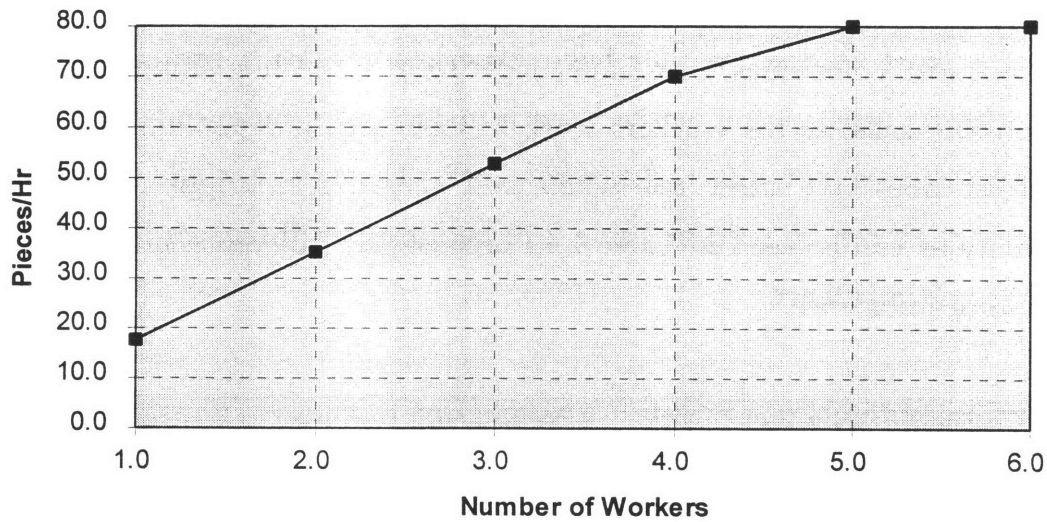

FIGURE 2.10: Production rate against the number of workers manning the cell.

Volume flexibility is a very important characteristic of a sub-system (cell). The shape of the layout will vary from one production situation to another but the underlying idea behind a good layout is to place the processing stations closer to each other so that operator travel distances are minimized. If the workers are fixed to stations then the cell will not be efficient at low production rates as the workers will be underutilized. In order to meet a varying demand efficiently the number of workers must be reduced in the case of a lower demand. This is only feasible if the workers are not tied to the stations and are multifunctional (can operate different machines). The removed workers can be used as resources to do kaizen (continuously improve the cell by removing the wastes of production and hence reduce the cycle times at stations).

A U-shaped layout provides short travel distances between machines and is very efficient for manual fabrication and assembly sub-systems. It must be kept in mind that a U-shaped cell does not give any benefit if the workers are tied to the stations. Figure 2.11 shows Case 7 and 8 of the six station assembly cell (U-shaped) in which workers are working in loops rather than following each other (in the form of a rabbit chase). Working in loops is preferred over the rabbit chase (by most companies that have experimented with making U-shaped manufacturing cells) as the workers work in their own independent areas and one worker does not effect the whole cell. There is a slight decrease in productivity as can be seen in Table 2.10 because the difference in loop times leads to some imbalance.

Case	Worker(s)	Cycle Time (seconds)	Pc/Hr	Pc/Worker/Hr	Worker Utilization	Productivity Increase	Production Flexibility
1	6.0	45.0	80.0	13.3	75.9%	(Base)0%	(Base)100%
2	5.0	45.0	80.0	16.0	91.1%	20%	100%
3	4.0	51.3	70.2	17.6	100.0%	32%	88%
4	3.0	68.3	52.7	17.6	100.0%	32%	66%
5	2.0	102.5	35.1	17.6	100.0%	32%	44%
6	1.0	205.0	17.6	17.6	100.0%	32%	22%
7	3.0	80.0	45.0	15.0	85.4%	13%	56%
8	2.0	115.0	31.3	15.7	89.1%	17%	39%

TABLE 2.10: Production data for the Cases (1-8) of the six station assembly cell with multifunctional workers.

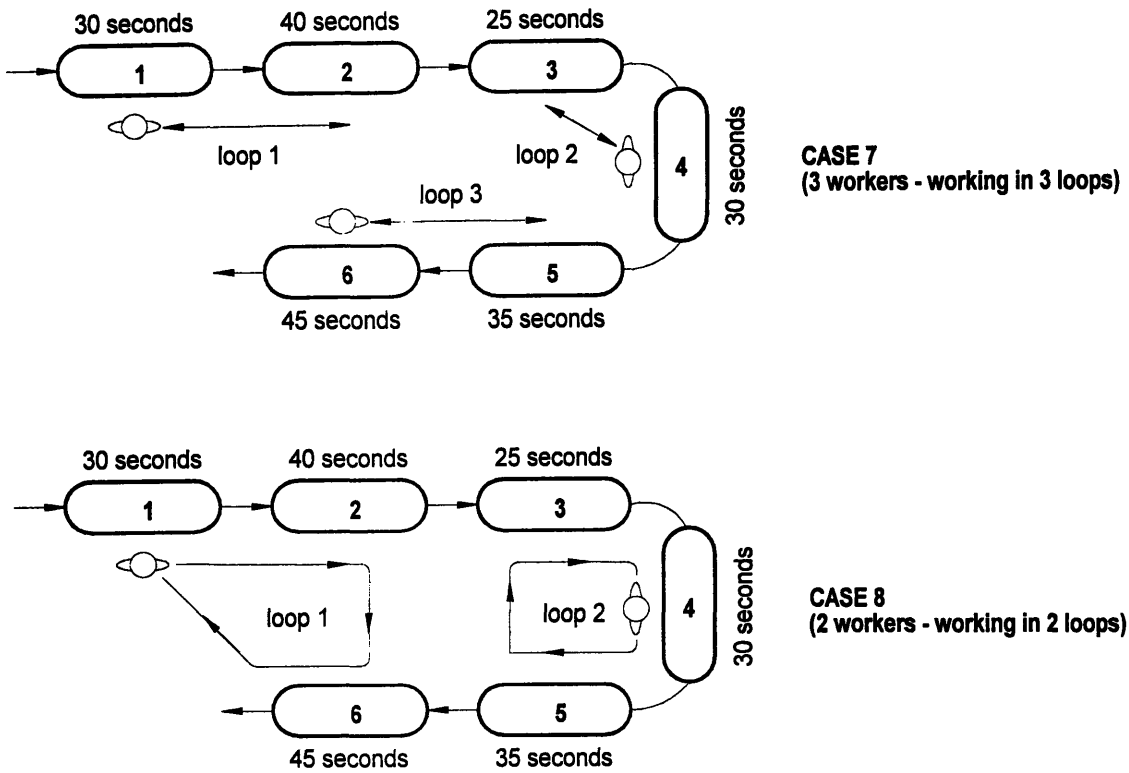

FIGURE 2.11: Case (7-8) of a volume flexible layout in which workers work in loops rather than following each other.

The layout of a sub-system is very critical for the efficient operation of the sub-system. Example 2.4 discusses the design of a manufacturing cell with a very flexible layout. The manufacturing cell in Figure 2.12 is designed around a 5 feet by 50 feet long raised platform (1 foot high) on which workers move in loops. The machines are placed around this platform on casters so that they can be easily reconfigured.

EXAMPLE 2.4: A volume flexible manufacturing cell.

Figure 2.12 shows the layout of a bar rack manufacturing cell that is build around the idea of achieving volume flexibility. The cell shown in Figure 2.12

produces a part called a bar rack. The part requires slot milling, drilling, teeth milling, deep hole drilling, grinding, broaching, and other operations like inspection, heat treating and mechanical straightening to finish the part. A total of 26 steps are required to complete the part. The most important point about this cell is that all the processing steps required to transform the raw cylindrical stock into a finished bar rack, ready for subassembly, are carried out in the cell. This cell (sub-system) is more efficient than the traditional functional layout sub-system shown in Figure 2.14a. Also, most of the material handling in the cell is done by the operators as they load machines, unload machines and take the processed part to the next machine. The fact that all the processing is done in one place very close to each other results in the following benefits;

1. Shorter lead times.
2. Easy synchronization of all processing equipment.
3. Easier to pinpoint and eliminate processing problems. ***Defects*** in products are hence reduced.
4. Tremendous reduction of ***transportation*** waste and manual handling of semi-processed parts eliminates investment into palletized conveyors.
5. Reduction of unnecessary ***inventories***.
6. No ***waiting*** by workers in the cell. Workers are 100% utilized. Also lot delay is eliminated as parts flow smoothly from one processing machine to the other.
7. No unnecessary ***movement*** by workers. Worker motions are inline with the motion of the part.

Production is easier to control as all the processing steps are in one place. ***Overproduction*** is completely avoided.

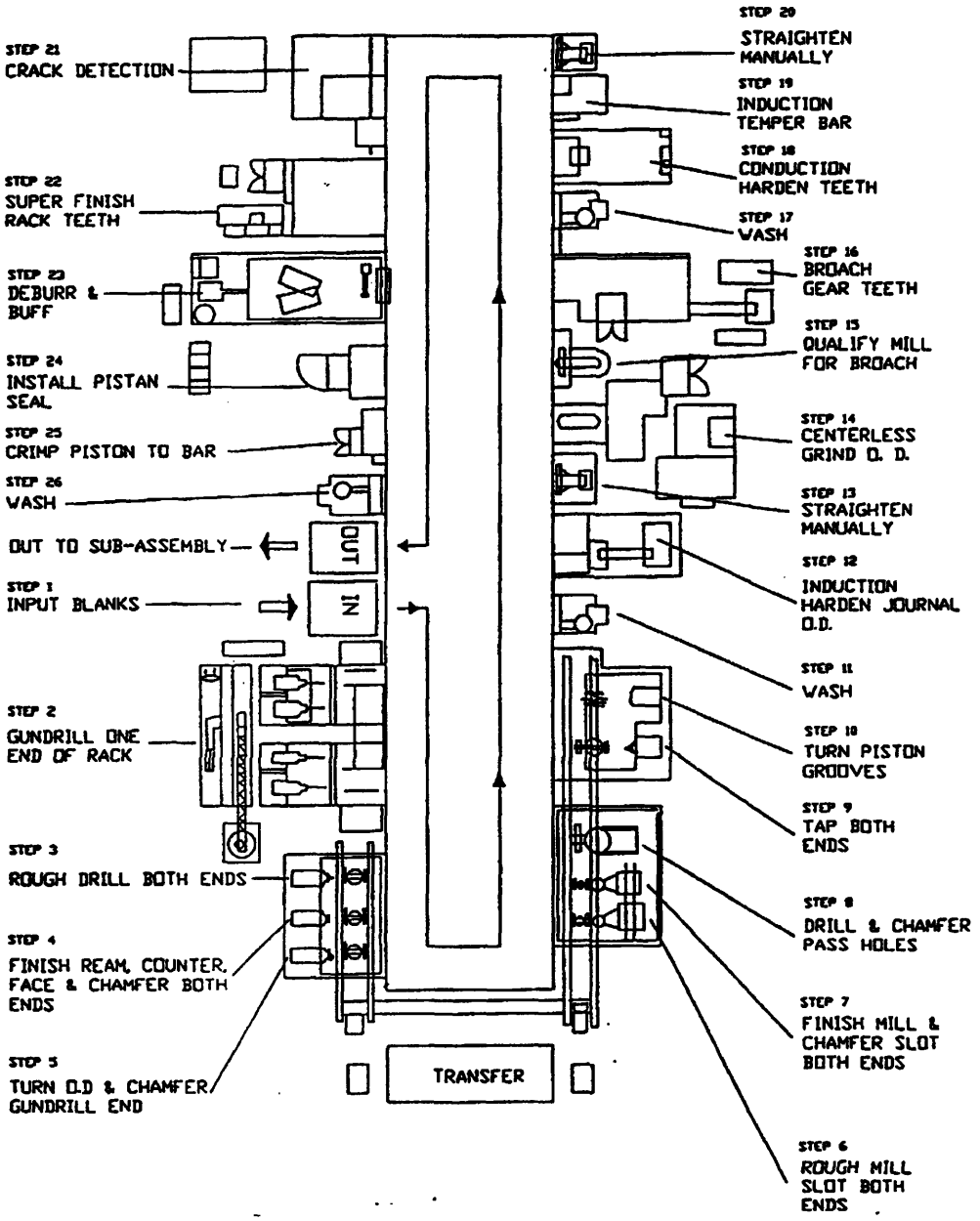

FIGURE 2.12: Layout of a bar rack manufacturing cell[20].

[20] Lean Manufacturing Systems, J T Black

Apart from the eight benefits listed above, the cell is designed on the principle of achieving ***volume flexibility***. The standard operations sheet for the cell is shown in Figure 2.13. In the case shown in Figure 2.13 the cell is manned with two workers. The cycle time is 1 minute. In order to decrease the cycle time, the workers can be increased to three or four. With four workers, the cycle time is determined by the slowest machine and there is some operator waiting. To increase the cycle time in case of a decrease in demand the cell can operate with only one worker.

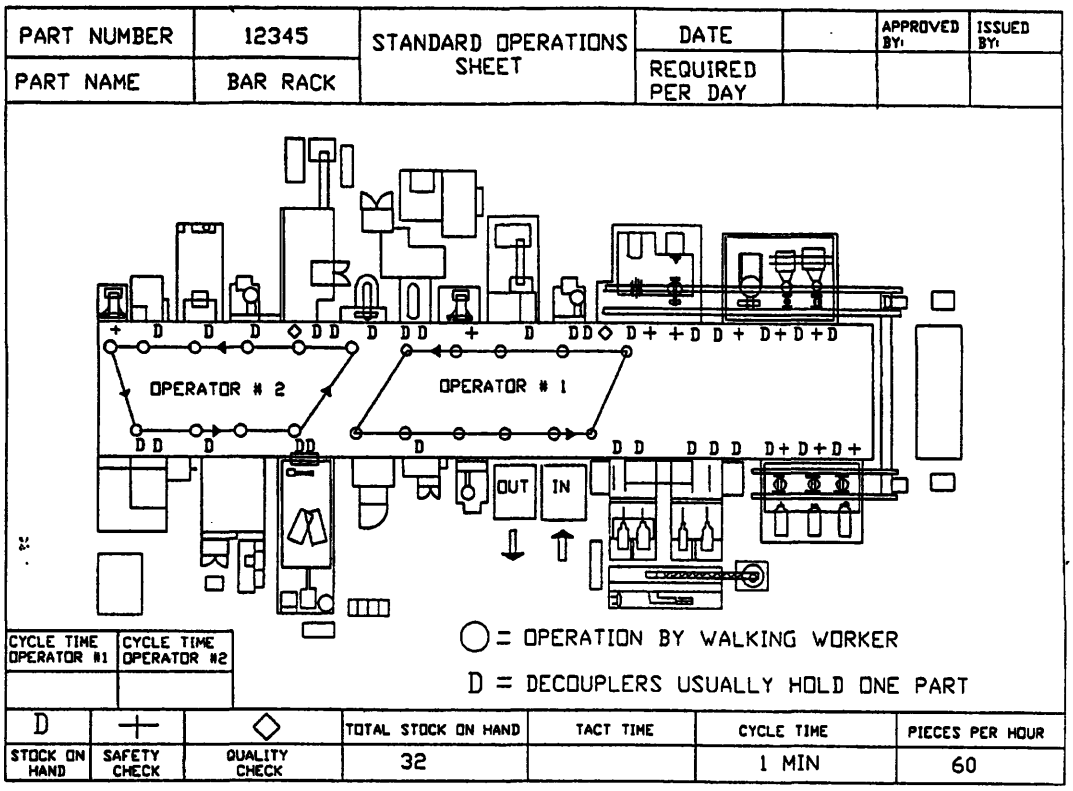

FIGURE 2.13: Standard operations sheet for the bar rack manufacturing cell[21].

[21] Lean Manufacturing Systems, J T Black

Six of the eight benefits are directly related to eliminating the seven wastes of production. The seventh waste of production, unnecessary ***processing*** is continuously eliminated by reevaluating and redesigning the manufacturing processes.

The design of the equipment for the manufacturing cell (sub-system) will be discussed in detail in Chapter 4. This cell was custom designed for the bar rack. Some of the machine tools were standard off the shelf products modified to meet the requirements of the cell, and some were custom build.

In order to make a customized manufacturing cell, the manufacturing engineers must have machine design as well as system design skills or the team that designs the cell should include machine designers. The machine designers are required to design new machines or modify existing off the shelf equipment.

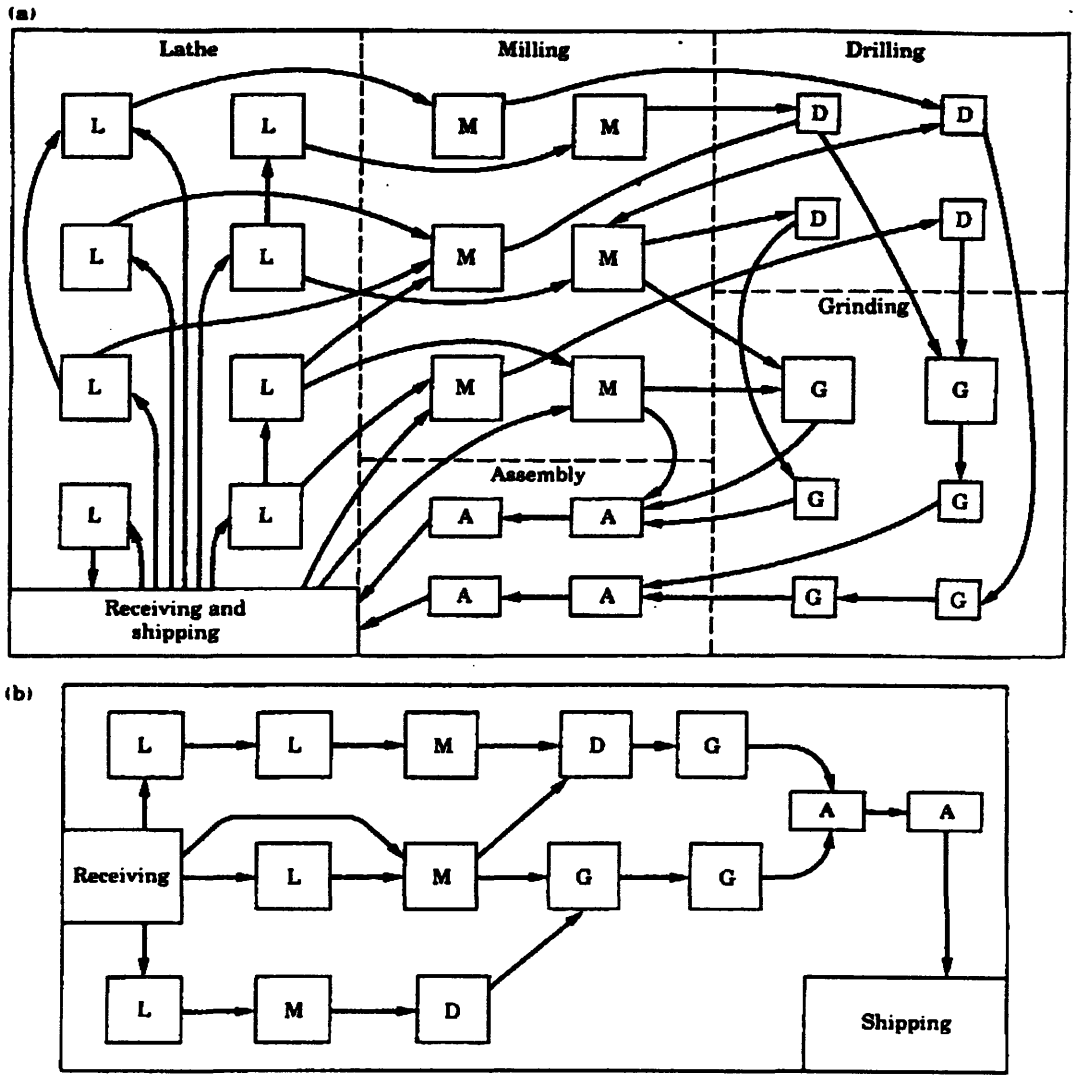

FIGURE 2.14: (a) A functional layout in which similar machines are grouped together, (b) a cellular layout in which machines are placed next to each other in the order of the processing steps. (Source: M P Groover).

Also the manufacturing cell shown in Figure 2.12 can make seven different types of the bar rack for the same model of the product. The changeovers time is small as the machines were designed for specified changeover times. So the cell has ***product type (mix) flexibility***.

The cell also has ***future model flexibility*** as the machines are placed on casters and can be easily moved to another location or replaced by other machines. The layout of the cell is very fluid in nature as it is not dictated by a fixed conveyor. Because of this, it is easy to modify the cell to introduce model changes in the product.

This example showed that manufacturing cells (both fabrication and assembly) are the heart of the Lean Production System as they facilitate eliminating the seven production wastes and help in achieving the three types of desired flexibility.

SUB-SYSTEM DESIGN PRINCIPLE 9

The layout of the sub-system must minimize transportation of product(s) within processing steps, inventory within the sub-system, movement (and motions) of workers and waiting by workers. Also, the layout should be fluid in nature allowing easy reconfiguration of equipment.

2.8.1 Layout Design Guideline

In this section, a simple four step guideline is presented to design to the layout of the sub-system.

Step 1: Design layout concepts for the sub-system based on Sub-system Design Principle 9.

Step 2: Choose the best concept. Integrate into this concept the good design features of the other concepts.

Step 3: Build an exact physical model of the sub-system (with Legos). Determine how material is going to flow from one processing step to the next and how information will trigger production[22].

Step 4: Carefully analyze the final layout concept, reduce unnecessary transportation of parts[23] and movement of workers.

2.9 Sub-system Design Guideline

In this section, the ideas discussed in the previous sections are summarized into a fourteen step sub-system design guideline. The fourteen steps are;

1. Generate the customer demand curves for the product types. These curves should be generated for as long a period as the demand information is given by the customer.

2. Determine and negotiate the delivery schedule with the customers. That is, determine the frequency of deliveries and the days the product is to be delivered.

---

[22] Enormous insight into the functioning of the sub-system can be gained be making an exact physical model of the sub-system and then running a simulation for a couple of production days.
[23] If one million parts are made and each part travels a distance of only one unnecessary meter, that is equal to 1000km of unnecessary transport and effort.

3. Determine how the production scheduling will be done, how often and by what means will the production information be communicated with the sub-systems and the suppliers. One option is to plan in four stages as shown in Table 2.11.

Production Plan	Purpose
Yearly Production Plan	Set Sub-system capacity.
Monthly Production Plan	Prepare and reconfigure Sub-system for the next month.
Ten Day Production Plan	Change the production quantity during the month if the customer demand changes, making the Sub-system responsive to volume changes.
Daily Production Plan	This is the only plan that is deterministic in nature and determines the exact daily quantity that is to be produced.

TABLE 2.11: Planning in Four Stages.

4. Select a production approach that best meets the customer demand and delivery schedules. Four production approaches in order of preference are:

a) Mixed Production.

b) Divided Small Lot Production.

c) Leveled Production.

d) Large Lot Production (must not be considered as a design option).

5. The shift production is a good compromise between the mixed production and the divided small lot production and could be considered as a design option.

6. Draw the complete Processing Flow Diagram for all the product types. Eliminate all unnecessary processing steps.

7. Group the Processing steps into sub-systems based on constraints imposed by the product and the manufacturing processes.

8. Generate the complete Integrated Precedence Diagram (Priority graph) for the sub-system to be designed. The Precedence Diagram is a design tool that shows the precedence of the processing steps in a detailed manner.

9. Determine if the changeovers are important to your sub-system. In most cases the changeovers will be very important and therefore fast changeovers must be designed into the sub-system. Calculate the time to make one changeover, based on 10% (changeover index) or less of the daily available production time being used for all changeovers.

10. Based on the changeover time, variation in product types, and the precedence diagram, decide how many sub-systems should be designed. For instance, if some of the product types are very different and have large changeover times between them, the designer might consider designing two separate sub-systems.

11. Determine where the inspections should be done and how much inspection should be done within the sub-system. Decide the inspection systems based on the Next Step As Customer (NSAC) principle. Make sure all inspections are of the informative type with quick feedback and action.

12. Generate concepts for the Layout of the sub-system based on the design objectives of volume flexibility and minimization of *inventory*, *transportation*,

unnecessary *movement* of people and *waiting* by employees and equipment. Product Flow layout is better than Functional layout (Figure 2.13a) as the former minimizes the Lead time and other kinds of hidden wastes.

13. Choose the best layout concept. Also try to integrate into the chosen concept, good design features of the other two concepts. While choosing a layout concept, some of the parameters that were determined in steps 1 through 10 might have to be reevaluated.

14. Once the layout concept is frozen, update the integrated precedence diagram and all the specification documents associated with it. The integrated precedence diagram can then be given to the equipment vendor to design the equipment according to the generated sub-system requirements.

Chapter 3
MANUFACTURING PROCESS SELECTION

3.1 Challenges of Manufacturing Process Selection

The manufacturing processes to produce all the sub-components of the product should be designed and selected concurrently with the sub-system design activities that were described in Chapter 2. Figure 3.1 shows the timing of sub-system design, manufacturing process selection and equipment design activities.

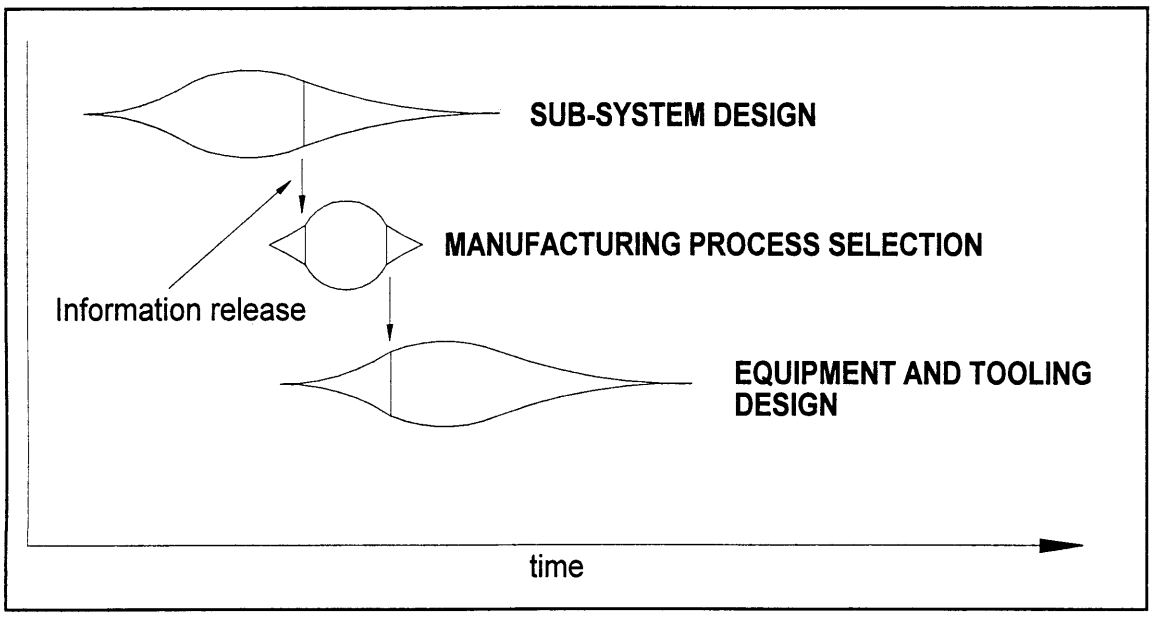

FIGURE 3.1: The timing of sub-system design, manufacturing process selection and equipment and tooling design activities[24].

[24]Adapted from: Whitney Dan SIB 17(3), 1992.

During the manufacturing process selection activity, we select the right manufacturing process for each of the processing steps identified in the processing flow diagram of the product. The manufacturing processes should be selected and evaluated while the sub-system is being designed. The information (specifications) generated during sub-system design is used to select the right manufacturing process that fits the requirements of the sub-system. Also feedback is given to the sub-system designers as soon as the process is selected so that they can proceed with equipment and tooling design.

Selecting the right manufacturing process is a challenge for a company and following are some of the difficulties that might be encountered during the selection processes;

1. The exact volume of the product to be produced is unknown at the early design stage.
2. The company might have technical know-how and experience in only limited types of manufacturing processes.
3. The decision itself is often made in a limited amount of time (in order to enter the market before the competition) which does not allow time for mathematical modeling and detailed cost analysis of competing manufacturing processes.
4. The company is not willing to try new manufacturing processes and just considers existing manufacturing capabilities as viable options.
5. The decision is influenced by the initial investment cost of the process and does not consider the variable costs and long term usability of the processing equipment. For example, a general purpose flexible processing equipment might cost more but can be used to process the future models of the product.

6. Different manufacturing processes give different quality products. That is, competing manufacturing processes have inherently different characteristics which result in products having different quality levels.

Despite all these difficulties, simple back of the envelop calculations can save the company a lot money. Estimates about *fixed* and *variable* costs are very useful at the early sub-system design stage when different processes are being considered and compared with each other.

Fixed costs are incurred once and are independent of the number of units of product that will be manufactured. For example, purchasing a tombstone fixture for a machining center is a fixed cost. Whether 100 or 10,000 units are produced, the fixed cost does not change. It is important that when fixed costs are being determined, ranges of production quantities and time horizons are clearly specified.

Variable costs are proportional to the number of units produced. For example, the cost of raw materials is proportional to the number of units produced and is considered a variable cost. Labor costs and energy cost associated with the process are also considered variable. For consumable or wearable tooling, the number of parts produced per tool must be specified.

EXAMPLE 3.1: Comparison of two manufacturing processes.

Figure 3.2 shows the total cost as a function of the number of parts produced for machining and near net forging process used to make a hypothetical flange. It is assumed that the company has the forging press and the machining center already in-house so their costs are not considered. The fixture

cost for the machining center is considered as the fixed cost for the machining process and the cost for making the progressive dies for the forging press is considered as the fixed cost for the forging process.

Table 3.1 gives the data for the two manufacturing processes.

Costs	Machining	Forging
Fixed	$1,000	$10,000
Variable (Materials and Labor)	$10.00 per unit	$1.00 per unit

TABLE 3.1: Fixed and variable costs for a hypothetical part.

It can be seen from Figure 3.2 that the machining process is more profitable below 1,000 units whereas the forging process is more profitable for volumes greater than 1,000. The variable cost of forging is low because of the saving in raw material and because only unskilled labor is required to run the presses once the die is setup.

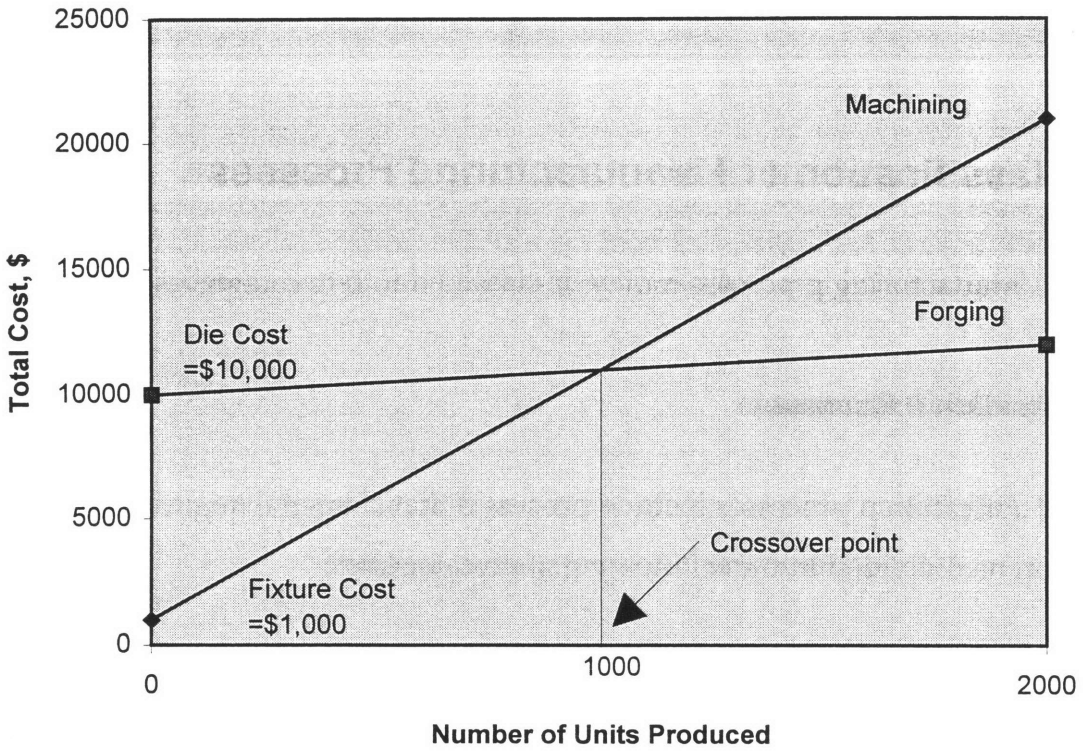

FIGURE 3.2: Cost comparison for machining and near net forging process for a hypothetical part, flange[25].

From Example 3.1, it is clear that the production range of the product to be manufactured is the key factor in determining which manufacturing process will be most profitable. Furthermore the decision to choose a manufacturing process should be considered dynamic. If the volume changes or a better process

---

[25] Figure modified from: Product Design and Development p. 194, K. T. Ulrich and S. D. Eppinger, 1995.

is invented, the engineer should not hesitate to switch over to another process if the total production costs are reduced.

3.2 Classification of Manufacturing Processes

Manufacturing processes may be classified into two categories;

1. Fabrication Processes

Fabrication processes include processes that change the quality of the part. They can be divided into the following main categories;

a) Casting, foundry, or molding processes.
b) Forming or metalworking processes.
c) Machining (material removal) processes.
d) Surface treatment or finishing processes including washing.
e) Heat treating processes.
f) Other modern fabrication processes.

2. Assembly Processes

Assembly processes include processes that are used to join two or more parts. They can be divided in to the following categories;

i. Mechanical fastening processes which include;

a) Threaded fastening.

b) Riveting and crimping.

c) Press fitting.

d) Snap fitting.

e) Sewing and stitching.

ii. Joining processes which include;

a) Welding.

b) Brazing.

c) Soldering.

iii. Adhesive bonding processes.

3.3 Impact of Product Design on the Manufacturing Process

Product design significantly influences the manufacturing processes used to make the product and the costs associated with these processes. Since manufacturing cost is one of the key determinants of the success of a product, the product must be designed so that it is easy to manufacture. The most common methodology used to meet this objective is *Design for Manufacturing* (DFM).

Design for Manufacturing (DFM)

The Design for Manufacturing methodology [Product Design and Development[26], 1995] that follows is a simple five step methodology illustrated in Figure 3.3. The five steps are;

1. Estimate the manufacturing costs.
2. Reduce the costs of components (fabrication costs).
3. Reduce the cost of assembly.
4. Reduce supporting production costs.
5. Consider the impact of DFM decisions on other factors.

Design for manufacturing decisions should be made during the early product development stages. The detailed design of the product should only be finalized after several DFM iterations. The features of the product that do not affect its functionality and that make the product easier to fabricate and assemble should be incorporated into the product. In this methodology, it is assumed that the process engineers involved are knowledgeable about the characteristics of the process and know what design features will reduce the manufacturing effort.

---

[26] Product Design and Development p. 182, K. T. Ulrich and S. D. Eppinger, 1995.

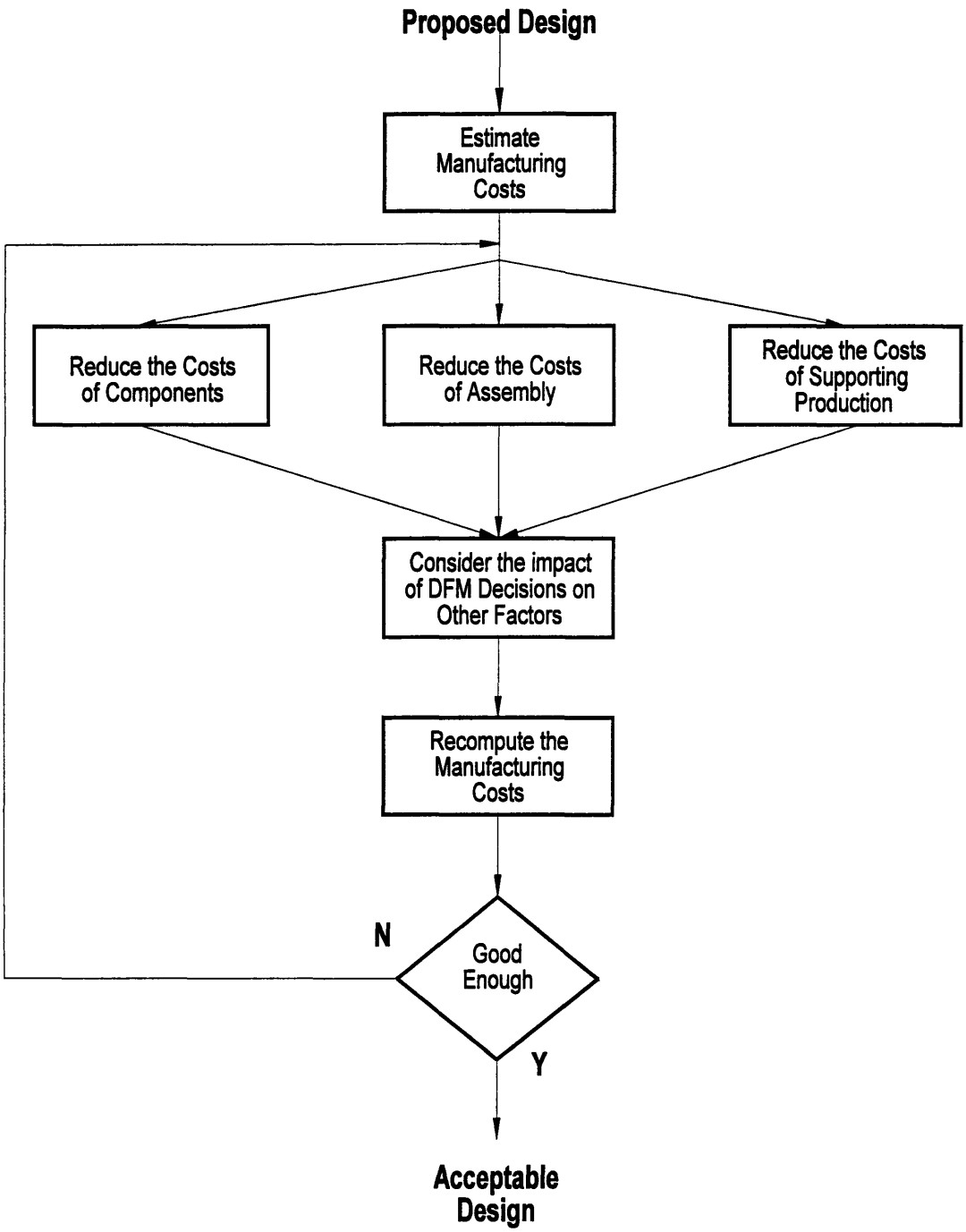

FIGURE 3.3: The design for manufacturing (DFM) methodology[27].

[27] Source: Product Design and Development p. 183, K. T. Ulrich and S. D. Eppinger, 1995.

Design for Assembly (DFA)

For assembly operations, a popular methodology has been developed over the past 20 years to estimate the time to assemble components of different shapes and sizes (Boothroyd and Dewhurst, 1989[28]). The *design for assembly* (DFA) methodology can reduce the assembly cost of the product by carefully analyzing the assembly cost drivers of the product.

One of the goals of design for assembly (DFA) is to reduce the part count. Only the parts satisfying one of the following conditions must be separate;

1. Does the part need to move relative to the rest of the assembly?
2. Must the part be made of a different material from the rest of the assembly for any physical reasons?
3. Does the part have to be separate from the rest of the assembly for assembly, replacement or repair access and ease?

The parts that do not satisfy the above conditions should ***theoretically*** be integrated. Apart from this, the assembly costs can be reduced by making the part easier to assemble. The characteristics listed in Table 3.2 make the part easier to assemble [Boothroyd and Dewhurst, 1989].

---

[28] Boothroyd and Dewhurst have created the most popular methodology for DFA. Software is available to estimate the cost of both manual and automatic assembly. Boothroyd, Geoffrey, and Dewhurst, Product Design for Assembly, Boothroyd Dewhurst, Inc., Wakefield, RI, 1989.

Number	Characteristic
1	Sub-component is inserted from the top of the assembly.
2	Sub-component is self-aligning and does not require fine tuning.
3	Sub-component does not need to be oriented .
4	Sub-component requires only one hand for assembly.
5	Sub-component requires no assembly tools.
6	Sub-component requires a single linear motion.
7	Sub-component is secured as soon as it is positioned so as to avoid defects caused by other assembly processes.
8	Sub-component can not be assembled in the incorrect orientation. This will eliminate operator errors and improve the yield of the assembly process.

TABLE 3.2: Characteristics of an easy to assemble sub-component.

The detailed design of the product should be frozen after several iterations to make it easier to fabricate and assemble. The final design should retain all the functionality of the part while making it easier to manufacture.

3.4 Manufacturing Process Selection Guideline

The guideline presented in this section is intended to guide the Production System designers in selecting the manufacturing processes that are compatible with their sub-system functional requirements. As was discussed in section 2.5, the final requirements for each of the processing steps should be documented in the integrated precedence flow diagrams. The manufacturing process selected for each of these processing steps should meet these requirements. The guideline presented in the following section makes sure that these requirements are met.

Manufacturing Process Selection Guideline

Step 1: Analyze the Integrated Precedence Flow Diagram and select viable manufacturing processes for each step.

Step 2: If more than two manufacturing processes can be used to make a part, do a fixed and variable cost analysis of the processes for estimated production time and volumes.

Step 3: Choose the best processes for each of the processing steps.

Step 4: Analyze the manufacturing processes, looking for candidate processes that could be eliminated by improving one of the other processes (see Example 3.2 and 3.3).

Step 5: Freeze the manufacturing process selection activity and start the equipment design process.

EXAMPLE 3.2: An innovative casting process.

In conventional die-casting, flashing occurs when the metal flows through the openings in the casting die. Traditionally, the flash was removed by hand filing. The hand filing process was improved by automating the process using a trimming press with one stoke operation.

The press operation was considered an improvement over the hand filing operation but in West Germany, Daimler Benz went one step ahead in developing a process that eliminated the need for the filing operation by

eliminating flash. Flashing was caused due to the fact that the trapped air in the die required an opening to exit when the metal was poured in from the sprue. This opening was provided by the small gap in the two molds. By studying the physics of the process, Daimler Benz eliminated flash by first removing the air from the die using a vacuum pump and then injecting in the molten metal. Now, since the air had already escaped before the metal was poured, there was no need to leave an opening in the two molds thereby eliminating flash.

Later on Toyota Motor Corporation used low pressure vacuum casting in its casting processes and other companies used it to improve their injection molding processes.

Here in this example we see how an improvement in one manufacturing process, eliminates other secondary manufacturing processes and makes the Production System lean. Most manufacturing processes have room for improvement. Improvements in manufacturing processes and technology include such measures as finding proper cutting speeds and tools in machining, right temperatures in casting and injection molding, etc. Therefore, experimentation and research should be geared towards improving the current processing technologies in the company.

So, manufacturing process are of two types, ***primary*** and ***secondary***. A *primary* manufacturing process is necessary to add value (or change the quality) to the part. A *secondary* manufacturing process is required to eliminate the undesirable effects of a primary manufacturing process. So, the de-burring operation after machining is a secondary manufacturing process. Similarly, sand blasting after induction hardening is a secondary manufacturing process. Sand

blasting is often used to remove the de-coloration caused by induction hardening. Here we formulate a Manufacturing Process Design principle;

MANUFACTURING PROCESS DESIGN PRINCIPLE 1

Design or improve the primary manufacturing processes so that the need for a secondary manufacturing process is eliminated.

Similarly washing is a secondary manufacturing process, that is required because other processes contaminate the part. The source of the problem is the contaminating process. By studying the fundamental physics of the contaminating process, it might be improved so that the need for washing is not required.

As another example, let us consider a creative punching method that eliminated the need for de-burring.

EXAMPLE 3.3: An innovative punching process.

Figure 3.4 shows a punching process for the tube of a steering gear (which holds the rack) before and after process improvement. Before improvement the hole was punched from the outside of the tube using a standard punch which left a burr on the inside. The burr has to be removed from the inside because the rack could not function smoothly inside the tube because of the burr. The removal of burr required another secondary process step.

After improvement, the engineers came up with a creative design in which the hole could be punched from the inside of the tube leaving the burr on

the outside. This did not effect the functioning of the rack in the tube so it was left on the part.

This example shows that when traditional manufacturing processes are questioned with an understanding of the fundamental physics of the process, new and better ways of processing can be developed that eliminate previously required processing.

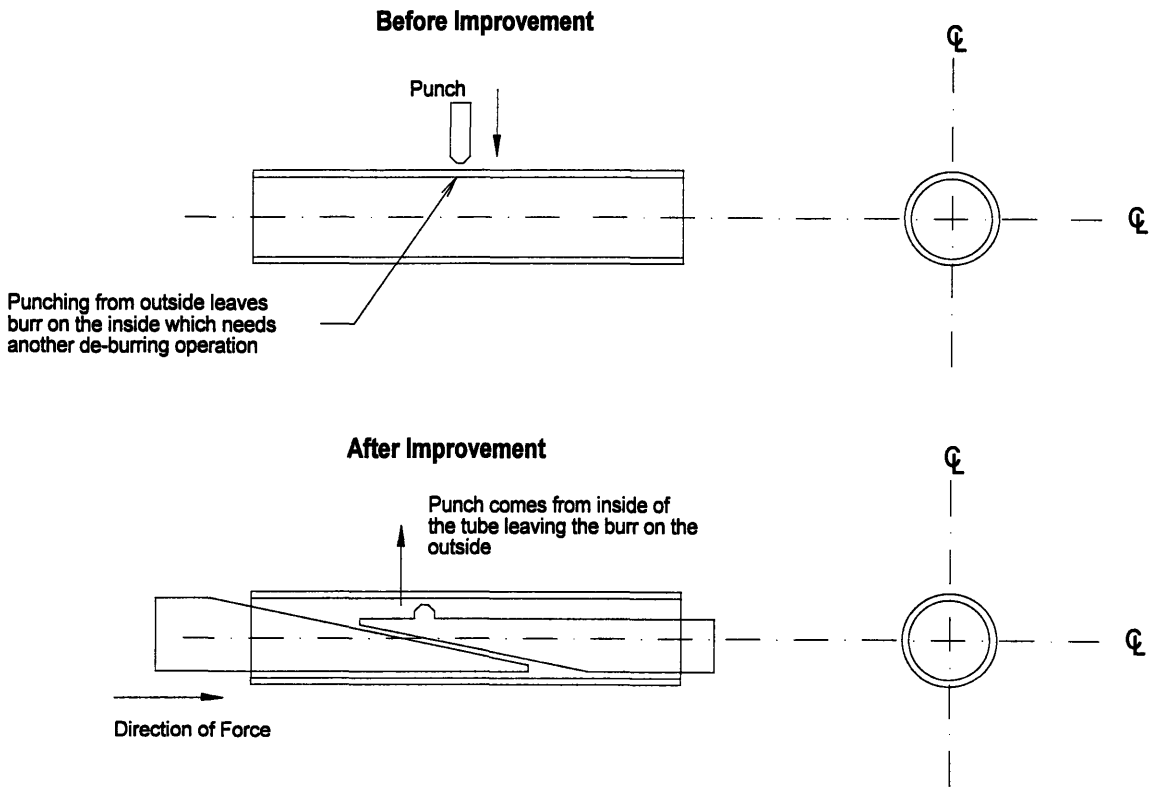

FIGURE 3.4: Punching process, before and after improvement.

Chapter 4
EQUIPMENT DESIGN

4.1 Equipment Concept Development Process

The equipment concept development process is shown in Figure 4.1. We start by analyzing the integrated precedence flow diagram to identify the need of the equipment. After the needs are identified (Chapter 2 of methodology) they are described in the form of functional requirements which is a precise description of what the equipment has to do. Functional requirements specify the needs in technical terms and in this methodology they are specified in two stages. Initially, we set the target functional requirements. Then we generate concepts for the equipment and select one of the concepts. Once a concept has been selected, the target functional requirements are refined in the context of the selected concept. These refined equipment functional requirements are then used

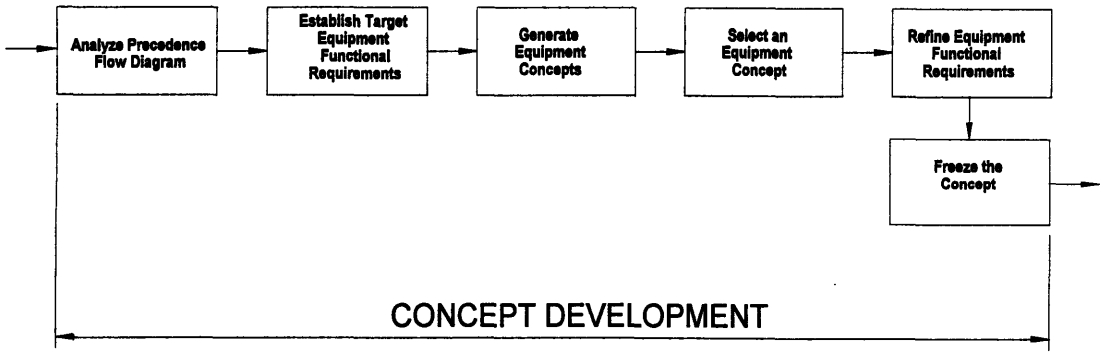

FIGURE 4.1: Equipment concept development process[29].

[29] Figure modified from: Product Design and Development p. 18, K. T. Ulrich and S. D. Eppinger, 1995.

to do the detailed design of the equipment.

4.2 Classification of Equipment

For the purpose of simplification and ease of analysis, equipment (like manufacturing processes) can be divided into two categories. These two categories are;

1. Fabrication Machines
2. Assembly Machines

1. Fabrication Machines

Fabrication machines include processing machines like machine tools, machining transfer lines, forging presses, heat treating equipment, etc. With the term fabrication machines, we mean machines that change the quality of the part by a certain manufacturing process. Within the framework of this methodology, we will divide fabrication machines into two types. This division is not related to the manufacturing process but to whether the machine is batch or non-batch type. Two types of fabrication machines are;

1. **Batch type machines** which process the part in batches only. These include heat treating furnaces, Injection molding machines with multiple cavity dies, etc.

2. **Non-batch type machines** which process the part one at a time. These include a drill press that is fixtured to hold one part at a time, etc.

In the framework of this methodology, when we discuss machines, we include the fixturing and tooling methods as part of the machine. Some machines will be classified as batch or non-batch type depending on the way they are fixtured.

2. Assembly Machines

Assembly machines include machines used to join parts together. These include continuous transfer, intermittent transfer, rotary machines, and other types of assembly machines.

Figure 4.2 shows the division of assembly machines into different categories. These categories cover most of the assembly machines in use today. Assembly machines can be divided into two main groups, ***continuous transfer*** and ***intermittent transfer***. In continuous transfer, the work heads move with the part to be assembled. They are mostly used in the bottling industry and hence will not be discussed any further.

Intermittent transfer machines are commonly used in assembling discrete products and the work heads are stationary in these types of machines. Parts move from one work head (station) to the other and the stationary work heads execute the assembly task after the part is located. Intermittent transfer machines are of two types, indexing and free transfer. In indexing machines the transfer of all parts (or work carriers) occurs simultaneously and the carriers then remain stationary to allow time for the assembly task. Examples of rotary and in-line transfer machines are given in Figure 4.3 and 4.4.

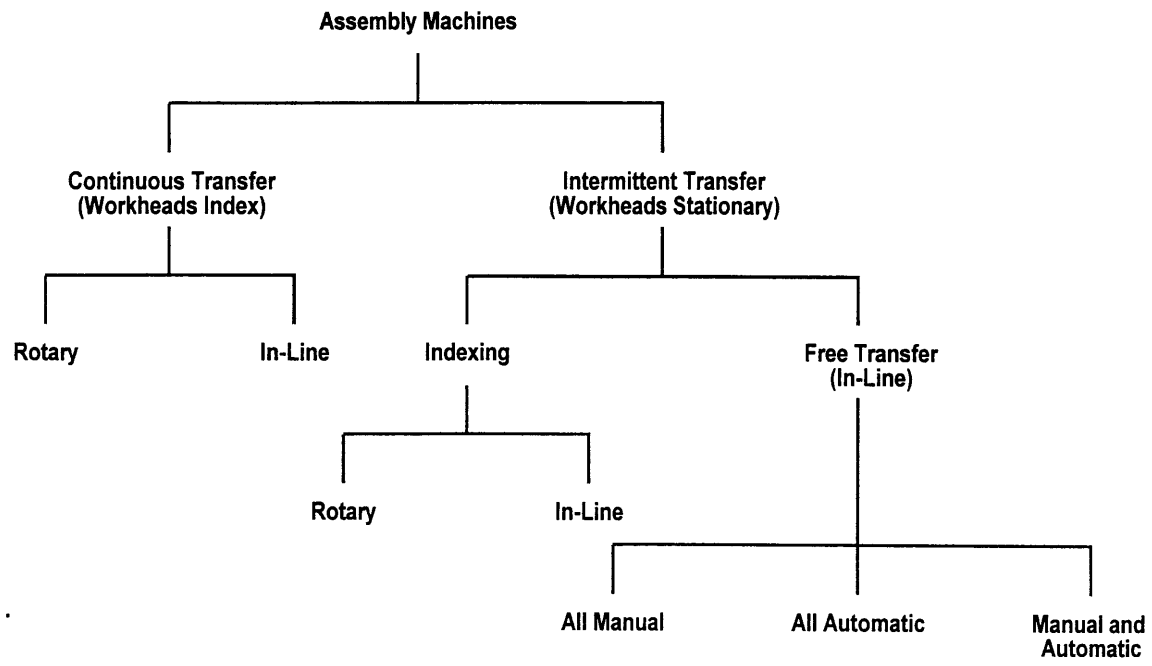

FIGURE 4.2: Division of assembly machines into various categories.

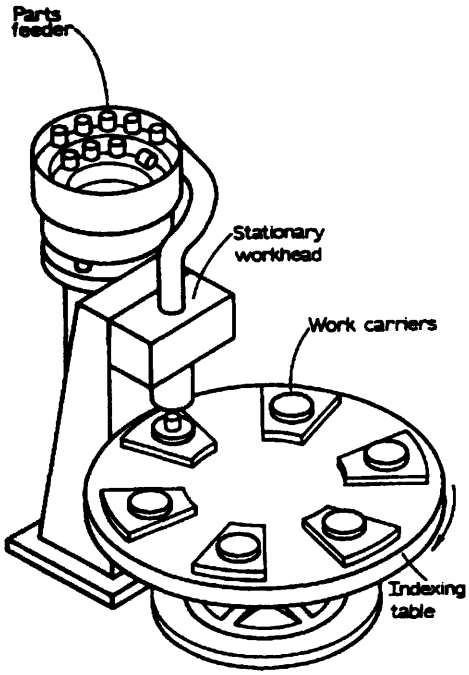

FIGURE 4.3: Rotary Indexing Machine[30].

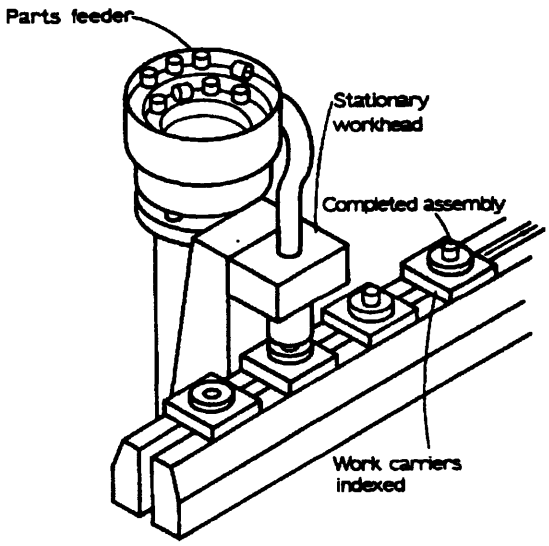

FIGURE 4.4: In-line Indexing Machine[31]

---

[30]Automatic Assembly, Boothroyd, 1982, p 12

In **free transfer machines**, the parts (or work carriers) are not moved from one work head (station) to the other at the same time. Instead the work carriers move independently of each other. The new cycle of operations at each station is only initiated when signals are received, indicating that all the previous operations have been completed. Figure 4.5 shows an example in-line free transfer machine.

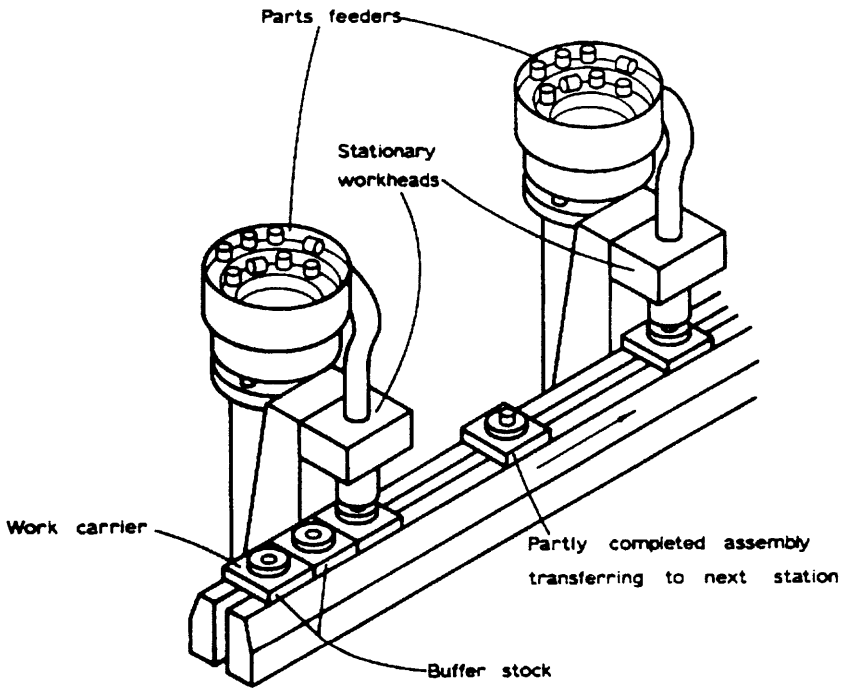

FIGURE 4.5: In-line Free Transfer Machine[32].

---

[31] Automatic Assembly, Boothroyd, 1982, p 13
[32] Automatic Assembly, Boothroyd, 1982, p 25

Free transfer machines are very well suited to manual assembly operations because of the variation in manual assembly times. They also allow manual and automatic operations to be carried out on the same line.

4.3 Establishing Equipment Functional Requirements[33]

At this stage of the equipment design process, the need for the equipment is understood and is explicitly expressed in the form of an engineering specification or an item list of requirements. In the framework of this methodology we call such expressed needs *functional requirements* {FRs}. Function in this case not only refers to the performance of the equipment to be designed but also to other factors of importance like cost, delivery time, safety requirements, operational ease, etc. The need for an equipment is dictated to a large extent by the sub-system of which the equipment will become a part of. Therefore it is very essential to analyze the sub-system to identify the requirements of the equipment clearly. This was discussed in Chapter 1 and it was recommended that all these requirements should be written in the integrated precedence flow diagram.

The target functional requirements for a piece of equipment that needs to be build, must be stated clearly at the equipment planning stage. The functional requirements for a new machine can be divided into three categories;

---

[33] The methodology for specifying target and refined FRs is adapted from: Product Design and Development, Chapter 4, K. T. Ulrich and S. D. Eppinger, 1995.

1. Sub-system Related Functional Requirements

Sub-system related requirements are dictated by the final conceptual sub-system design. They include parameters like, changeover timer, batch size, ease of maintenance, etc.

2. Processing Related Functional Requirements

These are the requirements that are imposed by the processing method that is chosen to process the part. For example in machining, although we want to achieve higher and higher material removal rates, they are limited by the physics of the process.

3. Product Related Functional Requirements

Product related requirements are related to the material and the geometry of the product and will determine the fixture design of the fabrication and assembly machines. For example, a part made out of plastic will need a fixturing method that does not damage the part and it will be different in case the part was of a different material or geometry.

Some of the requirements of the machines will be related to all the three categories listed above. In this section emphasis will be on establishing the sub-system requirements for a piece of equipment. Since processing and product related requirements would depend on the case at hand, a general guideline will be presented to determine them.

Most problems in equipment design occur not because the functional requirements are not met but because they are not specified correctly. To make

matters worse, mostly the sub-system related functional requirements are not specified at all. Once the sub-system, processing and product related target functional requirements are specified, the designer should try to come up with a concept that meets all these requirements. Some of the processing and product requirements will be in conflict with the sub-system requirements. If this is the case, the designer should try come to a reasonable compromise. Figure 4.6 shows an equipment design in which some of the requirements of the sub-system are not satisfied because of the process and product related functional requirements. The shaded areas show the features of the equipment design that crossed the sub-system functional domain. A good equipment design is one in which theses areas are as small as possible.

The equipment designer should strive for a design that satisfies all the sub-system related functional requirements while satisfying the product and process related functional requirements. We can formulate this into an Equipment Design principle;

EQUIPMENT DESIGN PRINCIPLE 1

Equipment should be designed to meet the sub-system related functional requirements while satisfying the product and process related functional requirements.

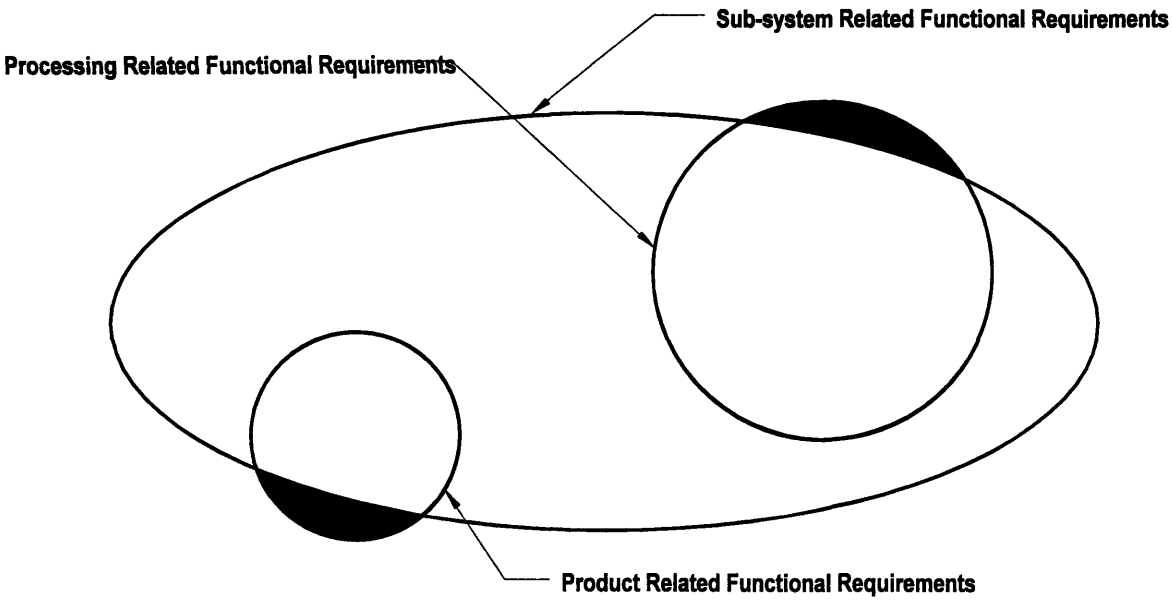

FIGURE 4.6: An equipment design in which the some of the sub-system related FRs are violated because of the product and process related FRs. The shaded area shows the product and process related FRs that violated the sub-system FRs.

1. Sub-system Related Functional Requirements

The following are the main sub-system related requirements;

1. Capacity of machine (desired cycle time).
2. Number of product types the machine can produce.
3. Changeover time of the machine, specified in minutes.
4. The processing batch size of the machine (single piece flow, etc.).
5. The transportation batch size.
6. Ergonomics of machine.
7. Ease of maintenance of machine.

8. Safety requirements of machine.
9. The target cost of machine (design the machine itself to be easy to manufacture).
10. Inspection requirements within the machine.
11. Ease of wearable tool/component change.
12. Operator interface requirements including problem diagnosing aids.
13. Ease and location of loading/unloading parts into the machine.
14. Location of control cabinets.
15. Footprint of machine.
16. Ease of relocation of machine (flexible piping and wiring connections).
17. Durability of machine (life time of machine).
18. Other important sub-system FRs.

2. Processing Related Functional Requirements

The processing related requirements are related to fundamental physics of the process. The following are the main types of processing related functional requirements;

1. Structure of the machine (to support dynamic and static loads, etc.).
2. Actuator requirements (pneumatic, linear motor, hydraulic, spindle torque, bearings, etc.).
3. Accuracy, repeatability and precision requirements.
4. Controls (PLC, PC based, Open loop controls/Closed loop feedback controls, etc.) required.
5. Power requirements.
6. Sensors required.

7. Other requirements that are specific to the process.

3. Product Related Functional Requirements

1. Fixturing requirements.
2. Interchangeable tooling requirements for different product types (mix) and future product model changes.
3. Requirements related to the sensitivity of product to the processing environment.

As mentioned above, the equipment functional requirements will be specified in two stages. First we set the target functional requirements and then after the final equipment concept has been selected, we specify the refined functional requirements.

4.3.1 Establishing Target Functional Requirements

Target FRs are established after the integrated processing flow diagram for the processing step is analyzed but before the equipment concepts are generated and the most viable one selected. The process of establishing target FRs is a three step process;

1. Prepare the list of FRs. These include;
   - **i.** Sub-system related FRs.
   - **ii.** Processing related FRs.
   - **iii.** Product related FRs.

2. Set ideal and marginally acceptable target values for each FR.

3. Reflect on the results and the process.

The target list of FRs should be created in the form of a spreadsheet. All of the sub-system FRs must be given a target value along with the relevant processing and product related FRs for the piece of equipment to be designed. Each FR should be given an ideal and a marginal target value. The ideal value represents the exact desired value and the marginal value represents an acceptable value of the FR.

An example spreadsheet for a hypothetical assembly press is shown in Table 4.1. While making the spreadsheet for the FRs, the importance of each FR should be given on a suitable scale. For FRs that do not have a numerical value (subjective), they could either be represented as a "list" or as "binary". For example, the FR that the equipment should satisfy the American Safety Standards is a binary FR. Under the list category, the FR can be specified with a list of acceptable parameters.

After preparing the list of FRs and setting the marginally acceptable and ideal target values, the members of the team should reflect on the results of the process. Reflection after setting the target FRs will ensure that the FRs are indeed consistent with the targets of the equipment design project. Several design iterations might be required before the final set of target FRs are generated.

No	FR	Imp	Units	Ideal Value	Marginal Value
	Sub-system Related				
1	Cycle time	5	sec	<3	<4
2	Footprint of machine	3	sq. m	<2	<3
3	Changeover time	4	minutes	<10	<20
4	Passes Safety standards	5	binary	pass	pass
	Processing Related				
1	Spindle speed	4	m/sec	>2	>1
2	The press should be controlled by a PLC	2	list	BOSCH SL100	Any other PLC
	Product Related				
1	Location tolerance	5	m	+.002 -.002	+.005 -.005

TABLE 4.1: FRs for a hypothetical assembly press.

Once the design team has generated the target FRs for the equipment, design concepts should be generated for the equipment and the best concept selected.

4.3.2 Establishing Refined Functional Requirements

After the best equipment concept is selected, the target FRs are refined according to the limitations imposed by the selected concept. The proposed process of refining the FRs is a four step process;

1. Develop technical models of the equipment.
2. Develop a cost model of the equipment.
3. Refine the FRs, making necessary trade-offs.
4. Reflect on the results of the process.

The first step in FR refinement is to develop technical models of the equipment. Technical models are of two types, analytical and physical.

In analytical modeling, the equipment (or some subset of equipment) is modeled using mathematical equations describing the fundamental physics. In almost all equipment design cases, the equipment should be broken up into logical subsets and each subset should be modeled to see if it meets the desired FRs.

Sometimes analytical models might not be possible or feasible in the allowed development time. If this is the case, then physical models are very useful. In physical modeling, different physical mock-ups or prototypes of the subsets under investigation are built. Then these prototypes are tested to find the optimal design values of the variables that satisfy the FRs. Sometimes experience with previously designed equipment can be enough to determine how the concept of the equipment subset in going to function.

After making the models of all the subsets of the equipment, a cost model of the equipment should be developed. The purpose of the cost model is to see if the equipment can be manufactured at a reasonable cost. Bill of materials is traditionally used to determine the cost of the equipment. Estimate costs of the components should be determined from vendors. At this stage of the equipment design process, not all the components of the equipment are known or could be determined. Nevertheless, the design team should come up with intelligent estimates about the general cost of the equipment subsets. Also, the assembly cost of the equipment should be estimated in the Bill of materials.

An example Bill of materials for the hypothetical assembly press is shown in Table 4.2. Note that is this case the design team decided to break the cost into four categories, Mechanical, Electrical, Pneumatic, and Assembly.

No	Component	Design ($)	Build ($)	Total($)
	Mechanical			
1	Press	1,000	2,000	3,000
2	Robot			30,000
	Electrical			
1	PLC			5,000
2	Press VME controller			30,000
	Pneumatic			
1	Gripper	1,000	1,000	2,000
2	Solenoid Valves			1,000
	Assembly at $25/hr		100 hours	2,500
	TOTAL			**$73,500**

TABLE 4.2: Bill of materials for the hypothetical assembly press.

After constructing the cost model for the equipment to be designed, the design team should refine the FRs on the bases of the technical and cost models. Information from the technical and cost models can be used to make tradeoffs between the desired FRs of the equipment. Once the FRs are refined, they can used to do the detailed design of the equipment.

The last step in determining the refined FRs is to reflect on the results and the refinement process. A major component of this reflection is to look for any inconsistencies in the selected concept, refined FRs and the estimated Bill of materials. The Bill of materials will point out major cost drivers for the piece of

equipment. These cost drivers should be carefully analyzed and the cost reduced through creative redesign ideas. The cost reduction activity will depend on the remaining development time.

After the cost reduction activity, the conceptual design of the equipment is frozen, and detailed design of equipment sub-components should be done.

4.4 Design of Assembly Equipment

There are certain issues in the design of assembly equipment that must be addressed carefully in the equipment design process. One of the key questions in the design of an assembly equipment is;

QUESTION

Which assembly tasks should be automated and which should be done manually?

The fact that we have these two options means that one of these options will be certainly more profitable than the other one for the task and the production volume that will be assembled. In most new Production System startups the production volumes are only estimates based on forecasts and the actual volume is almost always different from these forecasts. It is recommended that initially all the assembly tasks should be done manually with mechanical assistance mechanisms. This will generate useful information about the complexity of each assembly task and will help the machine designers decide which tasks are suited to be done manually and which ones are suited to

automation. If some operations are decided to be done manually and some automated, then completely manual or free-transfer conveying systems should be used.

Furthermore, assembly lines are made in the form of assembly stations that are linked by some sort of a transport system (see Figure 4.2 for classification of assembly systems). The next important question regarding the design of an assembly sub-system (line) is;

QUESTION

Should the transportation of part between the stations (or assembly work heads) be done manually or with some form of automated conveying system (either palletized or non-palletized)?

Careful cost analysis must be done before investing in an automated conveyor system and pallets (work holders). The issues that need to be addressed during the decision making process are;

Weight of the Assembly

If the part is heavy, then mechanically assisted transportation or automated transportation systems should be considered. A rule of thumb is that if the part can be carried easily with one hand then it is suitable for manual transportation with out any assistance.

Sensitivity of Assembly

If the assembly is sensitive to vibration and shock because of the movement of the assembled sub-components, then the designer should be very careful about manual handling (Manual handling means that the operator picks the part with his/her hands and walks to the next station with the part). Also when automating the transportation of sensitive assemblies, the conveyor system designer must make sure that the acceleration and de-acceleration of the part and the pallet is within the desired values.

Size of Assembly

The size of assembly will also determine whether it is suited for manual or automated handling. Some very small parts and some oversized parts are not suitable for manual handling.

Design of Assembly

The design of assembly is also an important consideration. A part could be designed in such a way that all the assembly tasks can be done with linear motions in the vertical axis. In this case an indexing type assembly machine might be the best option if the production volumes justify the initial investment cost. If a part requires a lot of re-orientations during the assembly process then manual transport should be preferred over automated transfer.

Production Volume of Assembly

The production volume of assembly will determine whether the manual method of transport with low investment but relatively higher variable costs or

the automated method of transport with high investment and some what lower variable costs should be selected. Since the production volumes are not exactly known at the assembly line design stage, traditionally the decision has been a gamble with high risks.

A higher level solution to this problem lies in the design of the assembly line itself. Modularity in assembly line design is the key to a sub-system that can start off with manual transportation and later on be automated (if production volumes increase). What is suggested here is modular design of assembly stations (or work heads) so that initially workers can transport the parts between them and later on if required an automated conveyor be easily added to link the stations. This would require modular design of assembly stations with in-built design features that can accept a conveyor in future.

This concept is theoretical and has not been tried by any company yet. The key challenge is the design of modular assembly stations which are ergonomically designed for manual loading and unloading of the assembly and yet have design interfaces that can be used to add a conveyor to automate the transportation of assembly (or pallet) in future if need arises.

4.5 Design and Selection of Fabrication Equipment

Usually fabrication machines are purchased from equipment vendors and then the machines are tooled and fixtured to do the desired processing step on raw or semi-processed material. When purchasing a piece of machine tool or other fabrication equipment it must be kept in mind that the machine satisfies the target FRs that are specified in the equipment concept design phase (see Section

4.3.1). In almost all cases the purchased equipment would require modification so that it satisfies the target and refined FRs. Example 2.4 in Chapter 2 described a volume flexible machining cell which comprised of some modified off the shelf machine tools and some custom build machines.

Whenever possible, non-batch fabrication equipment should be preferred over batch type fabrication equipment as the former results in shorter Lead times and greater flexibility.

The sub-system designers must understand that sub-system and equipment design is an iterative process in which the decisions made at the equipment level will effect the design of the sub-system (or cell). In the sub-system design process it is recommended to analyze the sub-system related FRs after the fabrication equipment is designed or selected.

Chapter 5
CONCLUSION

The Production System Design methodology presented in this document had two main design objectives of *avoiding waste* and having the required *flexibility*. The Production System designer must keep these objective in mind at all times.

The approach that was taken in writing this methodology was to identify all the key issues at each stage of the sub-system design process and then present simple guidelines that would help the designer answer these key issues and questions. Production System design is a mixture of theory and practice. Relying only on theory and design rules will be misleading because there are a large number of nuances and exceptions when Production Systems are developed in practice. It is the right balance between theory and practice that results in world class Production Systems. It is hoped that the methodologies presented in this document will help the designer strike this balance.

In Chapter 1, seven wastes of production were mentioned. The eighth waste of production, which is indeed one of the most harmful is *unused creativity*[34]. As humans, each one of us wants to demonstrate creativity. In manufacturing companies, the employees from managers, engineers to the operators on the shop floor must be given the opportunities and encouragement

---

[34] During one of my recent visits to a company that had successfully implemented lean manufacturing, I saw a chart in the tool shop that made poka-yokes and other fixtures to be used in the factory. The chart identified *unused creativity* as the eighth waste of production.

to demonstrate their innate creativity. If this creativity is utilized in eliminating the other seven wastes of production, truly world class Production Systems can be developed.