PERSONAL COMPUTERS

Hoo-min D. Toong
Amar Gupta

December 1982

CISR WP #99
Sloan WP #1409-83

Center for Information Systems Research
Massachusetts Institute of Technology
Sloan School of Management
77 Massachusetts Avenue
Cambridge, Massachusetts, 02139

PERSONAL COMPUTERS

Hoo-min D. Toong
Amar Gupta

December 1982

CISR WP #99
Sloan WP #1409-83

Reprinted by permission Scientific American

Center for Information Systems Research
Sloan School of Management
Massachusetts Institute of Technology

3129
SCIENTIFIC AMERICAN OFFPRINTS

Personal Computers

by Hoo-min D. Toong and Amar Gupta

SCIENTIFIC AMERICAN
DECEMBER 1982
VOL. 247, NO. 6 PP. 86-107

PUBLISHED BY W. H. FREEMAN AND COMPANY 660 MARKET STREET, SAN FRANCISCO, CALIFORNIA 94104

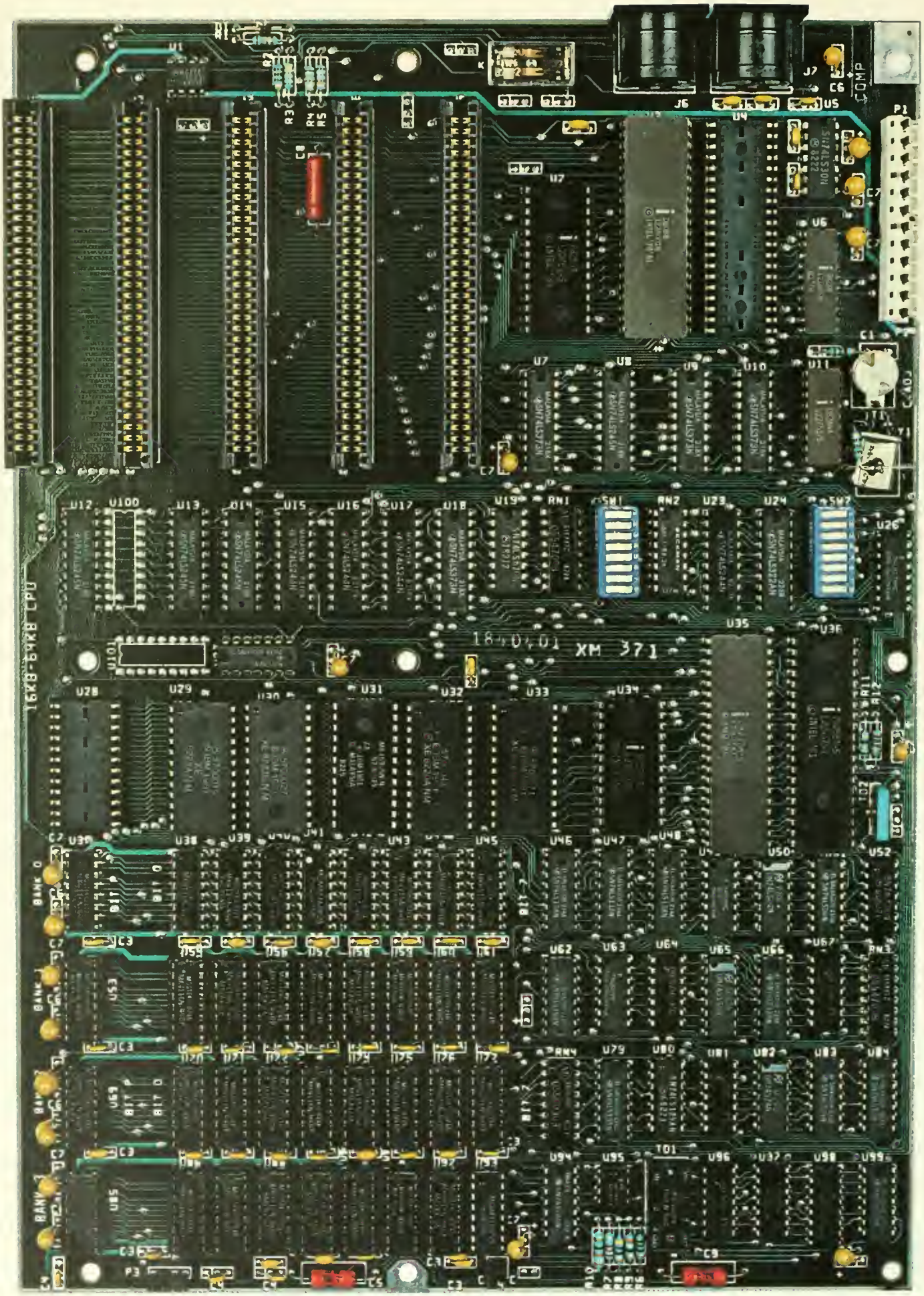
16X8-8X8 CPU
18-0-01 XM 371

Personal Computers

An account of their hardware, software, applications and current proliferation. By making computers accessible to untrained people they promise to bring about the long-heralded computer revolution

by Hoo-min D. Toong and Amar Gupta

If the aircraft industry had evolved as spectacularly as the computer industry over the past 25 years, a Boeing 767 would cost $500 today, and it would circle the globe in 20 minutes on five gallons of fuel. Such performance would represent a rough analogue of the reduction in cost, the increase in speed of operation and the decrease in energy consumption of computers. The cost of computer logic devices is falling at the rate of 25 percent per year and the cost of computer memory at the rate of 40 percent per year. Computational speed has increased by a factor of 200 in 25 years. In the same period the cost, the energy consumption and the size of computers of comparable power have decreased by a factor of 10,000.

The result is the advent of the personal computer, which for less than $500 can put at the disposal of an individual about the same basic computing power as a mainframe computer did in the early 1960's and as a minicomputer did in the early 1970's. Twenty years ago the cost of a computer could be justified only if the machine met the needs of a large organization. The minicomputers introduced in the 1970's are appropriate for a department or a working group within such an organization. Today the personal computer can serve as a work station for the individual. Moreover, just as it has become financially feasible to provide a computer for the individual worker, so also technical developments have made the interface between man and machine increasingly "friendly," so that a wide array of computer functions are now accessible to people with no technical background.

The first personal computer was put on the market in 1975. By the end of this year more than a million personal computers will be in service in the U.S. alone. In 1981 total sales of personal computers and their accessories in the U.S. amounted to $2.2 billion; sales are expected to surpass $6 billion in 1985. There has been talk of a "computer revolution" ever since the electronics industry learned in the late 1950's to inscribe miniature electronic circuits on a chip of silicon. What has been witnessed so far has been a steady, albeit remarkably speedy, evolution. With the proliferation of personal computers, however, the way may indeed be open for a true revolution in how business is conducted, in how people organize their personal affairs and perhaps even in how people think.

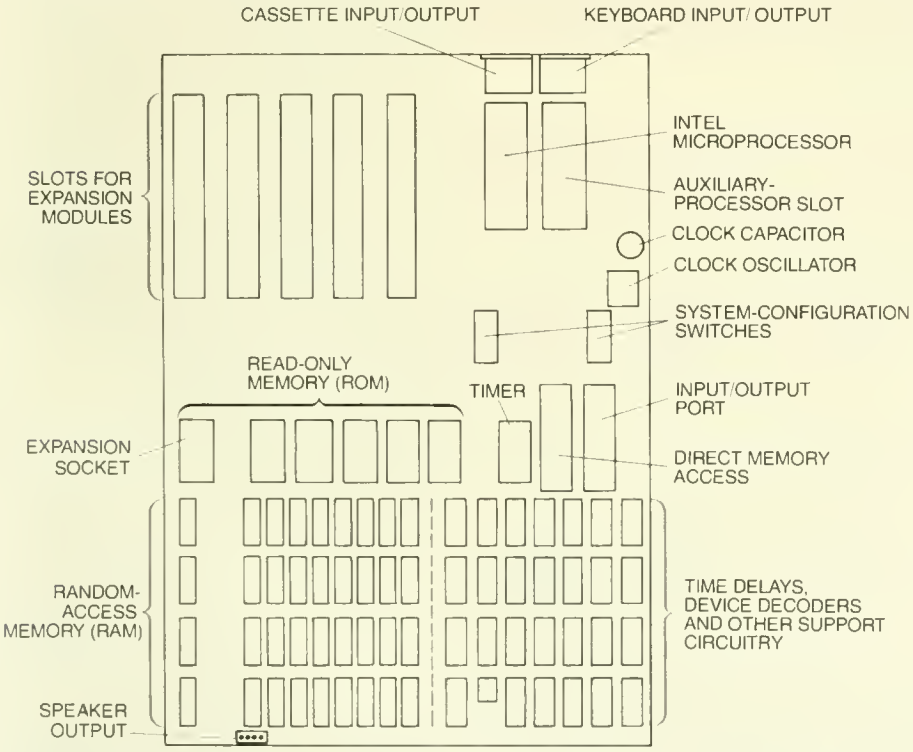

MAIN CIRCUIT BOARD of the IBM Personal Computer is shown in the photograph on the opposite page and its major elements are identified in the drawing above. The size of the board is 8½ by 12 inches. To it are attached a large number of silicon chips carrying integrated circuits; each chip is about a quarter of an inch square and is encased in a rectangular plastic package fitted with electrodes. The chips and elements such as resistors and capacitors are interconnected by conductors printed on the board. The microprocessor, the 16-bit 8088 made by the Intel Corporation, has 20,000 transistors and operates at a frequency of almost five million cycles per second. "System programs" are stored permanently in the read-only memory (ROM); random-access memory (RAM) stores programs and data that change from time to time.

Anatomy of a Computer

A computer is essentially a machine that receives, stores, manipulates and communicates information. It does so by breaking a task down into logical operations that can be carried out on binary numbers—strings of 0's and 1's—and doing hundreds of thousands or millions of such operations per second. At the heart of the computer is the central processing unit, which performs the basic arithmetic and logic functions and supervises the operation of the entire system. In a personal computer the central processing unit is a microprocessor: a single integrated circuit on a chip of silicon that is typically about a quarter of an inch on a side. Other silicon

chips constitute the computer's primary memory, where both instructions and data can be stored. Still other chips govern the input and output of data and carry out control operations. The chips are mounted on a heavy plastic circuit board; a printed pattern of conductors interconnects the chips and supplies them with power. The board is enclosed in a cabinet; in some instances there are several boards.

Information is entered into the computer by means of a keyboard or is transferred into it from secondary storage on magnetic tapes or disks. The computer's output is displayed on a screen, either the computer's own cathode-ray tube, called a monitor, or an ordinary television screen. The output can also be printed on paper by a separate printer unit. The device called a modem (for modulator-demodulator) can be attached to convert the computer's digital signals into signals for transmission over telephone lines.

The chips and other electronic elements and the various peripheral devices constitute the computer's hardware. The hardware can do nothing by itself; it requires the array of programs, or instructions, collectively called software. The core of the software is an "operating system" that controls the computer's operations and manages the flow of information. The operating system mediates between the machine and the human operator and between the machine and an "application" program that enables the computer to perform a specific task: solving a differential equation, calculating a payroll or editing a letter. Programs are ordinarily stored in secondary-memory media and are read into the primary memory as they are needed for a particular application.

The Personal Computer

A personal computer is a small computer based on a microprocessor; it is a microcomputer. Not all microcomputers, however, are personal computers. A microcomputer can be dedicated to a single task such as controlling a machine tool or metering the injection of fuel into an automobile engine; it can be a word processor, a video game or a "pocket computer" that is not quite a computer. A personal computer is something different: a stand-alone computer that puts a wide array of capabilities at the disposal of an individual. We define a personal computer as a system that has all the following characteristics:

1. The price of a complete system is less than $5,000.

2. The system either includes or can be linked to secondary memory in the form of cassette tapes or disks.

3. The microprocessor can support a primary-memory capacity of 64 kilobytes or more. (A kilobyte is equal to 2^{10}, or 1,024, bytes. A byte is a string of eight bits, or binary digits. One byte can represent one alphabetic character or one or two decimal digits. A 64-kilobyte memory can store 65,536 characters, or some 10,000 words of English text.)

4. The computer can handle at least one high-level language, such as Basic, Fortran or Cobol. In a language of this kind instructions can be formulated at a fairly high level of abstraction and without taking into account the detailed operations of the hardware.

5. The operating system facilitates an interactive dialogue; the computer responds immediately (or at least quickly) to the user's actions and requests.

6. Distribution is largely through mass-marketing channels, with emphasis on sales to people who have not worked with a computer before.

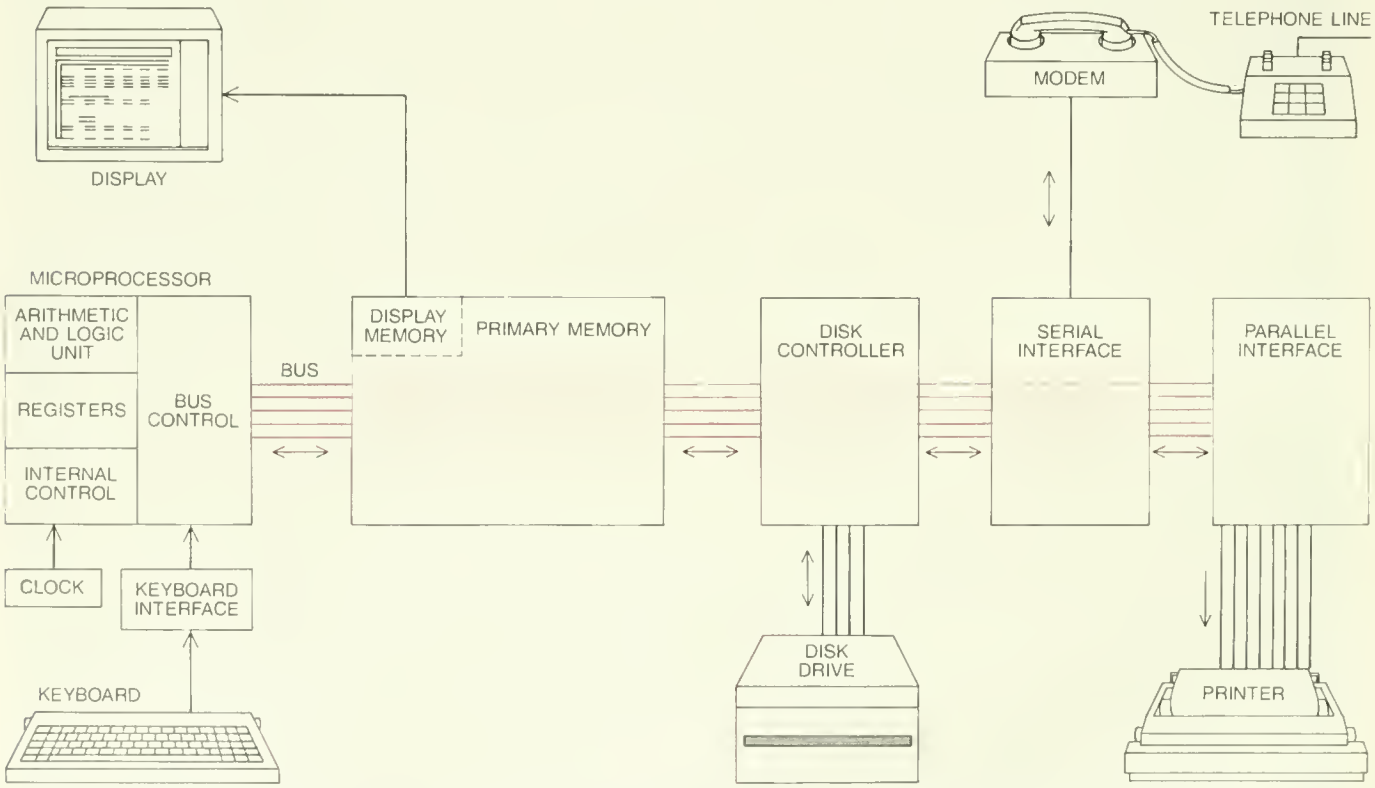

HARDWARE OF A PERSONAL COMPUTER includes devices for processing and storing information and for communicating with the user and with other electronic devices. A set of parallel conductors called a bus (*color*) connects the main components. The processing unit, which generally includes not only the microprocessor chip itself but also various auxiliary chips, carries out essentially all calculations and controls the entire system. Information can be entered into the system through a keyboard. Pressing a key generates a coded signal unique to that key; the code is stored in the display memory and so appears on the cathode-ray-tube display. The primary memory, which consists of semiconductor memory chips, holds programs and data currently in use; it is a random-access memory, meaning that the content of any cell can be examined or changed independently of all the other cells. Disk storage generally has a larger capacity than the primary memory, but it is slower and its information is recovered in larger blocks. The interfaces connect the computer to other devices, such as a printer or a modem (which gives access to other computers through the telephone system). In a serial interface information is transferred one bit at a time; in a parallel interface multiple conductors carry several bits (in most instances eight) at a time.

7. The system is flexible enough to accept a wide range of programs serving varied applications; it is not designed for a single purpose or a single category of purchasers.

The definition will surely change as improved technology makes possible—and as the marketplace demands—the inclusion of more memory and of more special hardware and software features in the basic system. Having defined a personal computer, of necessity somewhat arbitrarily, we shall now describe its essential components in some detail.

Microprocessor and Memory

Two major determinants of the computational power of a microprocessor are its word size, which governs the "width" of the computer's data path, and the frequency of its electronic clock, which synchronizes the computer's operations. The trend in microprocessors is toward a larger word size and a higher frequency. As the word size increases, an operation can be completed in fewer machine cycles; as the frequency increases, there are more cycles per second. In general a larger word size also brings the ability to access a larger volume of memory. The first generation of true personal computers, which came on the market between 1977 and 1981, had eight-bit microprocessors; the most recently introduced systems have 16-bit ones. Now 32-bit microprocessor chips are available, and soon they will be included in complete computer systems. Today an eight-bit chip costs $5, a 16-bit chip costs $50 and a 32-bit chip costs $250. As improved technology lowers costs more personal computers will come to have 32-bit processors. Until perhaps 1985, however, a 16-bit word size will probably be standard. As for clock frequency, the trend has been from one megahertz (one million cycles per second) a few years ago to 10 megahertz or more today.

There are two kinds of primary memory: read-only memory (ROM) and random-access memory (RAM). Read-only memory is for information that is "written in" at the factory and is to be stored permanently. It cannot be altered. For a single-application computer such as a word processor the information in ROM might include the application program. In the case of a versatile personal computer it would include at least the most fundamental of the "system programs," those that get a computer going when it is turned on or interpret a keystroke on the keyboard or cause a file stored in the computer to be printed. As the cost of ROM drops there has been a tendency among manufacturers to include more and more system programs in ROM rather than on secondary-storage media.

Random-access memory is also called read/write memory: new information can be written in and read out as often as it is needed. RAM chips store information that is changed from time to time, including both programs and data. For example, a program for a particular application is read into RAM from a secondary-storage disk; once the program is in RAM its instructions are available to the microprocessor. A RAM chip holds information in a repetitive array of microelectronic "cells," each cell storing one bit. The density of commercially available memory chips, that is, the number of bits per chip, has increased by a factor of 64 over the past decade, with a resulting 50-fold reduction in the cost per bit. Five years ago a single RAM chip stored no more than 16 kilobits (16,384 bits); now several personal computers have 64-kilobit chips, and by 1984 the 256-kilobit chip is expected to be widely available.

Even though the individual memory chip is an array of bits, information is generally transferred into and out of primary memory in the form of bytes, and the memory capacity of the computer is measured in bytes. A typical personal computer comes with a RAM capacity of between 16 and 64 kilobytes, which can be expanded by the addition of extra memory boards, or modules. In general it is a good rule to buy a system that has at least enough memory to accommodate the largest application program one expects to execute. Most off-the-shelf program packages carry an indica-

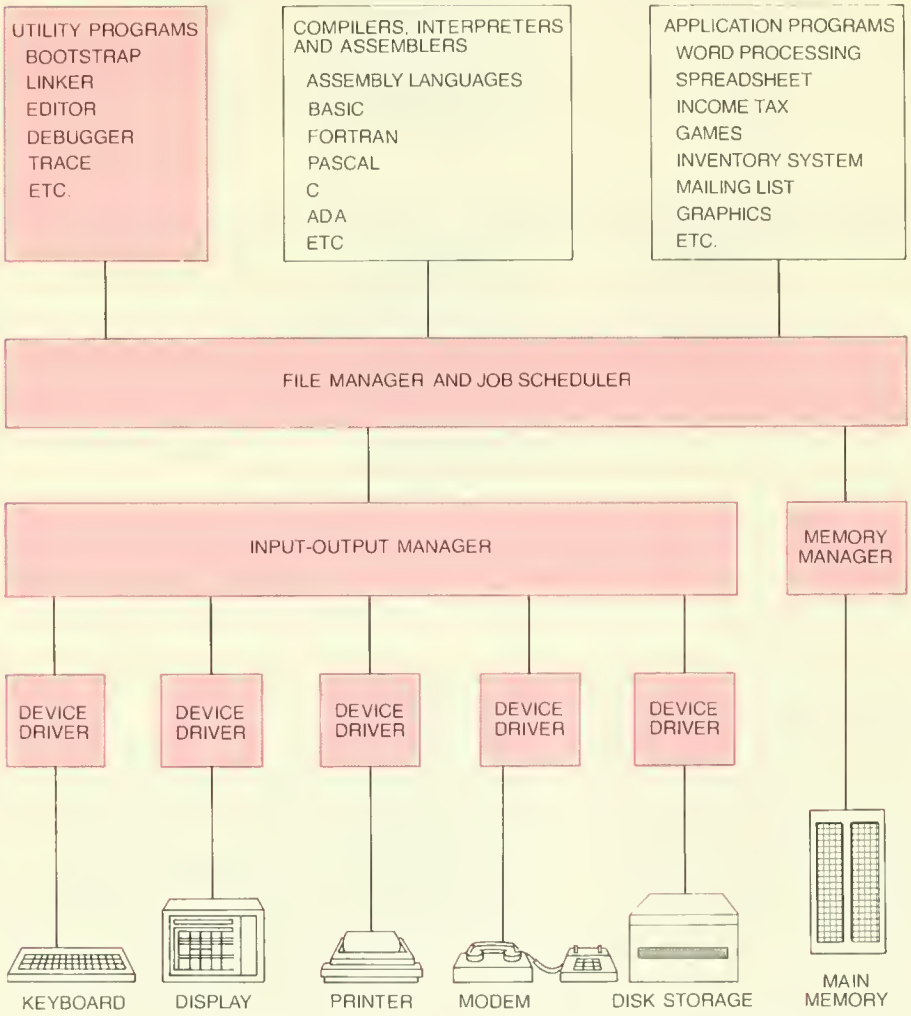

SOFTWARE OF THE COMPUTER is centered on the operating system (*color*), a set of programs that manage the computer's resources, supervise the storage of programs and other information and coordinate the various tasks. Application programs are those that carry out some function at the user's direction. In principle an application program could be designed to run without an operating system, but it would have to include detailed instructions for the allocation of storage space both in the primary memory and on disks and for operating all the peripheral devices associated with the computer. These tasks are taken over by the operating system. Programs must be in "machine language" (a string of binary digits) in order to be executed. The necessary translation is done by programs called assemblers, compilers and interpreters. Assemblers and compilers translate an entire program before it is run; interpreters translate each instruction in turn as the program is being run. Various utility programs, which are sometimes considered part of the operating system, can assist the user in writing or running other programs. A "bootstrap" program, for example, supplies the initial instructions when the computer is first turned on, and a trace program allows the state of the system to be examined.

tion of the minimum memory required.

The standard medium for secondary storage is the floppy disk: a flexible disk of Mylar plastic, now either 5¼ or eight inches in diameter, coated on one side or both sides with a magnetic material. Information is stored in concentric tracks of minute magnetized regions; changes in the direction of magnetization represent binary 0's and 1's. The information is written onto the disk and retrieved from it by a recording head that is moved radially across the spinning disk to a particular track. The track in turn is divided into a number of sectors, and as a rule information is written or read one sector at a time. Depending on the particular format there are between eight and 26 sectors per track and each sector holds from 128 to 512 bytes of data. The total storage capacity of a floppy disk varies according to the density of the data stored along a track (as high as 7,000 bits per inch), the density of the concentric tracks (as high as 150 tracks per radial inch) and the number of segments into which each track is divided. Most floppy disks now have a capacity of from 125 to 500 kilobytes; disks of higher density are beginning to be available.

A more expensive alternative to the floppy disk is the Winchester disk, in which the magnetic coating is applied to a rigid aluminum platter. A personal-computer Winchester disk unit can have a capacity of from five to 50 megabytes (millions of bytes), and it can transfer data faster than a floppy disk. On the other hand, the Winchester disk is permanently sealed in the drive unit, whereas a floppy disk can be removed from the drive and replaced by a fresh disk.

A simpler, less expensive secondary-memory medium is the audio magnetic-tape cassette. One cassette can store about as much information as a relatively low-capacity floppy disk. The access time to a particular address, or storage location, is much longer for tape than it is for a disk because the speed of the tape is much lower than that of a disk and because the information is arrayed in a single linear sequence. An important feature of all the magnetic secondary-storage mediums is that information is maintained even when the computer is turned off.

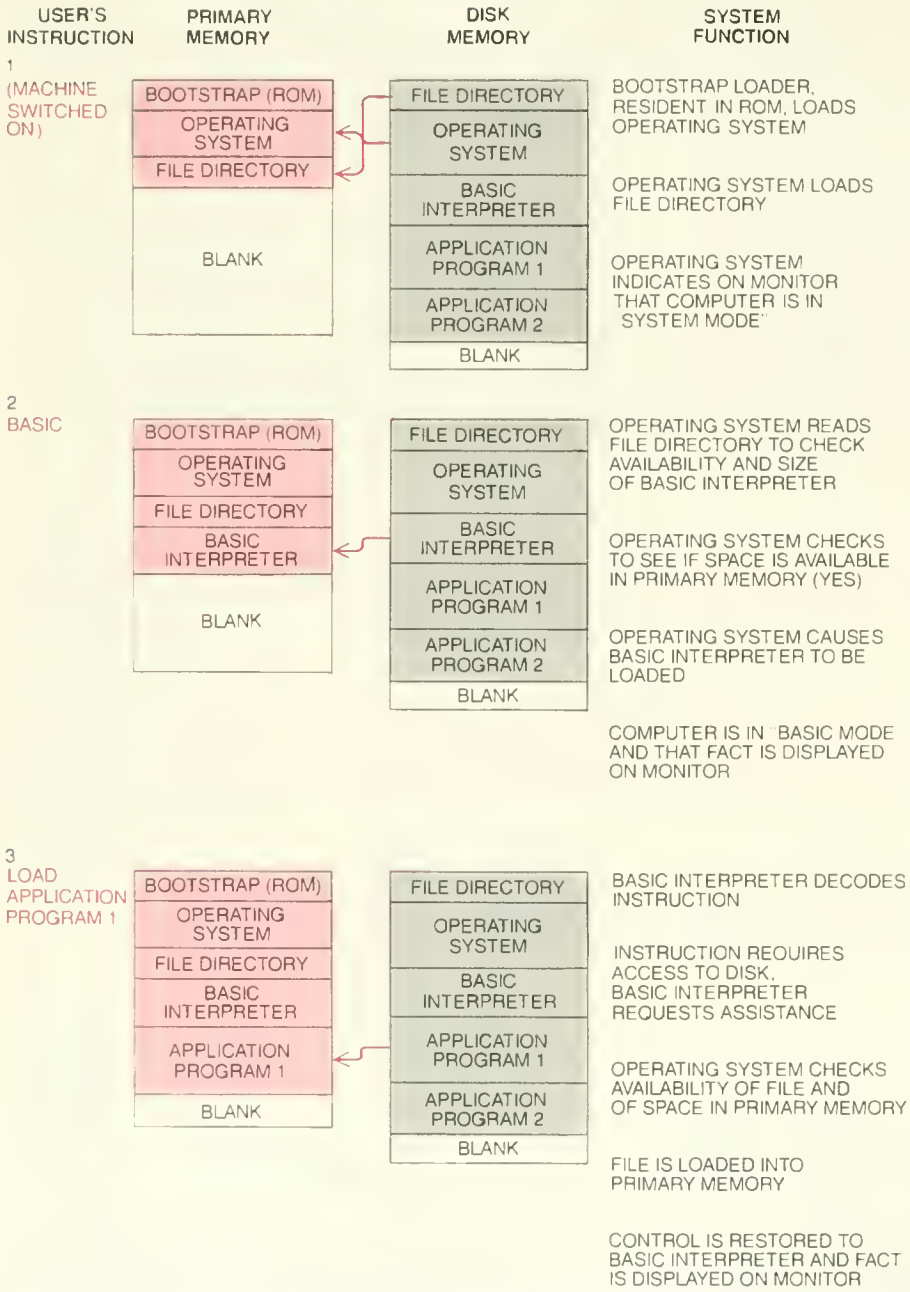

FUNCTIONS OF THE OPERATING SYSTEM are illustrated by the successive events required to load an application program. Switching the computer on (*1*) actuates a bootstrap program that loads the operating system into the primary memory. The operating system transfers a file directory from the disk memory to the primary memory; in the file directory is listed the address, or position, of every program and data file recorded on the disk. In response to the next instruction (*2*) the operating system finds the Basic interpreter on the disk and, after making certain there is enough space for it, loads it into the primary memory; the user is notified that the interpreter is ready. (Some personal computers perform step *2* automatically as part of the switching-on sequence.) The operating system is called on to load the application program itself (*3*). Now, with the interpreter again in control, the application program can be run. Output will be new data file in primary memory, which can be transferred to disk storage.

Output

The primary output medium for a personal computer is a visual display, usually on a cathode-ray tube: either a monitor supplied with the computer or the purchaser's own television screen. Flat-panel displays that exploit liquid-crystal or gas-discharge technology are beginning to be competitive, particularly for small, portable systems. The character images needed for the display of text are stored as patterns of dots in a special ROM called a character generator. The clarity of the text depends on the number of dots employed in forming each character. A typical monitor can display 24 lines of text, each line of which has a maximum of 80 characters.

The display of graphic images, whether they are engineering drawings, graphs or moving targets in a video game, calls for complex software and for large amounts of memory. A detailed drawing or a smooth curve on a graph requires a high-resolution image. Resolution is determined by the number of pixels (picture elements) that can be addressed by the computer. A 280-by-192-pixel image in black and white fills more than 50 kilobits of RAM capacity, whereas a 128-by-48 image needs only about six kilobits. Many personal computers can generate images in color, which can raise the memory requirement by a factor of four or more. A high-resolution image, particularly one

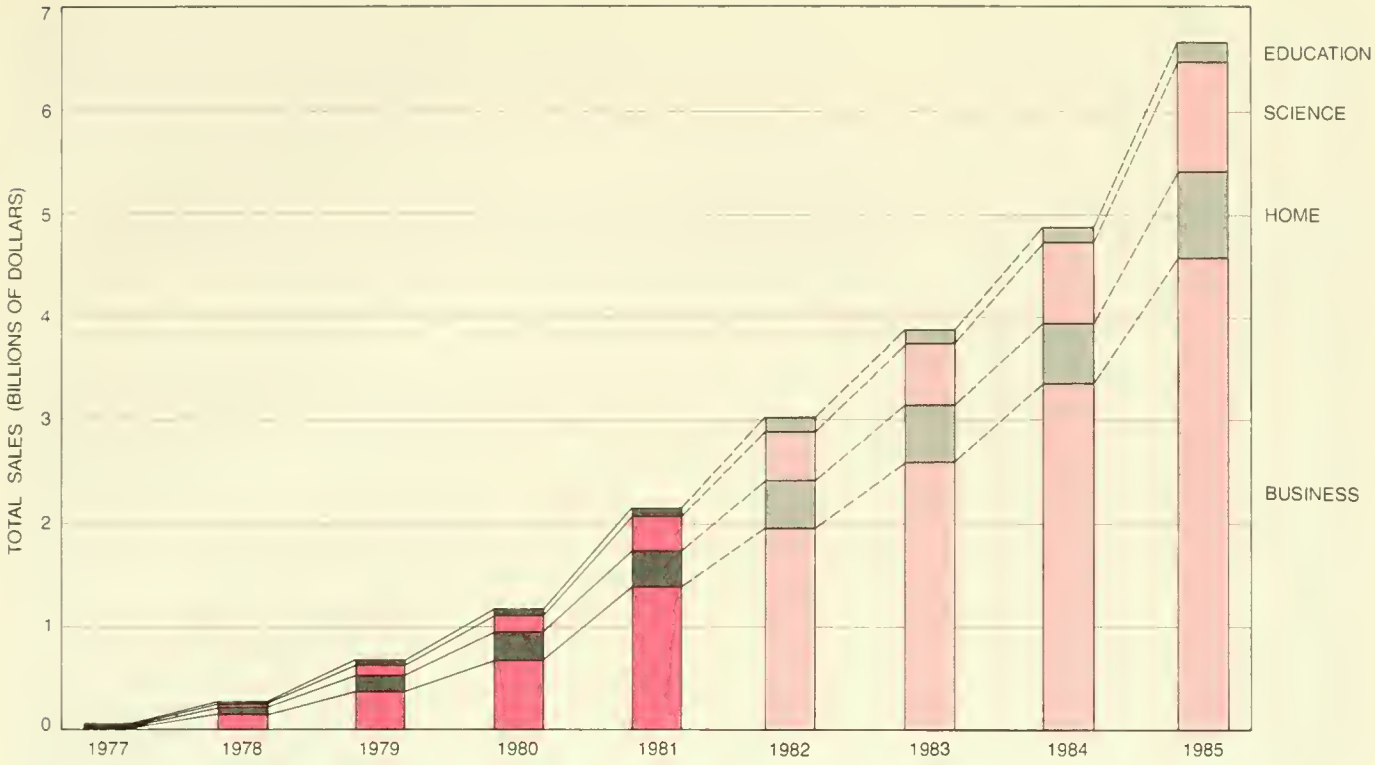

PERSONAL-COMPUTER MARKET is expected to continue its exponential growth. The bars give the value of each year's sales of personal computers, as estimated and as projected by the authors, for the market's four segments: business, home, science and education.

in color, can be displayed clearly only on a monitor.

For many purposes a printed copy of the computer's output is desirable. There are a number of different kinds of printer, which vary widely in price, speed and the quality of the text they turn out. Thermal printers, which cost less than $500, burn an image into a special paper at a rate of some 50 characters per second. Dot-matrix printers cost between $400 and $1,500 and can be very fast: as many as 200 characters per second. An array of from five to 18 tiny wires is swept across the paper. Signals from the computer drive the wires against an inked ribbon, leaving a pattern of dots on the paper. The quality of the characters thus formed depends largely on the size of the dot matrix available for each character; the array of dots is commonly either five by seven or seven by nine. With suitable control programs and enough memory capacity the dot-matrix printer can generate graphic images in black and white or in color.

Most thermal and dot-matrix printers generate text that is readable but hardly elegant. "Letter quality" printing calls for more expensive devices more closely related to a typewriter. One such device is the daisy-wheel printer, which costs at least $750 and can print up to 55 characters per second. The printing head is a rotating hub with 96 radial arms or more, each arm carrying a letter or other character. As the daisy wheel moves across the paper, signals from the computer spin the wheel and actuate a hammer that drives the proper arm against the inking ribbon.

Software

Although the hardware of a computer ultimately determines its capacity for storing and processing information, the user seldom has occasion to deal with the hardware directly. A hierarchy of programs, which together constitute the software of the computer, intervenes between the user and the hardware.

The part of the software that is most closely associated with the hardware is the operating system. To understand the kind of tasks done by the operating system, consider the sequence of steps that must be taken to transfer a file of data from the primary memory to disk storage. It is first necessary to make certain there is enough space available on the disk to hold the entire file. Other files might have to be deleted in order to assemble enough contiguous blank sectors. For the transfer itself sequential portions of the file must be called up from the primary memory and combined with "housekeeping" information to form a block of data that will exactly fill a sector. Each block must be assigned a sector address and transmitted to the disk. Numbers called checksums that allow errors in storage or transmission to be detected and sometimes corrected must be calculated. Finally, some record must be kept of where the file of information has been stored.

If all these tasks had to be done under the direct supervision of the user, the storage of information in a computer would not be worth the trouble. Actually the entire procedure can be handled by the operating system; the user merely issues a single command, such as "Save file." When the information in the file is needed again, an analogous command (perhaps "Load file") begins a sequence of events in which the operating system recovers the file from the disk and restores it to the primary memory.

In most instances an application program is written to be executed in conjunction with a particular operating system. On the other hand, there may be versions of an operating system for several different computers. Ideally, then, the same application program could be run on various computers, provided they all had the same operating system; in practice some modification is often necessary.

The microprocessor recognizes only a limited repertory of instructions, each of which must be presented as a pattern of binary digits. For example, one pattern might tell the processor to load a value from the primary memory into the internal register called an accumulator and another pattern might tell the machine to add two numbers already present in the accumulator. It is possible to write a program in this "machine language," but the process is tedious and likely to result in many errors.

The next-higher level of abstraction is an "assembly" language, in which sym-

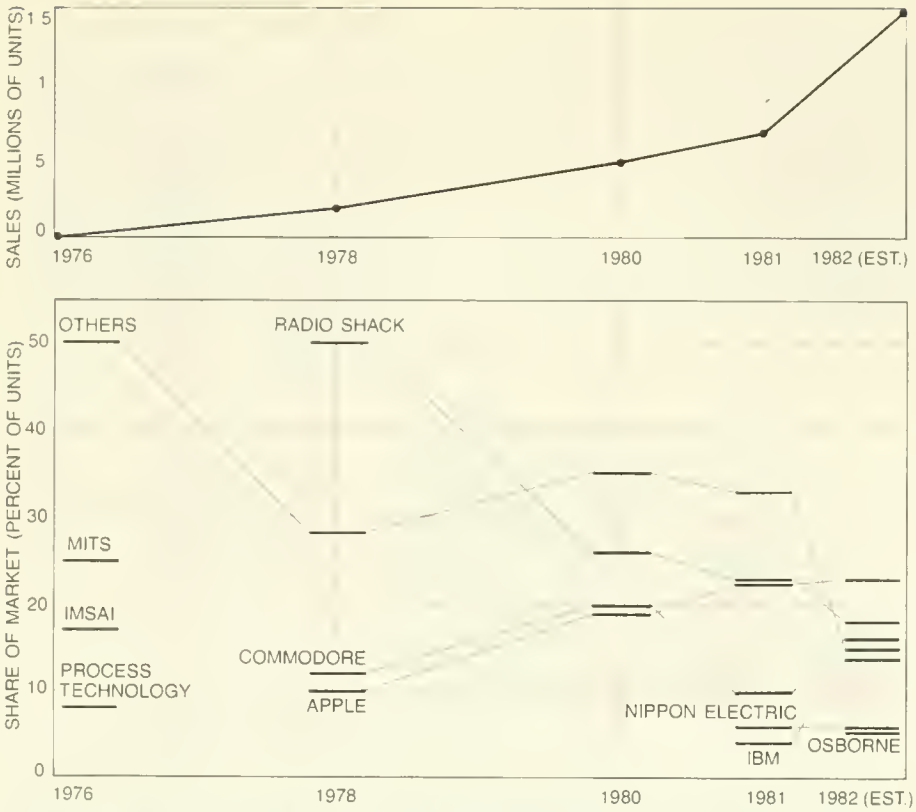

ANNUAL SALES of personal computers have increased 100-fold in six years, more than doubling in the past year (*top*). The companies that pioneered in the industry failed to survive its first years. They were supplanted by companies whose products appeal to wider market (*bottom*).

bols and words that are more easily remembered replace the patterns of binary digits. The instruction to load the accumulator might be represented LOADA and the instruction to add the contents of the accumulator might be simply ADD. A program called an assembler recognizes each such mnemonic instruction and translates it into the corresponding binary pattern. In some assembly languages an entire sequence of instructions can be defined and called up by name. A program written in assembly language, however, must still specify individually each operation to be carried out by the processor; furthermore, the programmer may also have to keep track of where in the machine each instruction and each item of data is stored.

A high-level language relieves the programmer of having to adapt a procedure to the instruction set of the processor and to take into account the detailed configuration of the hardware. Two quantities to be added can simply be given names, such as X and Y. Instead of telling the processor where in primary memory to find the values to be added, the programmer specifies the operation itself, perhaps in the form $X + Y$. The program, having kept a record of the location of the two named variables, generates a sequence of instructions in machine language that causes the values to be loaded into the accumulator and added.

There are two broad classes of programs, called interpreters and compilers, that translate into machine code a program written in a higher language. A program written in an interpreted language is stored as a sequence of high-level commands. When the program is run, a second program (the interpreter itself) translates each command in turn into the appropriate sequence of machine-language instructions, which are executed immediately. With a compiler the entire translation is completed before execution begins. An interpreter has the advantage that the result of each operation can be seen individually. A compiled program, on the other hand, generally runs much faster since the translation into machine language has already been done.

Fortran was one of the earliest high-level languages and is now available in several versions (or dialects). Fortran programs are compiled; their main applications are in the sciences and mathematics. The most widely employed high-level language for personal computers is Basic, which was developed in the 1960's by workers at Dartmouth College. Basic was originally intended as an introductory language for students of computer programming, but it is now employed for applications of all kinds. Most versions of Basic are interpreted. There are dozens of other high-level languages that can be executed by a microcomputer. The choice of a language for a particular program is often based on the nature of the problem being addressed; the language called Lisp, for example, is favored by many investigators of artificial intelligence. Considerations of personal programming style also have an influence: the language Pascal has been gaining popularity in recent years because it is said to encourage the writing of programs whose underlying structure is clear and can be readily understood.

Application Programs

Application programs are the ones that ultimately determine how effective a computer is in meeting human needs. For this reason it is likely that the owner of a personal computer will eventually invest more in software than in hardware. The investment can be made either by buying programs or by spending the substantial amount of time needed to write them. Unless one wants to do intensive programming the breadth of a system's software base (the number of applications supported) and its depth (the number of different programs available for each application) should be significant considerations in the selection of hardware.

A thriving cottage industry supplying application programs has evolved. Many programs are highly specialized. There are programs, for example, for generating a Federal income-tax return or (in conjunction with the necessary instrumentation) for analyzing thousands of blood samples per hour or for designing a bridge. Other programs have more general applications. Word-processing software is a prime example: it facilitates the writing and editing of documents of any kind, from letters and memorandums to magazine articles such as this one.

The most popular single program for personal computers is called VisiCalc and is distributed by VisiCorp. It is an "electronic worksheet." The program lays out in the computer's memory and displays on its screen a table 63 columns wide and 254 rows deep. The user "scrolls" the worksheet right and left or up and down to bring different parts of it into view. Each position (that is, each intersection of a column and a row) on the screen corresponds to a record in memory. The user sets up his own matrix by assigning to each record either a label, an item of data or a formula; the corresponding position on the screen displays the assigned label, the entered datum or the result of applying the formula.

Consider a simple example. A company comptroller might enter the label *Cash* in the record corresponding to Column *B*, Row 1 (position *B*1), *Reserves* at *C*1 and *Total* at *D*1. He might then enter \$300,000 at *B*2, \$500,000 at *C*2 and the formula + *B*2 + *C*2 at position *D*2. The

screen will show $800,000 at *D*2. If the comptroller changes the *B*2 entry to $200,000, the program will reduce the total displayed at *D*2 to $700,000. Moreover, what is entered in records *B*2 and *C*2 need not be primary data; it can be a function of data held in other records.

The Industry

The evolution of the small personal computer followed, perhaps inevitably, from the advent of the microprocessor. It was in 1971 that the Intel Corporation succeeded in inscribing all the elements of a central processing unit on a single integrated-circuit chip. That first microprocessor had only a four-bit word size, but within a year Intel produced an eight-bit processor and in 1974 there was an improved version, the Intel 8080. Small companies soon combined the 8080 with memory chips and other components to produce the first programmable microcomputers for industrial control and similar specialized applications. In 1975 a device flexible enough to be considered the first commercially available personal computer was developed by MITS, Inc. It was called the Altair 8800, and the basic system sold, primarily to hobbyists, for $395 in kit form and for $621 assembled. At the time the least expensive minicomputer cost about $6,000.

The Altair is no longer made. As a matter of fact one irony of the personal-computer industry, whose annual sales have increased by a factor of 100 in just six years, is that pioneering firms such as MITS, the IMSAI Manufacturing Corporation and the Processor Technology Corporation failed to survive the initial phase. Their products were bought primarily by hobbyists: people with deep curiosity about computers and in most cases with some previous knowledge of electronics, who were willing—indeed eager—to grapple with the hardware. The companies that supplanted the pioneers and captured a major share of the market by 1978 were Radio Shack, Commodore Business Machines and Apple Computer Inc. They saw the potential of a wider market in business and in the home; they offered "plug in" systems that were more accessible to people without computer training. The success of the second-generation companies alerted established mainframe manufacturers such as the International Business Machines Corporation and the Burroughs Corporation and makers of minicomputers such as the Digital Equipment Corporation and the Hewlett-Packard Company to the fact that their traditional markets might be eroded by the personal computer; the established companies then came into the field. New companies continue to be attracted to the industry.

The personal-computer market can be divided into four segments: business, home, science and education. The business segment has already become by far the largest one. In 1981 it accounted for 385,000 unit sales (55 percent of total sales) with a retail value of $1.4 billion (64 percent of the total value). There are 14 million businesses in the U.S., even the smallest of which is a potential buyer of a personal computer. Perhaps more important, there are some 36 million white-collar workers in the U.S., and a large fraction of them may eventually be working with a small computer of some kind.

The personal computer is currently best suited to the needs of small companies and of independent professionals such as lawyers and physicians. Larger organizations, however, are slowly coming to the concept of individual computer-centered work stations, which can be linked to one another and to central facilities (large memory units and

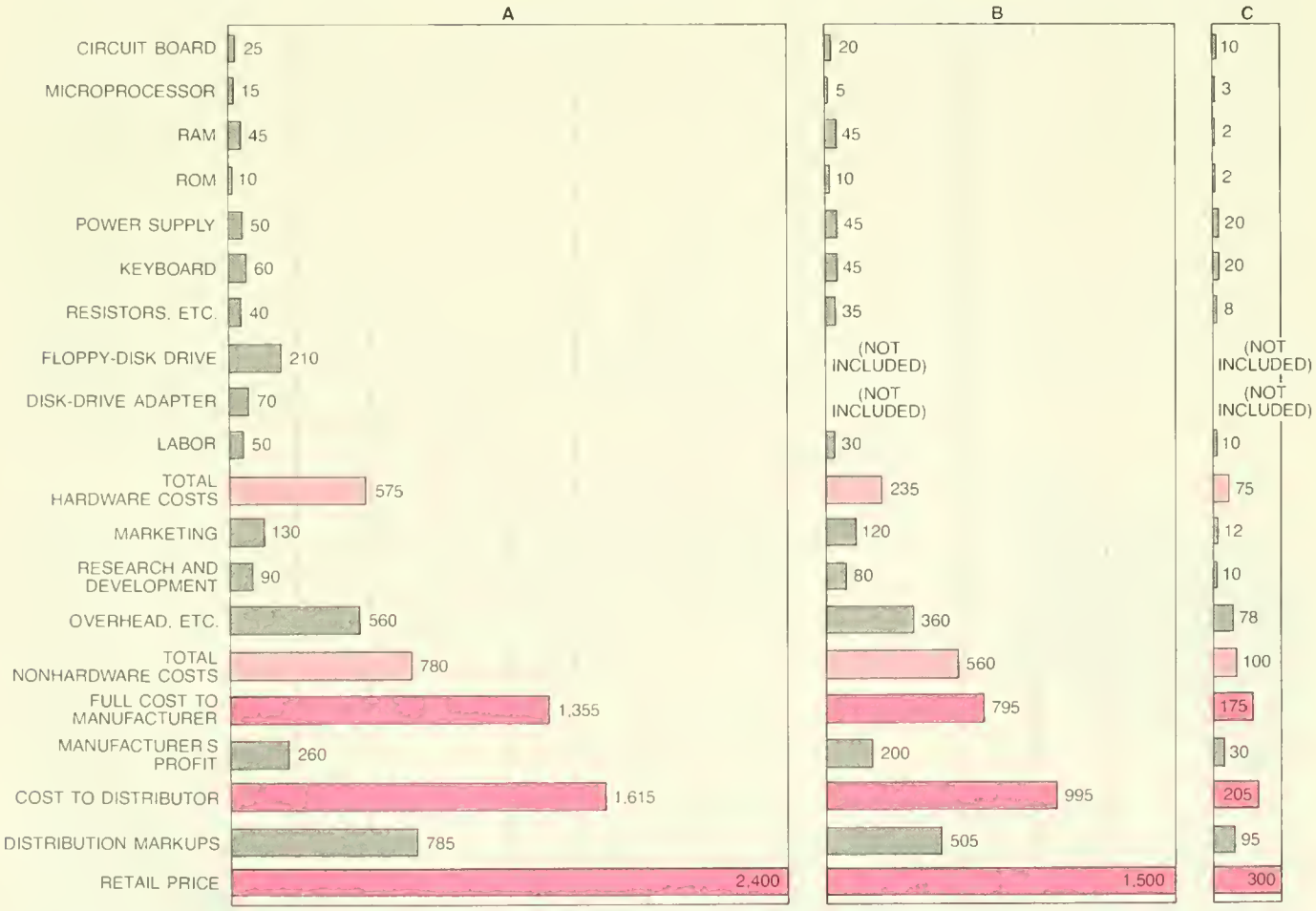

RETAIL PRICE of a personal computer reflects the cost to the manufacturer of the hardware components, labor and other nonhardware costs, the manufacturer's profit and the distributors' markups. Here these incremental costs have been estimated for three categories: a relatively high-cost, high-performance personal computer (*A*), a middle-level model (*B*) and an inexpensive, low-performance one (*C*).

printers, for example) by local-area networks [see "The Mechanization of Office Work," by Vincent E. Giuliano; SCIENTIFIC AMERICAN, September]. Personal computers are already powerful enough to handle most work-station tasks, and networks are under development. By 1985 personal-computer networks will be in operation in many business organizations.

The home-computer segment, which is the most visible and well-publicized one, in 1981 accounted for 175,000 sales with a value of $350 million. Most of the units were bought for recreation (primarily for playing video games), but they also serve as powerful educational aids for children, as word processors, electronic message centers and personal-finance tools. A broad range of new applications will be made possible by software now under development. The average cost of a complete home system is expected to fall from about $2,000 now to perhaps $1,000 in 1985 and $750 in 1990.

The science segment accounted for 105,000 unit sales in 1981 with a value of $336 million. Computers intended for scientific and other technical applications tend to be more powerful than other personal computers and to have components that facilitate their being linked to analytical and sensing instruments. The market is therefore characterized by products with specialized hardware and an array of specialized programs.

The education segment is potentially very large, but it is critically dependent on the availability of funds; currently money is scarce for public-school systems. Nevertheless, in 1981 educational institutions bought 35,000 personal computers with a value of $98 million. Computer-assisted instruction involves the student in a lively interaction with subject matter in almost any field of study and allows the individual to proceed at his own pace. The ability to work with a computer is coming to be considered a necessary basic skill and even some programming ability may soon be required in many occupations; clearly the place to acquire such skills is in elementary and secondary school. Reasoning that a student trained with the computer of a particular manufacturer is likely someday to be a purchaser of that brand, Commodore has offered schools and colleges three machines for the price of two; Apple has proposed donating personal computers to U.S. primary and secondary schools.

Major Manufacturers

The industry leaders (in terms of estimated sales in 1982) are Apple, Radio Shack, Commodore and IBM. Although all of them are making a major effort to capture the largest share of the business market possible, they are trying to accommodate other segments as well.

The company with the largest sales, not only in the U.S. but also worldwide, is Apple, whose first prototype was built in a garage in 1976. The company's first four years were financed by private investment and venture capital; it went public in 1980, but 64 percent of its stock is still held by insiders. Apple's sales in 1981 amounted to $335 million, 2.9 times as much as the year before, and its earnings were $39.4 million, 3.4 times as much as in 1980; it claimed 23 percent of the U.S. market, and U.S. sales accounted for only 76 percent of its total sales. Much of Apple's success is attributed to the company's policy of encouraging venders of software and peripheral equipment to develop and sell products that are compatible with Apple computers. For example, more than 11,000 application programs are available for Apple computers, 95 percent of them developed by independent venders. All three models of the Apple that are currently on sale are based on the same eight-bit microprocessor.

Radio Shack, which since 1963 has been owned by the Tandy Corporation, was a retailer and manufacturer of electronic products long before it went into computers, which today account for about a fifth of its volume. Although its sales have risen steadily, its share of the market has decreased from 50 percent in 1978 to an estimated 22 percent this year. Radio Shack has a broad line of computer products, including many that are manufactured internally, and exceptionally good distribution: in addition to its 8,000 full-line electronics stores there is a network of domestic and foreign computer centers that handle sales, leasing, service and training. The company's software is developed both internally and by other venders.

Commodore is a Canadian company that began in 1958 as a dealer in typewriters and in 1976 acquired MOS Technology, the original manufacturer of the microprocessor that is still used in Apple and Atari computers. Commodore has more sales outside the U.S. than any other company, and it has 65 percent of the European market. It has a broad line of inexpensive products (with one minimal model at $150) and has done well in the education segment.

IBM, the world's largest supplier of data-processing equipment, has long dominated the market for mainframe computers but had not done as well with smaller computers before entering the personal-computer field in mid-1981. It captured a substantial share of the market (an estimated 14 percent this year) with remarkable speed. The strategy was to rely heavily on outside sources not only for software, distribution and service but also for hardware: the IBM personal computer's disk drive is supplied by the Tandon Corporation, the monitor is from Taiwan and the printer is from Japan. The keyboard is supplied by IBM—and so is the brand name. IBM has established a publishing house that solicits new software programs from outside authors.

IBM's success has interesting implications for the future of the personal-computer business. The industry is volatile. American companies such as the Xerox Corporation and Atari, Inc., and a number of Japanese manufacturers (notably the Nippon Electric Co., Ltd.) are in a position to overtake the leaders. New entrants are in the wings. In evaluating their prospects one must consider what the requirements are for commercial success. What is clearly not mandatory, to judge from IBM's strategy, is established manufacturing capability. Rather, the fundamental requirements would seem to be the financial resources to buy the necessary components and the ability to market a product successfully and distribute it rapidly over a wide area.

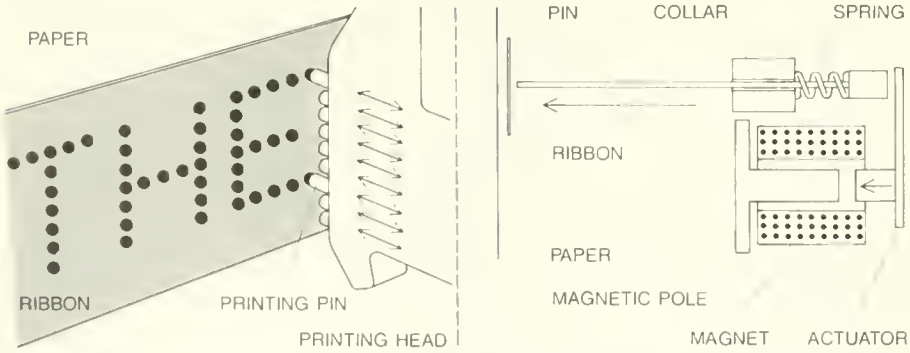

DOT-MATRIX PRINTER is relatively inexpensive, fast (up to 200 characters per second) and flexible: it can generate compressed, expanded or bold characters or even graphic images, depending on the commands it receives from the computer. The printing head is a vertical array of pins that are fired selectively, as the head is swept across the paper, to press an inked ribbon against the paper and thereby form a pattern of dots (*left*). Here each capital letter is a subset of a matrix seven dots high and five dots wide; two more pins are available to form the descenders of lowercase letters such as *p*. The pins are fired by individual solenoids (*right*). The mechanism illustrated here is that of a dot-matrix printer made by Epson America, Inc.

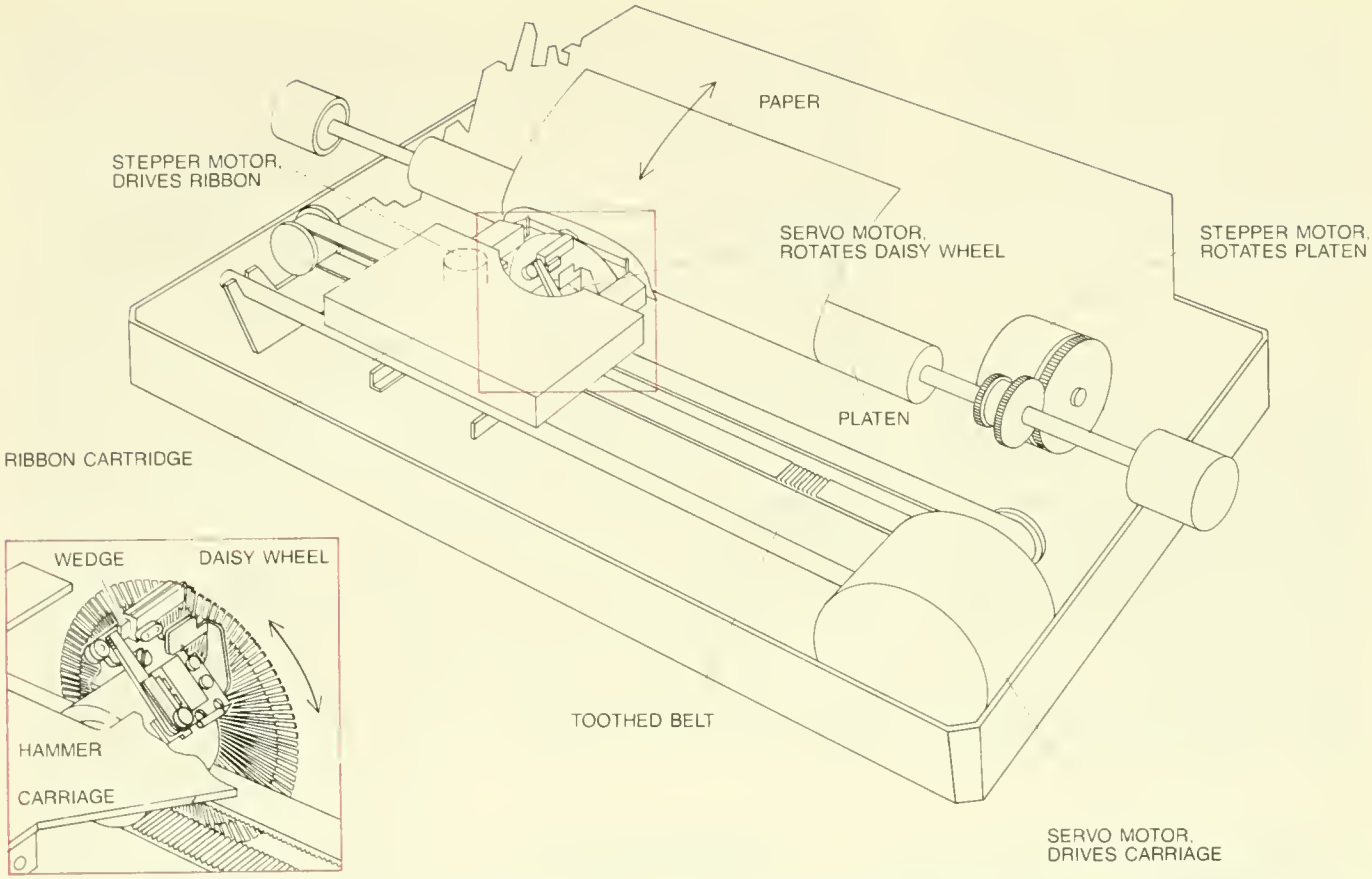

DAISY-WHEEL PRINTER produces "letter quality" copy at a rate of from 20 to 55 characters per second. This is a schematic representation of a Qume Corporation printer. The printing wheel has a plastic hub around which are arrayed 96 (in some models 130) radial spokes; a letter, number or other symbol is molded into the end of each spoke. In response to signals from the computer the wheel is rotated either clockwise or counterclockwise to bring the proper symbol into position and is stopped; the hammer strikes (with an energy proportionate to the area of the symbol: much harder, say, for a W than for a comma), driving the sliding wedge against the end of the radial arm to press the inked ribbon against the paper; the carriage and ribbon advance as the wheel is spun to bring the next symbol into position.

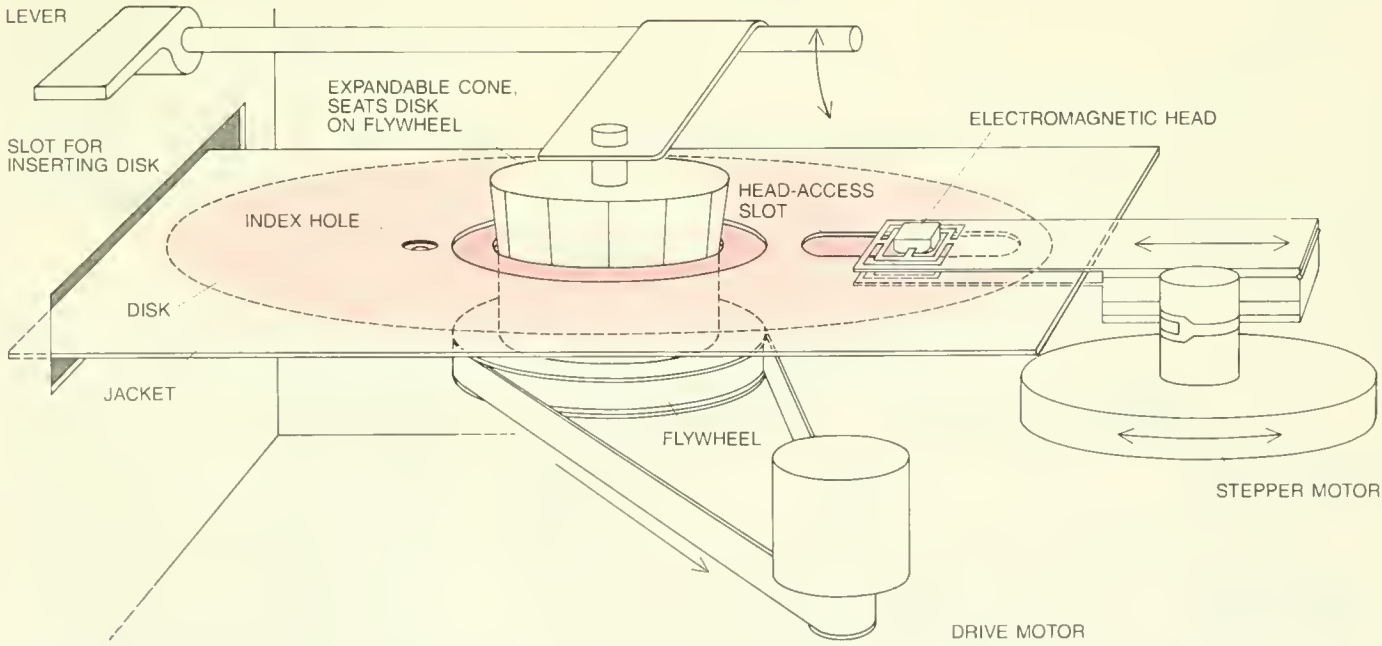

FLOPPY-DISK SYSTEM records large quantities of information on a flexible plastic disk coated with a ferromagnetic material. The disk rotates at 300 revolutions per minute in a lubricated plastic jacket. An electromagnetic head is moved radially across the surface of the disk by a stepper motor to a position over one of the concentric tracks where data are stored as a series of reversals in the direction of magnetization. The head can read or write: sense the reversals to retrieve information or impose magnetization to store information. An index mark, whose passage is sensed by a photoelectric device, synchronizes the recording or reading with the rotation of the disk. This is a schematic drawing of a double-sided disk drive made by Qume. There are two gimballed heads, which read and write information on both sides of the $5\frac{1}{4}$-inch disk. On each side of the disk some 160 kilobytes of information can be stored in 40 concentric tracks.

Many organizations, including some whose present business has nothing to do with electronics, have such capabilities and will be able to acquire technical expertise as it is needed. Organizations as disparate as CBS and Coca Cola, as Time-Life and the Prudential Insurance Co., have the resources and the access to marketing and distribution facilities that could enable them to enter the personal-computer market soon.

Distribution

Large computers are sold by the manufacturer's own sales staff, which deals directly with the individual or the organization planning to use the system. The profit margin on a personal computer is not large enough to warrant a direct-sales force of this kind. A number of other channels of distribution have therefore been developed, some by the manufacturers and some by retailing entrepreneurs.

Independent retailers who operate a single store have had a hard time with personal computers. They can order only limited quantities of a product and they tend to be too thinly capitalized to compete vigorously. They have been supplanted by franchised retail chains such as Computerland, which sold $200 million worth of computers and accessories in 1981. Such chains of stores offer the products of a number of manufacturers. They can afford a technical staff to advise the buyer and can provide long-term maintenance and servicing. Less specialized retail chains that deal in such electronic products as stereo components have added personal computers to their inventories. The lack of computer expertise in electronics stores has been a handicap. As the reliability of hardware improves and software becomes more standardized, however, and as Japanese companies (which have strong ties to the electronics chains) come into the market, such stores are likely to become a major channel of distribution.

Department stores have generally not had much success in selling personal computers. For one thing, they cannot provide sustained maintenance. Moreover, one study found that someone who buys a personal computer has made an average of four visits to a store, lasting for a total of seven hours; department stores are not accustomed to that kind of selling effort. Office-equipment stores, on the other hand, have contacts in their local business market and can provide the needed sales and service expertise. Sears has recently opened specialized stores in large cities to handle only personal computers, word processors and auxiliary equipment.

Manufacturers themselves sponsor a variety of outlets for their products. Radio Shack depends largely on its own chain of retail stores. IBM, Xerox and Digital Equipment are opening their own stores to supplement other channels of distribution. Texas Instruments maintains catalogue showrooms, where a customer can inspect the company's products, make a choice and leave an order that is filled from a central warehouse. Manufacturers may also find that a direct-sales staff is justified for bulk sales to government agencies, large corporations and academic institutions. Radio Shack and IBM have established such staffs. They run the risk of antagonizing retail dealers who might otherwise compete for these large sales.

Mail-order companies have been a significant presence in the personal-computer field. They handle large quantities and are able to offer large discounts but no on-site maintenance and servicing support. Moreover, full-service dealers are less likely to handle a product that is widely available at a discounted price.

A new kind of outlet that is peculiar to the personal-computer field is the "value-added house." It buys hardware from the manufacturer, buys or develops peripheral equipment and software for a specific application or a specific kind of user and offers a complete package. The services of a value-added house can be particularly attractive to an organization with little computer expertise.

Who Needs It?

In spite of the implications of the word "personal" and the popular image of family members gathered around the home computer to do schoolwork, balance the checkbook and shoot down spacecraft, it is clear that most personal computers are being bought by businesses and other organizations. That does not necessarily make the computer any less personal; it may still be dedicated to the needs of one individual. More than a fifth of the U.S. labor force is engaged in office work; office costs constitute more than half of the total costs incurred by many companies, and those costs are increasing at a rate exceeding 7 percent per year. Personal computers can increase the productivity of the office and of white-collar workers. In an organization that already has a

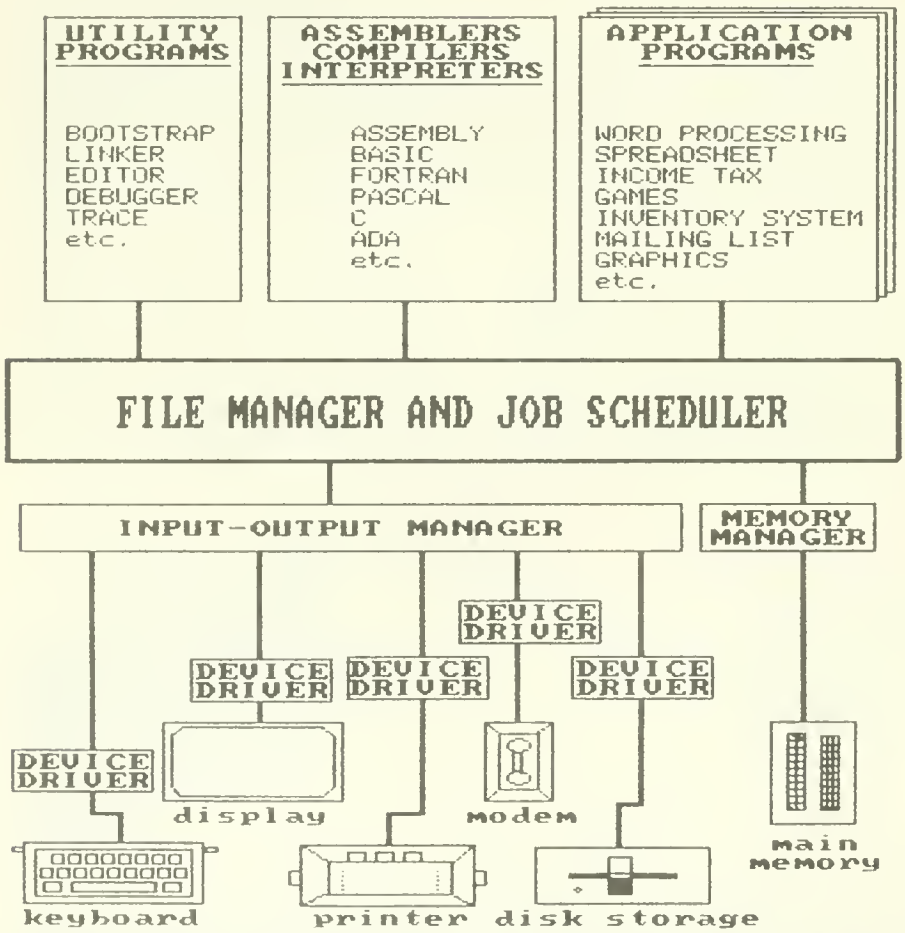

"BUSINESS GRAPHICS" SOFTWARE greatly increases the utility of personal computers and is responsible for much of their growing acceptance. This chart, a version of the illustration on page 91, was generated on a personal computer with Execu-Vision, a program distributed by Digital Systems Associates, and was printed out by a dot-matrix printer. The task took about 15 minutes. Rapid preparation of such charts, as well as graphs, tables and even drawings, with low-cost equipment is of major value in the preparation of reports and presentations.

mainframe computer personal computers can lighten the load on the central facility, which can spend more time on "batch" data-processing tasks such as payroll or inventory control. Personal computers make possible the mechanization of a wide range of office tasks that have been handled with typewriters, calculators and photocopying devices.

Managers in business are said to devote more than 80 percent of their time to preparing for and attending meetings and "presentations," to collecting information or to making decisions based on analysis of alternatives. Personal computers have impact on all three activities. New "business graphics" programs make it possible to quickly generate slides and printed material for meetings. Winchester disks and programs for the storing and management of large data bases help the individual to examine a large body of information, discern trends and detect problems. Data-manipulation programs such as VisiCalc enable the manager to evaluate alternative courses of action, to ask the kind of question that begins "What if" and to get an answer almost instantaneously. Such tasks can in principle be accomplished with a centralized mainframe computer, but they are done more efficiently with a personal computer, with far less expenditure of capital and by individuals who have had no technical training.

All of this having been said, the fact remains that the exact role to be filled by personal computers in an organization often cannot be foreseen. Many organizations have found that rather than meeting a known need, the presence of a personal computer identifies a previously unidentified need (much as the availability of a physician may bring to light a previously unrecognized health problem) and then meets that need.

Whether an individual needs or will profit from or enjoy his own personal computer is harder to say. For some professionals, to be sure, the advantage of having a computer always ready to hand is quite clear. Other people may buy one essentially because it is available and affordable, with the applications to be defined later. Specific applications will flow from the capabilities of the computer. A computer keeps track of things and sorts things. It calculates. It can marshal a large body of data, change one variable or more and see what happens. It can indeed balance a checkbook (rather, the owner can balance his checkbook with the help of the computer), list appointments or be linked to a home-security system. None of these applications by itself would justify the purchase of a computer. With curiosity and ingenuity, however, the owner of a personal computer will define his own applications, shaping the system to his own personality and taste.

The Authors

HOO-MIN D. TOONG and AMAR GUPTA are electrical engineers whose work centers on how computer systems and human organizations affect each other. Toong is assistant professor of management at the Sloan School of Management at the Massachusetts Institute of Technology and head of the digital-systems laboratory at the Center for Information Systems Research of M.I.T. His degrees in electrical engineering and computer science from M.I.T. include a B.S. (1967), an M.S. (1969) and a Ph.D. (1974). Gupta is a postdoctoral associate at M.I.T. His B.Tech. (1974) in electrical engineering and his Ph.D. in computer technology (1980) are from the Indian Institute of Technology in Kanpur. He has also received an S.M. from M.I.T. Since 1974 he has worked for the central government of India evaluating and purchasing computer systems. For the past four years he has divided his time between India and the U.S., doing work on computer systems.

Bibliography

MICROPROCESSORS. Hoo-min D. Toong in *Scientific American*, Vol. 237, No. 3, pages 146–161; September, 1977.

PERSONAL COMPUTER REPORT. Hoo-min D. Toong and Amar Gupta. Digital Systems Associates, 1982.

BARCODE ON BACK COVER