MASSACHUSETTS INSTITUTE OF TECHNOLOGY
ARTIFICIAL INTELLIGENCE LABORATORY

AIM 239

February 1972

HAKMEM

by

M. Beeler

R.W. Gosper

R. Schroeppel

This report describes research done at the Artificial Intelligence Laboratory of the Massachusetts Institute of Technology. Support for the Laboratory's artificial intelligence research is provided in part by the Advanced Research Projects Agency of the Department of Defense under Office of Naval Research contract N00014-70-A-0362-0002.

Compiled with the hope that a record of the random things people do around here can save some duplication of effort -- except for fun.

Here is some little known data which may be of interest to computer hackers. The items and examples are so sketchy that to decipher them may require more sincerity and curiosity than a non-hacker can muster. Doubtless, little of this is new, but nowadays it's hard to tell. So we must be content to give you an insight, or save you some cycles, and to welcome further contributions of items, new or used.

The classification of items into sections is even more illogical than necessary. This is because later elaborations tend to shift perspective on many items, and this elaboration will (hopefully) continue after publication, since this text is retained in "machinable" form. We forgive in advance anyone deterred by this wretched typography.

People referred to are
from the A. I. Lab:

Marvin Minsky	Rich Schroeppel
Bill Gosper	Michael Speciner
Michael Beeler	Gerald Sussman
John Roe	Joe Cohen
Richard Stallman	David Waltz
Jerry Freiberg	David Silver

once at the A. I. Lab but now elsewhere:

Jan Kok	William Henneman
Rici Liknaitzky	George Mitchell
Peter Samson	Stuart Nelson
Roger Banks	Rollo Silver
Mike Paterson	

at Digital Equipment Corporation:

Jud Lenard	Dave Plumer
Ben Gurley (deceased)	Steve Root

elsewhere at M.I.T.:

Gene Salamin	PDP-1 hackers
Eric Jensen	Frances Yao
Edward Fredkin	

once at M.I.T., but now elsewhere:

Jackson Wright	Steve Brown
Malcolm Rayfield	

in France:

Marco Schutzenberger	Henry Cohen

at Computer Corporation of America: Bill Mann

at BBN: Robert Clements

CAVEATS:
Some of this material is very inside -- many readers will have to excuse cryptic references.

The label "PROBLEM" does not always mean exercise;
if no solution is given, it means we couldn't solve it.
If you solve a problem in here, let us know.

Unless otherwise stated, all computer programs are in PDP-6/10 assembly language.

CONTENTS, HAKMEM 140

 3 GEOMETRY, ALGEBRA, CALCULUS
 6 RECURRENCE RELATIONS
10 BOOLEAN ALGEBRA
12 RANDOM NUMBERS
13 NUMBER THEORY, PRIMES, PROBABILITY
25 AUTOMATA THEORY
26 GAMES
30 PROPOSED COMPUTER PROGRAMS
36 CONTINUED FRACTIONS
45 GROUP THEORY
45 SET THEORY
46 QUATERNIONS
48 POLYOMINOS, ETC.
51 TOPOLOGY
54 SERIES
61 FLOWS AND ITERATED FUNCTIONS
67 PI
72 PROGRAMMING HACKS
82 PROGRAMMING ALGORITHMS, HEURISTICS
87 HARDWARE

Page	Figure	
19, 20	1a, 1b	Binary integers radix i-1, i+1.
21	2	Radix i-1 fraction parts (Knuth).
31, 32	3a, 3b	Squared square, rectangle.
34	4	Square, hexagon dissection.
50	5	Hexiamond solutions.
58, 59	6a, 6b	"clock hands" series.
62	7	Binary numbers radix -2.
66	8	"C" curves.
84	9	Incremental curve drawing.

****
GEOMETRY, ALGEBRA, CALCULUS
****

ITEM 1 (Schroeppel):
(1/3)! and (2/3)! are interexpressible.
(1/4)! and (3/4)! are interexpressible.
Thus these two pairs are of dimensionality one.
(1/10)! and (2/10)! are sufficient to express (N/10)! for all N.
(1/12)! and (2/12)! are sufficient to express (N/12)! for all N.
(1/3)! and (1/4)! are sufficient to express (N/12)! for all N.
Thus the three cases above are of dimensionality two.
PROBLEM: Find some order to this dimensionality business.
The reflection and multiplication formulas:

$$Z!(-Z)! = \pi Z / \sin \pi Z$$

$$(2\pi)^{(N-1)/2} N^{-NZ-1/2} (NZ)! = Z!(Z-1/N)!(Z-2/N)! \ldots (Z-(N-1)/N)!$$

ITEM 2 (Jan Kok):
PROBLEM: Given a regular n-gon with all diagonals drawn, how many regions are there? In particular, how many triple (or N-tuple) concurrences of diagonals are there?

ITEM 3 (Schroeppel):
Regarding convergence of Newton's method for quadratic equations:
Draw the perpendicular bisector of the line connecting the two roots. Points on either side converge to the closest root.
On the line:
1 they do not converge
2 there is a dense set of points which involve division by zero
3 there is a dense set of points which loop, but roundoff error propagates so all loops are unstable
4 being on the line is also unstable (if the roots are imaginary and you are on the real axis, you may be doing exact computation of the imaginary part (0), hence stay on the line. Example: $X^2 + 1 = 0$, X0 = random real floating point number.)

ITEM 4 (Schroeppel):

By Mathlab, the discriminant of $X^4 + FX^3 + GX^2 + HX + I$ is
(as the discriminant of $AX^2 + BX + C$ is $B^2 - 4AC$):

$$- 27\,H^4 + 18\,FGH^3 - 4\,F^3H^3 - 4\,G^3H^2 + F^2G^2H^2$$
$$+ I * [144\,GH^2 - 6\,F^2H^2 - 80\,FG^2H$$
$$+ 18\,F^3GH + 16\,G^4 - 4\,F^2G^3]$$
$$+ I^2 * [- 192\,FH - 128\,G^2 + 144\,F^2G - 27\,F^4]$$
$$- 256\,I^3$$

ITEM 5:

In general, the discriminant of an n-th degree polynomial is
$\prod_{i<j} (ROOT_i - ROOT_j)^2$ = square of determinant whose i,j element
is $ROOT_j^{i-1}$. (The discriminant is the lowest degree symmetric
function of the roots which is 0 when any two are equal.)

ITEM 6 (Schroeppel):

If A is the first symmetric function of N variables
$= X + Y + Z + \ldots$
and B is the second symmetric function of N variables
$= XY + XZ + \ldots + YZ + \ldots$
(B = sum of pairs), then $X^2 + Y^2 + Z^2 + \ldots = A^2 - 2B$.
$X^3 + Y^3 + Z^3 + \ldots = A^3 - 3AB + 3C$.
$X^4 + Y^4 + Z^4 + \ldots = A^4 - 4A^2B + 2B^2 + 4AC - 4D$.

ITEM 7 (Gosper):

If f(I;X,Y,...) is the Ith symmetric function on N variables,

$$f(I;X,Y,\ldots) = \begin{cases} 0 & \text{if } I > N \\ 1 & \text{if } I = 0 \\ X*f(I-1;Y,Z,\ldots) + f(I;Y,Z,\ldots) & \text{(N-1 variables)} \end{cases}$$

The generating function is simply

$$\sum_{I=0}^{N} f(I;X,Y,Z,\ldots)*S^I = (1+XS)(1+YS)(1+ZS)\ldots$$

ITEM 8 (Schroeppel):
Solutions to $F(X) = X^3 - 3BX^2 + CX + D = 0$ are

$$B - K * \sqrt[3]{\frac{F(B)}{2} + \sqrt{[\frac{F(B)}{2}]^2 + [\frac{F'(B)}{3}]^3}} - K^2 * \sqrt[3]{\frac{F(B)}{2} + \sqrt{[\frac{F(B)}{2}]^2 + [\frac{F'(B)}{3}]^3}}$$

where K is one of the three cuberoots of 1:
$1, (-1+\sqrt{-3})/2, (-1-\sqrt{-3})/2.$

ITEM 9 (Schroeppel & Salamin):
If $X^4 + BX^2 + CX + D = 0$, then $2X = \sqrt{Z1} + \sqrt{Z2} + \sqrt{Z3}$
Z1, Z2, Z3 are roots of $Z^3 + 2BZ^2 + (B^2 - 4D)Z - C^2 = 0$.
The choices of square roots must satisfy $(\sqrt{Z1})(\sqrt{Z2})(\sqrt{Z3}) = -C$.

ITEM 10 (Salamin):
An easy solution of $-4X^3 + 3X - a = 0$ is $X = \sin((\arcsin a)/3)$.
In a similar manner, the general quintic can be solved exactly by use of the elliptic modular function and its inverse.
See Davis: Intro. to Nonlinear Differential and Integral Equations (Dover), p. 172. Unfortunately, there exists ≥ 1 typo, since his eqs. (7) and (13) are inconsistent.

ITEM 11 (Salamin):
The following operations generate one-to-one conformal mappings of Euclidean N-space onto itself.

1) Translate N-space.
2) Expand N-space about one of its points.
3) Stereographically project N-space onto an N-sphere, rotate the sphere, then project back onto N-space.

PROBLEMS:
Show that all such conformal maps are generated by these operations for any N. If the one-to-one and onto conditions are removed, then for N=2, conformal maps can be obtained by analytic functions. Show that for N>2, no new conformal maps exist.

RECURRENCE RELATIONS

ITEM 12 (Gosper & Salamin):
"the Fast Fibonacci Transform" (motivation for next item)
Define multiplication on ordered pairs

$$(A,B)(C,D)=(AC+AD+BC,AC+BD).$$

This is just $(AX+B)*(CX+D) \bmod X^2-X-1$, and so is associative, etc. We note $(A,B)(1,0)=(A+B,A)$, which is the Fibonacci iteration. Thus, $(1,0)^N = (FIB(N),FIB(N-1))$, which can be computed in log N steps by repeated squaring, for instance. FIB(15) is best computed using N = 16, thus pushing the minimal binary addition chain counterexample to 30 (Liknaitzky). (See Knuth vol. 2, p 398.) By the last formula,

$$(1,0)^{-1} = (FIB(-1),FIB(-2)) = (1,-1),$$

which, as a multiplier, backs up one Fibonacci step (further complicating the addition chain question). Observing that

$$(1,0)^0 = (FIB(0),FIB(-1)) = (0,1)$$

= the (multiplicative) identity, equate it with scalar 1. Define addition and scalar multiplication as with ordinary vectors.

$$(A,B)^{-1} = (-A,A+B)/(B^2+AB-A^2),$$

so we can compute rational functions when the denominator isn't zero. Now, by using power series and Newton's method, we can compute fractional Fibonaccis, and even $e^{(X,Y)}$ and $\log(X,Y)$. If we start with (1,0) and square iteratively, the ratio will converge to the larger root of x^2-x-1 (= the golden ratio) about as rapidly as with Newton's method.
This method generalizes for other polynomial roots, being an improvement of the method of Bernoulli and Whittaker (Rektorys, Survey of Applicable Math., p 1172). For the general second order recurrence, $F(N+1) = XF(N) + YF(N-1)$, we have the multiplication rule: $(A,B)(C,D) = (AD+BC+XAC,BD+YAC)$.

Inverse: $(A,B)^{-1} = (-A,XA+B)/(B^2+XAB-YA^2)$.

Two for the price of one: $(F(1),YF(0))(1,0)^N = (F(N+1),YF(N))$.

LINEAR RECURRENCE RELATIONS

Recurrence relation: $A_k = C_{n-1} A_{k-1} + \ldots + C_0 A_{k-n}$ (1)

with $A_0, \ldots, A_{n-1}$ given as initial values.

Consider the algebra with basis vectors

$$X^0, X^1, X^2, \ldots, X^{n-1}$$

and the identification $X^n = C_{n-1} X^{n-1} + \ldots + C_0 X^0$. (2)

Thus if U, V, W are vectors and W = U V, then componentwise

$$W_i = \Sigma_{j,k} T_{ijk} U_j V_k, \quad (3)$$

where the T's depend only on the C's. The following simple procedure yields A_k: express the vector X^k as a linear combination of the basis vectors, then set $X^m = A_m$ $(0 \le m < n)$. Computation of X^k can be done by k-n+1 applications of (2) or by computing the T's in (3) and then applying (3) O(log k) times.

PROOF: If $0 \le k < n$, X^k is already a basis vector, so we get A_k. Suppose the procedure works for $k < L$. $X^L = X^n X^{L-n}$

$$= (C_{n-1} X^{n-1} + \ldots + C_0) X^{L-n}$$
$$= C_{n-1} X^{L-1} + \ldots + C_0 X^{L-n}$$

The procedure evaluates each X^m to A_m, so X^L evaluates to

$$C_{n-1} A_{L-1} + \ldots + C_0 A_{L-n} = A_L. \quad \text{QED}$$

The same procedure will work for negative k using

$$X^{-1} = (X^{n-1} - C_{n-1} X^{n-2} - \ldots - C_1)/C_0, \quad (4)$$

the unique vector which when multiplied by X yields X^0.

Let (2) be F(X)=0 and V be the algebra constructed above. Then V is a field iff F(X) is irreducible in the field of the coefficients of V.
PROOF: Note that an element P of V is zero iff P(X)=0 mod F(X). If G(X) H(X)=F(X), DEG G,H < DEG F, then the product of two non-zero elements is zero and so V can't be a field.

Let P be an arbitrary non-zero element of V.
DEG(GCD(P,F)) $\leq$ DEG P < DEG F.
If F(X) is irreducible, then GCD(P,F)=1, so there exist Q(X), R(X) such that Q(X) P(X) + R(X) F(X) = 1.
Then Q(X) P(X)=1 mod F(X). Since P has an inverse, V is a field.

ITEM 14 (Gosper & Salamin):
Yet another way to rapidly evaluate recurrences is to observe that if F(N+1) = X*F(N) + Y*F(N-1),
then F(N+2) = (X^2+2Y)*F(N) - Y^2*F(N-2).
This rate doubling formula can be applied iteratively to compute the Nth term in about log N steps, e.g., to get the 69th term given terms 1 and 2, we form 1, 2, 3, 5, 9, 13, 21, 37, 69. This sequence is computed from right to left by iteratively subtracting half the largest possible power of 2. This is sufficient to guarantee that some term further left will differ from the left one by that same (halved) power of 2; e.g., 5, ...,21,37 have a common difference of 2^4, so that term 37 can be found from term 5 and term 21 using the fourth application of the rate doubling formula.

The rate tripling formula is F(N+3) = (X^3+3XY)*F(N) + Y^3*F(N-3).
For the K-tupling formula: F(N+K) = P(K)*F(N) + Q(K)*F(N-K)
P(K+1) = X*P(K) + Y*P(K-1) (the same recurrence as F)
Q(K+1) = -Y*Q(K)
P(1) = X Q(1) = Y
P(0) = 2 Q(0) = -1

$$Q(K) = -(-Y)^K$$

$$P(K) = 2(-Y)^{K/2} * T(K; X/\sqrt{-4Y})$$ where T(K;X) is the Kth Chebychev polynomial = cos (K arccos X)

If A(I), B(I), and C(I) obey the same second order recurrence,

$$\begin{bmatrix} A & B \\ I & I \end{bmatrix}^{-1} \begin{bmatrix} C \\ I \end{bmatrix} \qquad (I)$$

$$\begin{bmatrix} A & B \\ J & J \end{bmatrix} \quad \begin{bmatrix} C \\ J \end{bmatrix}$$

is independent of I and J, provided the inverse exists.
(This is true even if coefficients are not constant, since any two independent sequences form a basis.)

Plugging in F and P as defined above, we get an expression for the Nth term of the general second order recurrence in terms of P(N) and P(N+1):

$$\begin{bmatrix} P(N) & P(N+1) \end{bmatrix} \begin{bmatrix} P(0) & P(1) \\ P(1) & P(2) \end{bmatrix}^{-1} \begin{bmatrix} F(0) \\ F(1) \end{bmatrix} = F(N).$$

Setting X = Y = 1, we get FIB(N) = (2P(N+1)-P(N))/5, which is a complex but otherwise square root free closed form. ($\sqrt{-4} = 2i$)

With constant coefficients, the invariance (I) implies:

$$\begin{bmatrix} A & A \\ P+I & P+J \end{bmatrix} \begin{bmatrix} A & A \\ Q+I+K & Q+J+K \\ A & A \\ Q+I+L & Q+J+L \end{bmatrix}^{-1} \begin{bmatrix} A \\ R+K \\ A \\ R+L \end{bmatrix} = A_{P-Q+R}$$

These matrix relations generalize directly for Nth order recurrences.

ITEM 15 (Chebychev):
The Nth Chebychev polynomial T(N) = T(N;x) = cos (N arccos x).
T(0) = 1, T(1) = x, T(N+1) = 2x T(N) - T(N-1).
$T(N;T(M))$ clearly = $T(NM)$. $x^N - 2^{1-N} T(N)$, whose degree is N-2, is the polynomial of degree < N which stays closest to x^N in the interval (-1,1), deviating by at most 2^{1-N} at the N+1 places where $x = \cos(K*\pi/N)$, K=0,1,...N.
Generating function: $\sum T(N)*S^N = (1-xS)/(1-2xS+S^2)$.
First order (nonlinear) recurrence:

$$T(N+1) = xT(N) - \sqrt{(1-x^2)(1-T(N)^2)}.$$

$$(T(N+1),-T(N)) = (T(1),-T(0))^N (1,0),$$

where (A,B)(C,D) = (AD+BC+2xAC,BD-AC).

ITEM 16:

$$\tan(n \arctan x) = \frac{1}{i} * \frac{(1+ix)^n - (1-ix)^n}{(1+ix)^n + (1-ix)^n}$$

BOOLEAN ALGEBRA

ITEM 17 (Schroeppel):
Problem: Synthesize a given logic function or set of functions using the minimum number of two-input AND gates. NOT gates are assumed free. Feedback is not allowed. The given functions are allowed to have X (don't care) entries for some values of the variables. P XOR Q requires three AND gates. MAJORITY(P,Q,R) requires 4 AND gates. "PQRS is a prime number" seems to need seven gates. The hope is that the best Boolean networks for functions might lead to the best algorithms.

ITEM 18 (Speciner):

N	number of monotonic increasing Boolean functions of N variables
0	2 (T, F)
1	3 (T, F, P)
2	6 (T, F, P, Q, P AND Q, P OR Q)
3	20
4	168 = 8 * 3 * 7
5	7581 = 3 * 7 * 19^2
6	7,828,354 = 2 * 359 * 10903 (Ouch!)

N from 0 to 4 suggest that a formula should exist, but 5 and 6 are discouraging. A difficult generalization: Given two partial orderings, find the number of maps from one to the other that are compatible with the ordering. A related puzzle: A partition of N is a finite string of non-increasing integers that add up to N. Thus 7 3 3 2 1 1 1 is a partition of 18. Sometimes an infinite string of zeros is extended to the right, filling a half-line. The number of partitions of N, P(N), is a fairly well understood function.
The generating function is $\sum_{n=0}^{\infty} P(n)\, x^n = 1 \Big/ \prod_{k=1}^{\infty} (1-x^k)$.
A planar partition is like a partition, but the entries are in a two-dimensional array (the first quadrant) instead of a string. Entries must be non-increasing in both the x and y directions. A planar partition of 34 would be:

```
1
3 1
3 2 2 1
7 6 4 3 1
```

Zeros fill out the unused portion of the quadrant. The number of planar partitions of n, PL(n), is not a very well understood function.
The generating function is $\sum_{n=0}^{\infty} PL(n)\, x^n = 1 \Big/ \prod_{k=1}^{\infty} (1-x^k)^k$.
No simple proof of the generating function is known. Similarly, one can define cubic partitions with entries in the first octant, but no one has been able to discover the generating function. Some counts for cubic partitions and a discussion appear in Knuth, Math. Comp. 1970 or so.

ITEM 19 (Schroeppel):
The 2-NOTs problem: Synthesize a black box which computes NOT-A, NOT-B, and NOT-C from A, B, and C, using an arbitrary number of ANDs and ORs, but only 2 NOTs.

Clue: (Stop! Perhaps you would like to work on this awhile.)
Lemma: Functions synthesizable with one NOT are those where the image of any upward path (through variable space) has at most one decrease (that is, from T to F).

ITEM 20 (Roger Banks):
A Venn diagram for N variables where the shape representing each variable is convex can be made by superimposing successive M-gons (M = 2, 4, 8, ...), every other side of which has been pushed out to the circumscribing circle. If you object to superimposed boundaries, you may shrink the nested M-gons a very slight amount which depends on N.

ITEM 21 (Schroeppel & Waltz):
PROBLEM: Cover the Execuport character raster completely with the minimum number of characters. The three characters I, H and # works. Using capital letters only, the five characters B, I, M, V and X is a minimal solution. Find a general method of solving such problems.

ITEM 22 (Gosper):
PROBLEM: Given several binary numbers, how can one find a mask with a minimal number of 1 bits, which when AND-ed with each of the original numbers preserves their distinctness from each other? What about permuting bit positions for minimum numerical spread, then taking the low several bits?

ITEM 23 (Schroeppel):
(A AND B) + (A OR B) = A + B = (A XOR B) + 2(A AND B).

ITEM 24 (Minsky):
There exists a convex figure n congruent copies of which, for any n, form a Venn diagram of 2^n regions.

RANDOM NUMBERS

ITEM 25 (Schroeppel):
Random number generators, such as Rollo Silver's favorite, which use SHIFTs and XORs, and give as values only some part of their internal state, can be inverted. Also, the outputs may often be used to obtain their total internal state. For example, 2 consecutive values from Rollo's suffice to allow prediction of its entire future. Rollo's is:

```
RANDOM: MOVE A,HI       ;register A gets loaded with "high" word
        MOVE B,LO       ;register B gets loaded with "low" word
        MOVEM A,LO      ;register A gets stored in "low" word
        LSHC A,35.      ;shift the 72-bit register AB left 35
        XORB A,HI       ;bitwise exclusive-or of A and HI
                                replaces both
```

This suggests a susceptibility to analysis of mechanical code machines.

See LOOP DETECTOR item in FLOWS AND ITERATED FUNCTIONS section.

ITEM 26 (? via Salamin):
A mathematically exact method of generating a Gaussian distribution from a uniform distribution: let x be uniform on [0,1] and y uniform on $[0,2\pi]$, x and y independent. Calculate $r = \sqrt{-\log x}$. Then r cos y and r sin y are two independent Gaussian distributed random numbers.

ITEM 27 (Salamin):
PROBLEM: Generate random unit vectors in N-space uniform on the unit sphere. SOLUTION: Generate N Gaussian random numbers and normalize to unit length.

NUMBER THEORY, PRIMES, PROBABILITY

ITEM 28 (Schroeppel):
After about 40 minutes of run time to verify the absence of any non-trivial factors less than 2^{35}, the 125th Mersenne number, $2^{125} - 1$, was factored on Tuesday, January 5, 1971, in 371 seconds run time as follows: $2^{125} - 1 =$
31 * 601 * 1801 * 26 90898 06001 * 4710 88316 88795 06001.
John Brillhart at the University of Arizona had already done this. M137 was factored on Friday, July 9, 1971 in about 50 hours of computer time: $2^{137} - 1 =$
32032 21559 64964 35569 * 54 39042 18360 02042 90159.

ITEM 29 (Schroeppel):
For a random number X, the probability of its largest prime factor being (1) greater than $\sqrt{X}$ is ln 2.
(2) less than $\sqrt[3]{X}$ is about 4.86%. This suggests that similar probabilities are independent of X; for instance, the probability that the largest prime factor of X is less than $\sqrt[29]{X}$ may be a fraction independent of the size of X.
RELEVANT DATA:
([ ] denote the expected value of adjacent entries.)

RANGE	COUNT	CUMULATIVE SUM OF COUNT	
10^{12} TO 10^{6}	7198 [6944]	10018	
10^{6} TO 10^{4}	2466	2820	
10^{4} TO 10^{3}	354	402 [487]	2.4
10^{3} TO 252	40	48	;252 = 10
252 TO 100	7	8	1.7
100 TO 52	1	1	;52 = 10
51 TO 1	0	0	

where:
"COUNT" is the number of numbers between $10^{12} + 1$ and $10^{12} + 10018$ whose largest prime factor is in "RANGE".
The number of primes in $10^{12} + 1$ to $10^{12} + 10018$ is 335; the prime number theorem predicts 363 in this range. This is relevant to Knuth's discussion of Legendre's factoring method, vol. 2, p. 351-354.

ITEM 30 (Schroeppel):
Twin primes:
166,666,666,667 = $(10^{12} + 2)/6$
166,666,666,669
The number 166,666,666,666,667 is prime, but
166,666,666,666,669 is not.
The primes which bracket 10^{12} are $10^{12} + 39$ and $10^{12} - 11$.
The primes which bracket 10^{15} are $10^{15} + 37$ and $10^{15} - 11$.
The number 23,333,333,333 is prime.
Various primes, using $T = 10^{12}$, are:
40T + 1, 62.5T + 1, 200T - 3, 500T - 1, 500T - 7.

ITEM 31 (Schroeppel):
Ramanujan's problem of solutions to $2^N - 7 = X^2$ was searched to about $N = 10^{40}$; only his solutions ($N = 3, 4, 5, 7, 15$) were found. It has recently been proven that these are the only ones. Another Ramanujan problem: Find all solutions of $n! + 1 = x^2$.

ITEM 32 (Schroeppel):
Take a random real number and raise it to large powers; we expect the fraction part to be uniformly distributed. Some exceptions:
1 -- $\Phi = (1 + \sqrt{5})/2$
2 -- all $-1 < X < 1$
3 -- $\sqrt{2}$ (half are integers, other half are probably uniformly distributed)
4 -- $1 + \sqrt{2}$ -- Proof:

$$(1 + \sqrt{2})^N + (1 - \sqrt{2})^N = \text{integer (by induction)};$$

the $(1 - \sqrt{2})^N$ goes to zero.
5 -- $2 + \sqrt{2}$ -- similar to $1 + \sqrt{2}$
6 -- any algebraic number whose conjugates are all inside the unit circle
Now, $3 + \sqrt{2}$ is suspicious; it looks non-uniform, and seems to have a cluster point at zero. PROBLEM: Is it non-uniform?

ITEM 33 (Schroeppel):
Numbers whose right digit can be repeatedly removed and they are still prime: CONJECTURE: There are a finite number of them in any radix. In decimal there are 51, the longest being 1,979,339,333 and 1,979,339,339.

ITEM 34 (Schroeppel):
PROBLEM: Can every positive integer be expressed in terms of 3 and the operations factorial and integer square root? E.g., $5 = \sqrt{\sqrt{3!!}}$.

ITEM 35 (Schroeppel):
Take as many numbers as possible from 1 to N such that no 3 are in arithmetic progression. CONJECTURE: As $N \to \infty$, the density of such sets approaches zero, probably like $N^{(\ln 2)/(\ln 3)}$.
XX.XX is a known solution for N = 5
XX.XX....XX.XX is a known solution for N = 14
Conjecture that XX.XX just keeps getting copied. If the $N^{(\ln 2)/(\ln 3)}$ can be proved, it follows that there are infinitely many primes P1, P2, P3 in arithmetic progression, since primes are much more common than $N^{(\ln 2)/(\ln 3)}$.

ITEM 36 (Schroeppel):
PROBLEM: How many squares have no zeros in their decimal expression? Ternary?

ITEM 37 (Gosper):
The number of n digit strings base B in which all B digits occur at least once is just the Bth forward difference at 0 of the nth powers of 0, 1, ... E.g., for n = 4:

```
  0     1     16    81   256   625
     1     15    65   175   369
        14    50   110   194
           36    60    84
              24    24
                 0
```

so there are 14 (= 2^4-2) such 4-bit strings, 36 such 4-digit ternary strings, 24 (= 4!) such quaternary, and 0 for all higher bases. 27 (= 10e?) random decimal digits are required before it is more likely than not that every digit has occurred; with 50 digits the likelihood is 95%.

ITEM 38 (Fredkin):
By the binomial theorem, the bth forward difference at 0 of the 0, 1, 2, ... powers of n is $(n-1)^b$. E.g., for n = 4:

```
  1    4    16   64   256
     3    12   48   192
        9    36   144
           27   108
              81
```

In fact, any straight line with rational slope through such an array will always go through a geometric sequence with common ratio of the form $n^a(n-1)^b$. In the above, east by southeast knight's moves give the powers of 12: 1, 12, 144, ...

ITEM 39 (Schutzenberger):
PROBLEM: Using N digits, construct a string of digits which at no time has any segment appearing consecutively twice.
N = 2 → finite maximum string
N = 10 → known infinite
Determine maximum string length for N = 3.
SUB-PROBLEM: How many sequences exist of any particular length?

ITEM 40 (Gosper):
The variance of a pseudo-Gaussian distributed random variable made by adding T independent, uniformly distributed random integer variables which range from 0 to N-1, inclusive, is $T((N^2 - 1)/12)$.

ITEM 41 (Salamin):
There are exactly 23000 primes less than 2^{18}.

ITEM 42 (Gosper):
To show that

$$\sum_{L=0}^{N} (\text{BINOMIAL } N+L\ L)*(X^{N+1}(1-X)^{L} + (1-X)^{N+1}X^{L}) = 1$$

set N to 20 and observe that it is the probability that one or the other player wins at pingpong. (X = probability of first player gaining one point, L = loser's score, deuce rule irrelevant.) If this seems silly, try more conventional methods.
PROBLEM: If somehow you determine A should spot B 6 points for their probabilities of winning to be equal, and B should spot C 9 points, how much should A give C?

ITEM 43 (Schroeppel):
Let (A,B,C...) be the multinomial coefficient
(A+B+C...)!/A!B!C!...
This is equal modulo the prime p to
(A0,B0,C0...)(A1,B1,C1...)(A2,B2,C2...)...
where AJ is the Jth from the right digit of A base p.
Thus (BINOMIAL A+B A) mod 2 is 0 iff (AND A B) is not.
The exponent of the largest power of p which divides (A,B,C...) is equal to the sum of all the carries when the base p expressions for A, B, C, ... are added up.

ITEM 44 (Gosper):
Recurrences for multinomial coefficients:
(A,B,C,...) = (A+B,C,...)(A,B) = (A+B+C,...)(A,B,C) = ...

PROBLEM 45 (Gosper):
Take a unit step at some heading (angle).
Double the angle, step again. Redouble, step, etc.
For what initial heading angles is your locus bounded?

PARTIAL ANSWER (Schroeppel, Gosper): When the initial angle is a rational multiple of π, it seems that your locus is bounded (in fact, eventually periodic) iff the denominator contains as a factor the square of an odd prime other than 1093 and 3511, which must occur at least cubed. (This is related to the fact that 1093 and 3511 are the only known primes satisfying $2^{P} = 2 \bmod P^{2}$). But a denominator of 171 = 9 * 19 never loops, probably because 9 divides $\phi(19)$. Similarly for 9009 and 2525. Can someone construct an irrational multiple of π with a bounded locus? Do such angles form a set of measure zero in the reals, even though the "measure" in the rationals is about .155? About .155 = the fraction of rationals with denominators containing odd primes squared = 1 - Π over odd primes of $1 - 1/P(P+1)$. This product = .84533064 ± a smidgen, and is not, alas, $\sqrt{\pi/2}$ ARCERF(1/4) = .84534756. This errs by 16 times the correction factor one expects for 1093 and 3511, and is not even salvaged by the hypothesis that all primes > a million satisfy the congruence. It might, however, be salvaged by quantities like 171.

ITEM 46 (Schroeppel):
The most probable suit distribution in bridge hands is 4-4-3-2, as compared to 4-3-3-3, which is the most evenly distributed. This is because the world likes to have unequal numbers: a thermodynamic effect saying things will not be in the state of lowest energy, but in the state of lowest disordered energy.

ITEM 47 (Beeler):
The Fibonacci series modulo P has been studied. This series has a cycle length L and within this cycle has sub-cycles which are bounded by zero members.
The length of powers of primes seems to be

$$L = (\text{length of prime}) * \text{prime}^{\text{power-1}}$$

The length of products of powers of primes seems to be
L = least common multiple of lengths of powers of primes which are factors.
There can be only 1, 2 or 4 sub-cycles in the cycle of a prime.
Primes with 1 sub-cycle seem to have lengths
L = (prime - 1)/N, N covering all integers.
Primes with 2 sub-cycles seem to have lengths

$$L = (\text{prime} - (-1)^{M})/M,$$

M covering all integers except of form 10 K + 5.
Primes with 4 sub-cycles seem to always be of form 4 K + 1, and seem to have lengths
L = 2 (prime + 1)/R or (prime - 1)/S,
R covering all integers of form 10 K + 1, 3, 7 or 9;
S covering all integers.
At Schroeppel's suggestion, the primes have been separated mod 40, which usually determines their number of sub-cycles:

PRIME mod 40	SUB-CYCLES
1, 9	usually 2, occasionally 1 or 4 (about equally)
3, 7, 23, 27	2
11, 19, 31, 39	1
13, 17, 33, 37	4
21, 29	1 or 4 (about equally)
2 (only 2)	1
5 (only 5)	4

Attention was directed to primes which are 1 or 9 mod 40 but have 1 or 4 subcycles. $25 X^2 + 16 Y^2$ seems to express those which are 9 mod 40; $(10 X \pm 1)^2 + 400 Y^2$ seems to express those which are 1 mod 40. PROBLEM: Can some of the "seems" above be proved? Also, can a general test be made which will predict exact length for any number?

ITEM 48 (Gosper, Schroeppel):
A point of the 2 dimensional lattice is called visible iff its coordinates are relatively prime. The invisible 2 by 2 square with smallest X has its near corner on (14,20).
(I.e., (14,20), (15,20), (14,21), and (15,21) are all invisible.)
The corresponding 3 by 3 is at (104,6200). By the Chinese remainder theorem, there exist invisible sets of every finite shape. Excellent reference: Amer. Math. Monthly, May '71, p487.

ITEM 49:
There is a unique "magic hexagon" of side 3:

```
     3  17  18
  19    7   1  11
16    2   5   6   9
  12    4   8  14
    10  13  15
```

First discovered by Clifford W. Adams, who worked on the problem from 1910. In 1957, he found a solution. (See Aug. 1963 Sci. Am., Math. Games.) Other length sides are impossible.

ITEM 50 (Schroeppel):
There is no magic cube of order 4.
Proof: Let K (= 130) be the sum of a row.
Lemma 1: In a magic square of order four, the sum of the corners is K.
Proof: Add together each edge of the square and the two diagonals. This covers the square entirely, and each corner twice again. This adds to 6K, so twice the corner sum is 2K.
Lemma 2: In a magic cube of order 4, the sum of any two corners connected by an edge of the cube is K/2.
Proof: Call the corners a and b. Let c, d and e, f be the corners of any two edges of the cube parallel to ab. Then abcd, abef, and cdef are all the corners of magic squares. So a+b+c+d + a+b+e+f + c+d+e+f = 3K; a+b+c+d+e+f = 3K/2; a+b = K/2.
Proof of magic cube impossibility: Consider a corner x. There are three corners connected by an edge to x. Each must have value K/2 - x. QED

ITEM 51 (Schroeppel):
By similar reasoning, the center of an order 5 magic cube must be 63 = K/5. COROLLARY: There is no magic tesseract of order 5.

ITEM 52 (Salamin):
The probability that two random integers are relatively prime is $6/\pi^2$. PSEUDO-PROOF: Let X be the probability. Let S be the set of points in the integer lattice whose coordinates are relatively prime, so that S occupies a fraction X of the lattice points. Let S(D) be the set of points whose coordinates have a GCD of D. S(D) is S expanded by a factor of D from the origin. So S(D) occupies a fraction X/D^2 of the lattice, or the probability that two random integers have a GCD of D is X/D^2. If D unequals D', then S(D) intersect S(D') is empty, and union of all S(D) is the entire lattice. Therefore $X*(1/1^2+1/2^2+1/3^2+...) = 1$, so $X = 6/\pi^2$. This argument is not rigorous, but can be made so.

ITEM 53 (Salamin):
The probability that N numbers will lack a Pth power common divisor is $1/\zeta(NP)$.

ITEM 54 (Salamin & Gosper):
The probability that a random rational number has an even denominator is 1/3.

ITEM 55 (Schroeppel): GAUSSIAN INTEGERS
See following illustrations; also PI section.

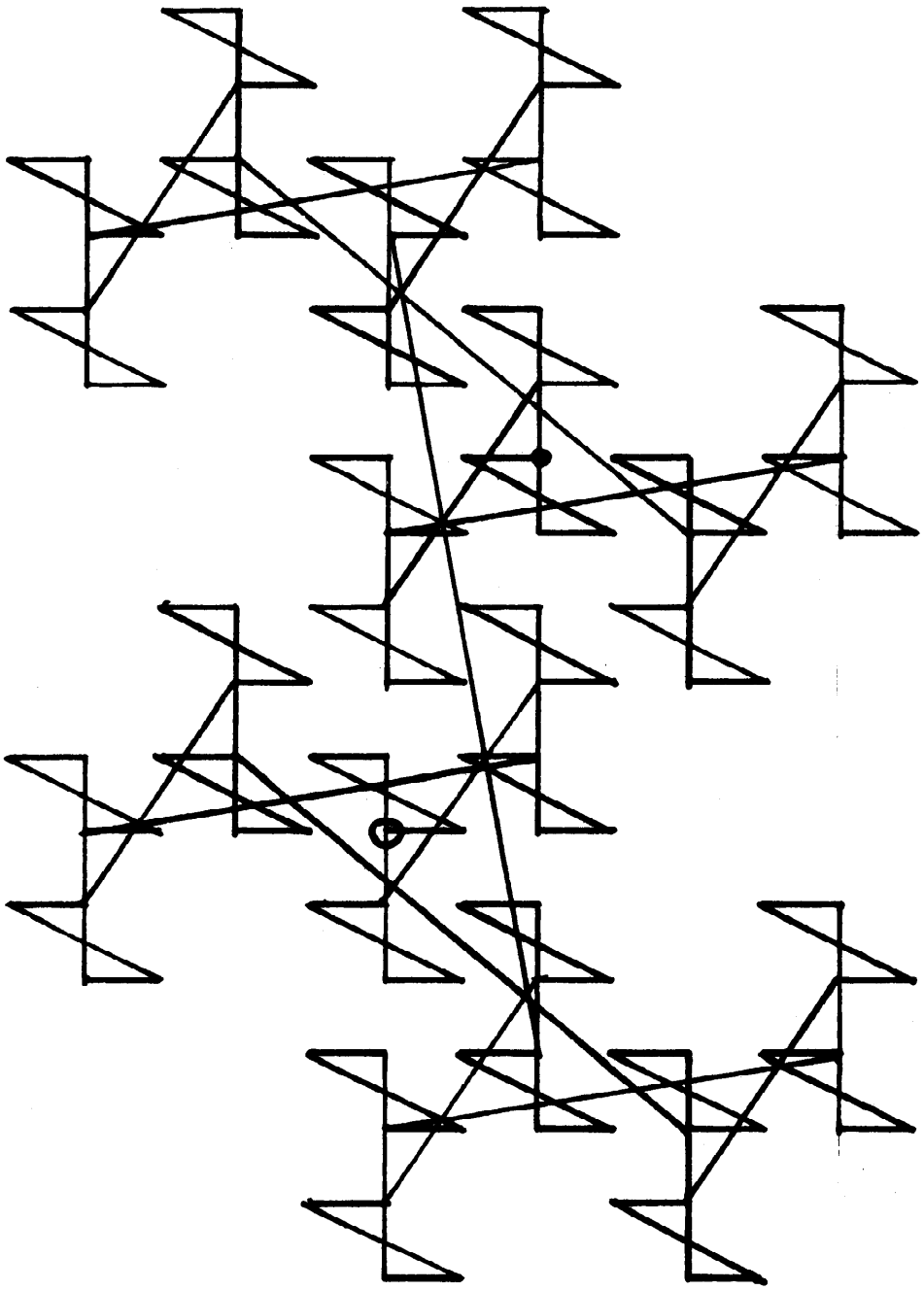

Figure 1(a). This diagram is to substantiate the claim that every Gaussian integer has a unique bit combination. Running through bit combinations 0, 1, 10, 11, ..., the diagram is a map of values, radix i-1. The origin is circled; the dot is at the 127th combination (1111111 = 2 + 5i), which is merely the last point drawn.

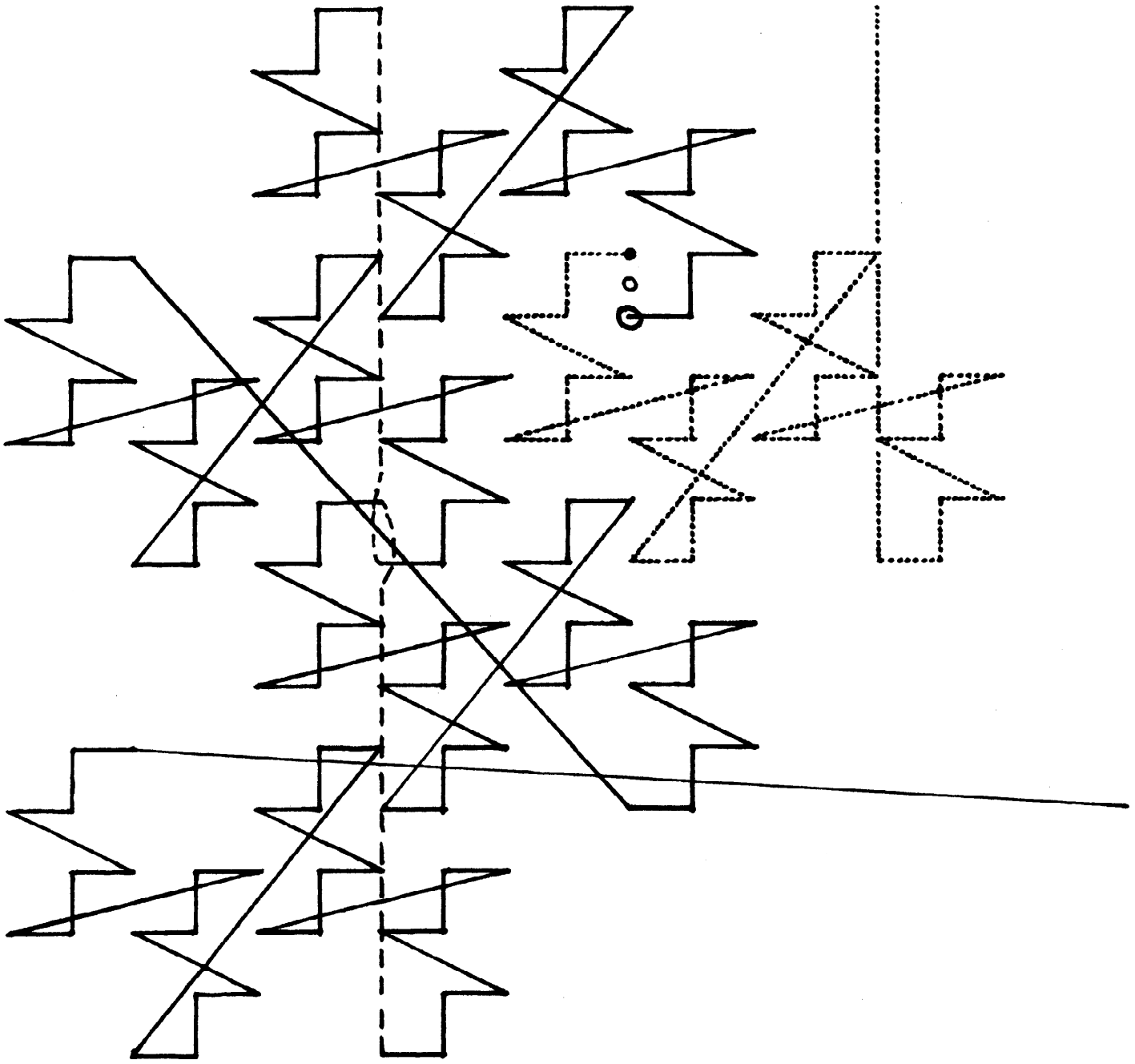

Figure 1(b). As 1(a), but radix i+1. Large circle is origin. Dashes indicate continuity of curve at confusing places. Dotted curve is with an infinity of ones to the left (big dot = ...1111 = i). The solid and dotted curves are symmetrical about the point marked with a small circle.

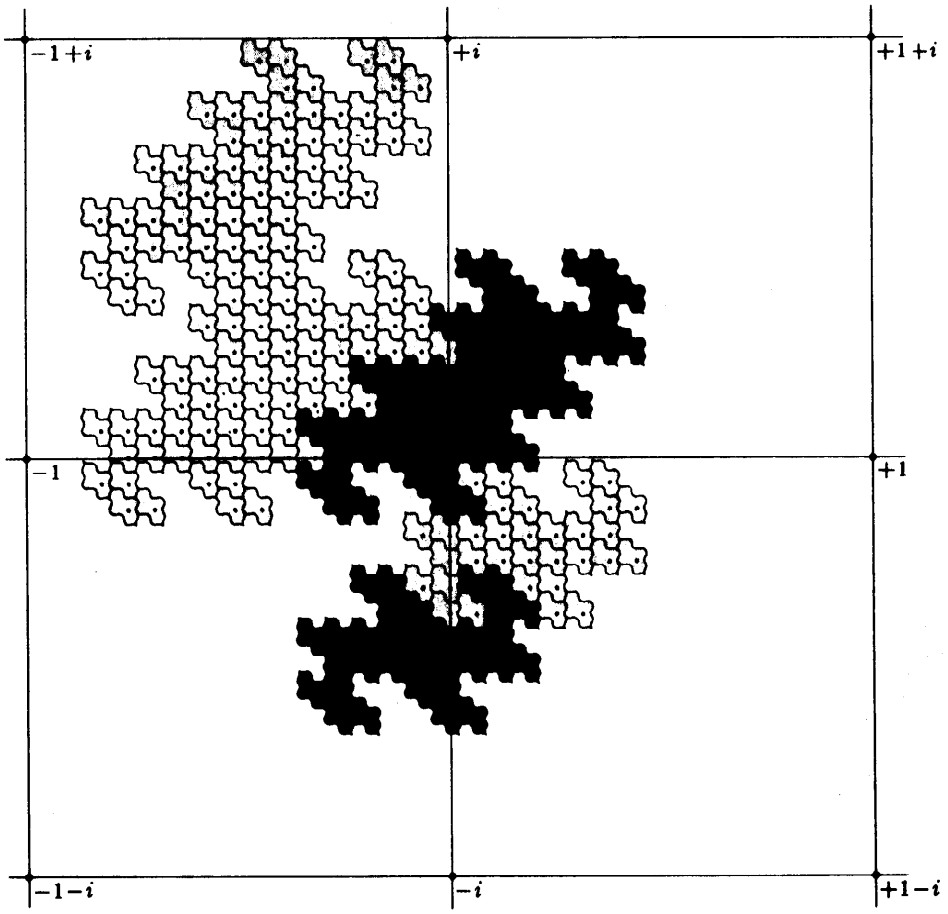

Figure 2. Similar to 1(a), but showing fraction parts as well. Reprinted by special permission from Knuth, The Art of Computer Programming, Volume 2, Seminumerical Algorithms, 1969, Addison-Wesley, Reading, Mass.

ITEM 56 (Beeler):
The "length" of an N-digit decimal number is defined as the number of times one must iteratively form the product of its digits until one obtains a one-digit product (see Technology Review Puzzle Corner, December 1969 and April 1970). For various N, the following shows the maximum "length", as well as how many distinct numbers (permutation groups of N digits) there are:

N	MAX L	DISTINCT
2	4	54
3	5	219
4	6	714
5	7	2,001
6	7	5,004
7	8	11,439
8	9	24,309
9	9	48,619
10	10	92,377
11	10	167,959
12	10	293,929

Also, for N = 10, 11 and 12, a tendency for there to be many fewer numbers of "length" = 7 is noted. Other than this, the frequency of numbers of any given N, through N = 12, decreases with increasing "length". CONJECTURE (Schroeppel): No L > 10.

ITEM 57 (Beeler, Gosper):
There is at least one zero in the decimal expression of each power of 2 between 2^{86} = 77,371,252,455,336,267,181,195,264 and $2^{30739014}$, where the program was stopped. If digits of such powers were random, the probability that there is another zeroless power would be about $1/10^{4118^{16}}$. Assuming there aren't any then raises the question:
How many final nonzero digits can a power of two have?
ANSWER (Schroeppel): Arbitrarily many. If we look at the last n digits of consecutive powers of 2, we see:
a) None end in zero.
b) After the nth, they are all multiples of 2^n.
c) They get into a loop of length $4 * 5^{n-1}$.
(Because 2 is a primitive root of powers of 5.)
But there are only $4 * 5^{n-1}$ multiples of 2^n which don't end with zero and are < 10^n, so we will see them all. In particular, we will see the one composed entirely of 1's and 2's, which ends ...11112111211111212122112.

ITEM 58 (Fredkin):
$3^3 + 4^3 + 5^3 = 6^3$.

ITEM 59 (Schroeppel):
$91038\ 90995\ 89338\ 00226\ 07743\ 74008\ 17871\ 09376^2 =$
$82880\ 83126\ 51085\ 58711\ 66119\ 71699\ 91017\ 17324$
$91038\ 90995\ 89338\ 00226\ 07743\ 74008\ 17871\ 09376$

ITEM 60 (Beeler):
If S = the sum of all integers which exactly divide N, including 1 and N, then "perfect numbers" are S = 2 N; the first three numbers which are S = 3 N are:
$120 = 2^3 * 3 * 5 =$ 1111000 base 2
$672 = 2^5 * 3 * 7 =$ 1010100000 base 2
$523{,}776 = 2^9 * 3 * 11 * 31 =$ 1111111111000000000 base 2

ITEM 61 (Root):
Consider iteratively forming the sum of the factors (including 1 but not N) of a number N. This process may loop; "perfect numbers" are those whose loop is one member, N. For example, N = 28 = 1 + 2 + 4 + 7 + 14. An example of a two-member loop is:
sum of factors of 220 = 284
sum of factors of 284 = 220
Two-member loops are called "amicable pairs."
A program to search for loops of length > 2, all of whose members are < 6,600,000,000 found the known loops of length 5 (lowest member is 12496) and 28 (lowest member is 14316), but also 13 loops of 4 members (lowest member is given):

$1{,}264{,}460 = 2^2 * 5 * 17 * 3{,}719$
$2{,}115{,}324 = 2^2 * 3^2 * 67 * 877$
$2{,}784{,}580 = 2^2 * 5 * 29 * 4{,}801$
$4{,}938{,}136 = 2^3 * 7 * 109 * 809$
$7{,}169{,}104 = 2^4 * 17 * 26{,}357$
$18{,}048{,}976 = 2^4 * 11 * 102{,}551$
$18{,}656{,}380 = 2^2 * 5 * 932{,}819$
$46{,}722{,}700 = 2^2 * 5^2 * 47 * 9{,}941$
$81{,}128{,}632 = 2^3 * 13 * 19 * 41{,}057$
$174{,}277{,}820 = 2^2 * 5 * 29 * 487 * 617$
$209{,}524{,}210 = 2 * 5 * 7 * 19 * 263 * 599$
$330{,}003{,}580 = 2^2 * 5 * 16{,}500{,}179$
$498{,}215{,}416 = 2^3 * 19 * 47 * 69{,}739$

ITEM 62 (Speciner):
The first four perfect numbers are 6, 28, 496, 8128.
Two-member loops (amicable pairs) are:

220 ↔ 284
1184 ↔ 1210
2620 ↔ 2924
5020 ↔ 5564
6232 ↔ 6368
10744 ↔ 10856
12285 ↔ 14595
17296 ↔ 18416
63020 ↔ 76084
66928 ↔ 66992
67095 ↔ 71145
69615 ↔ 87633
79750 ↔ 88730
100485 ↔ 124155
122265 ↔ 139815
122368 ↔ 123152
141644 ↔ 153176
142310 ↔ 168730
171856 ↔ 176336
176272 ↔ 180848
185368 ↔ 203432
196724 ↔ 202444

(Exhaustive to smaller member $\leq$ 196724 and larger member < 2^{35}.)
A prime decade is where N+1, N+3, N+7 and N+9 are all prime.
The first occurrence of two prime decades with the theoretical minimum separation is N = 1006300 and N = 1006330. The 335th prime decade is N = 2342770. There are 172400 primes < 2342770.

ITEM 63 (Schroeppel, etc.):
The joys of 239 are as follows:
$\pi = 16 \arctan(1/5) - 4 \arctan(1/239)$,
which is related to the fact that $2 * 13^4 - 1 = 239^2$,
which is why 239/169 is an approximant (the 7th) of $\sqrt{2}$.
$\arctan(1/239) = \arctan(1/70) - \arctan(1/99)$
$= \arctan(1/408) + \arctan(1/577)$
239 needs 4 squares (the maximum) to express it.
239 needs 9 cubes (the maximum, shared only with 23) to express it.
239 needs 19 fourth powers (the maximum) to express it.
(Although 239 doesn't need the maximum number of fifth powers.)
1/239 = .00418410041841..., which is related to the fact that
1,111,111 = 239 * 4,649.
The 239th Mersenne number, $2^{239} - 1$, is known composite,
but no factors are known.
239 = 11101111 base 2.
239 = 22212 base 3.
239 = 3233 base 4.
There are 239 primes < 1500.
K239 is Mozart's only work for 2 orchestras.
Guess what memo this is.
And 239 is prime, of course.

AUTOMATA THEORY

ITEM 64 (Schroeppel):
A 2-counter machine, given N in one of the counters, cannot generate 2^N. Proven Saturday, Sept. 26, 1970. (Independently rediscovered by Frances Yao). But (Minsky, Liknaitzky), given N, 2^N, it can generate 2^{2^N}. (A 2-counter machine has a fixed, finite program containing only the instructions "ADD 1", "SUBTRACT 1", "JUMP IF NOT ZERO", which refer to either of two unlimited counters. Such machines are known universal, but (due to the above) they must have specially encoded inputs.)

ITEM 65 (Schroeppel):
What effort is required to compute $\pi(X)$, the number of primes < X? Shanks and Brillhart claim about $X^{.7}$.

ITEM 66 (Gosper):
See space-filling curve machine item in TOPOLOGY section.

ITEM 67 (Schroeppel):
Regarding "poker coins" game, whose rules are:
1 a player throws N coins;
  he then puts one or more aside and rethrows the rest
2 this throwing is repeated until he no longer has any to throw
3 highest score (dice) or maximum number of heads (coins) wins
For poker coins, the optimal strategy, with N coins thrown, is:
Z = number of zeros (tails)
        if Z = 0, quit
        if Z = 1, throw the zero
        if 1 < Z < N, save one one, throw the other N-1 coins
        if Z = N, save a zero, throw the other N-1 coins
The optimal strategy for poker dice is hairier.

ITEM 68 (Schroeppel):
PROBLEM: Solve Blackout, a game as follows: Two players alternate placing X's on a rectangular grid. No two X's may appear adjacent along a side or across the diagonal at a corner. The last X wins. Some theory: The "indicator" for a position is: make all possible moves from the given position. Evaluate the indicator of each of these successor positions. The indicator of the first position is the smallest number which is not the indicator of a successor position. The indicator of the null position is 0. The second player wins iff the indicator is 0. Example of calculating an indicator for the 3 × 3 board: There are 3 distinct moves possible -- corner, side, center. Playing in the center leaves the null position, indicator 0. Playing on the side leaves a 1 × 3 line, indicator 2. Playing in the corner leaves a 3 × 3 L, indicator 3. The smallest number not appearing in our list is 1, so the indicator of a 3 × 3 square is 1. For two boards (not touching) played simultaneously, the indicator is the XOR of the indicators for the separate boards. For any position, the indicator is $\leq$ the maximum game length.
PROBLEM: Find some non-exponential way to compute the indicator of a given position. For lines, a period of 34 is entered after the line is about 80 long. For Ls: if one leg is held fixed, the indicator (as a function of the other leg) seems to become periodic with period 34. The time to enter the period becomes greater as the fixed leg increases.
On an odd × odd board, the 1st player wins.
On a 4 × N board, the 2nd player wins.
On a 6 × 6 board, the 1st player wins by playing at the center of one quarter.
This indicator analysis is similar for many other take-away games, such as Nim.

ITEM 69:
Berlekamp of Bell Labs has done the 9 squares (16 dots) Dots game; the 2nd player wins.

ITEM 70:
A neat chess problem, swiped from "Chess for Fun and Chess for Blood", by Edward Lasker: white: pawns at QN3 and KN7, knight at QN4, bishop at KB7, king at QB2; black: pawn at QN3, king at QR6. White mates in three moves.

ITEM 71 (Beeler):
There is only one distinct solution to the commercial "Instant Insanity" colored-faces cubes puzzle, which is how it comes packed. (Independently discovered by Dave Plumer.) Mike Paterson has discovered a clever way to solve the puzzle.

ITEM 72 (Beeler):
A window-dice game is as follows:
1 The player starts with each of nine windows open, showing the digits 1 - 9.
2 Roll two dice.
3 Cover up any digits whose sum is the sum on the dice.
4 Iterate throwing and closing windows until the equality of sums is impossible.
5 Your score is the total of closed windows (highest wins).
An optimum strategy has been tabulated. Usually it is best to take the largest digits possible, but not always; it also depends critically on the remaining numbers.

ITEM 73 (Beeler):
Sim is a game where two players alternately draw lines connecting six dots. The first person to form a triangle in his color loses. The second player can always win, and whether his first move connects with the first player's first move doesn't matter; from there on, however, the strategy branches to a relatively gruesome degree.
PROBLEM: 6 dots is minimum to ensure no stalemate with 2 players; how many dots are required with 3 players?

ITEM 74 (Beeler):
The 4 × 4 game of Nim, also known as Tactix, is a win for the second player, who on his first move can reply center-symmetrically unless the first player's first move was B1 and B2 (analyzed on RLE PDP-1).

A 1963 PDP-1 computer program gave us some interesting data on the traditional game of peg solitaire (33 holes in a plus shape).

```
      A B C
      D E F
G H I J K L M
N P Q . S T U
V W X Y Z 1 2
      3 4 5
      6 7 8
```

From the starting position, complement the board. This is the ending position. Now from the starting position, make one move, then complement the board. This is a position one move from a win. By induction, you can win from the complement of any position you can reach. Thus every successful game has a dual game whose positions are the complements of the original ones. This debunks the heuristic of emptying the arms of the plus first and then cleaning up the middle, because there are just as many dual games which empty out the middle first and then the arms! The program found one counterintuitive win which at one point left the center nine empty but had ten in the arms.

```
      . B .
      D E .
. . . . . . .
. P . . . T U
V W . . . . .
      . 4 .
      . 7 .
```

By dualizing and permuting a solution from the folklore, we found a similar winning position with 20. (T Q 4 R 1 L J H W Y M J) leaves:

```
      A B C
      D E F
G H . . . L .
N . . . . . U
V W . . . 1 2
      3 . 5
      6 7 8
```

then (8 V A C/B 2 6 G M F/K S 8 1 Y V 3 Q A H E).

Another useful observation is that the pegs and their original hole positions fall into four equivalence classes in which they stay throughout the game. Thus the four pegs which can reach the center on the first move are the only ones that ever can. Similarly, the peg jumped over on the last move must be in one of the two classes of eight members which get reduced on the first move. The program's main heuristic was to reduce the larger classes first.

```
      a b a
      c d c
  a b a b a b a
  c d c . c d c
  a b a b a b a
      c d c
      a b a
```

With its heuristics disabled, the program simply scanned lexicographically (left to right in the inner loop, then top to bottom) for a peg which could move. At one point, there is a peg which can move two ways; it chose west. Twelve moves from the end it stopped and went into an exhaustive tree search, in which it found two basically different wins. (Try it yourself.)

```
      . . .
      . . .
  . . . . K . .
  . . Q . . . .
  . . X Y Z 1 2
      3 4 5
      6 7 8
```

ITEM 76 (Beeler):
Triangular Hi-Q (or peg solitaire) is 15 pegs in a triangle.
One peg is removed, and thereafter pegs jump others,
which are removed. With pegs numbered 1 at the top,
2 and 3 in the next row, etc.,

REMOVE	CAN END WITH ONLY THE PEG
1	1, 7 = 10, 13
2	2, 6, 11, 14
4	3 = 12, 4, 9, 15
5	13

Removing only one, no way exists to get to either 1 + 11 + 15 (tips) or 4 + 6 + 13 (centers of sides). Starting with peg 1 removed, 3,016 positions are attainable (not turning board); the sum of ways to get to each of these is 10,306. An example is: remove peg 1, then jump as follows: 6, 13, 10, 1, 2, 11, 14/13, 6, 12/13, 15, 7/4, 13, 4; leaving peg 1.

****
PROPOSED COMPUTER PROGRAMS, IN ORDER OF
INCREASING RUNNING TIME (Schroeppel)
****

PROBLEM 77: Count the polyominos up to, say, order 20.
From Applied Combinatorial Mathematics, pages 201 and 213:

ORDER	E. H.	NOT ENCLOSING HOLES
1	1	1
2	1	1
3	2	2
4	5	5
5	12	12
6	35	35
7	108	107
8	369	363
9	1285	1248
10	4655	4271
11	17073	
12	63600	
13	238591	
14	901971	
15	3426576	
16	13079255	
17	50107911	
18	192622052	

The order 13 through 18 data is from Computers in Number Theory, 1971, Atkin & Birch, ed., Academic Press, which has not been independently checked. It also gives bounds 3.72 < limit as N goes to infinity of Nth root of number of polyominos of order N (including those enclosing holes) < 4.5. Also an asymptotic formula for the number of polyominos:

$$4.06 * (N)^{-.98\pm.02} * \text{constant}.$$

Polyominos may be constructed in 3-space (Soma-like pieces) or higher dimensions; a curious thought is into how many dimensions does the average, say, 20-omino extend?

PROBLEM 78: Solve "minichess", chess played on a 5 × 5 board where each side has lost the king's rook, knight, bishop, and 3 pawns, and the opponents are shoved closer together (1 empty row intervening, no double pawn moves).

PROBLEM 79: Solve the tiger puzzle, a sliding block puzzle mentioned in Scientific American February 1964, pages 122 - 130.

PROBLEM 80: Find smallest squared square (a square composed entirely of smaller, unequal squares). Smallest known has 24 small squares (Martin Gardner's Scientific American Book, vol. 2, page 206). See also the following two illustrations. Recently, someone constructed a squared rectangle with sides in the ratio 1:2. It contains 1353 squares.

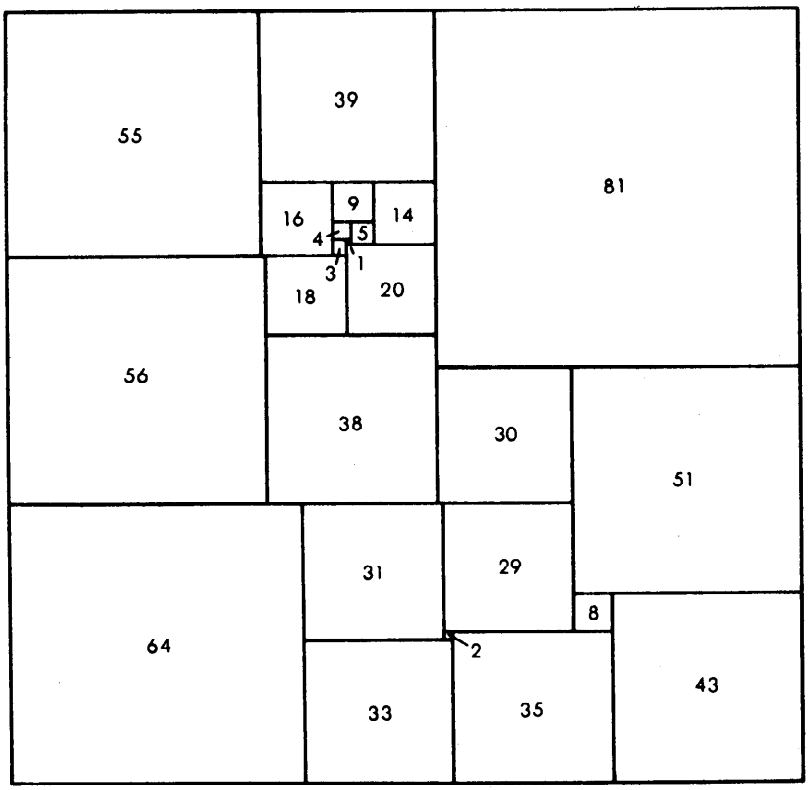

Figure 3(a). The smallest known (in 1961, and yet today as far as we know) squared square. Reprinted by special permission from Martin Gardner, The Second Scientific American Book of Mathematical Puzzles and Diversions, 1961, Simon and Schuster, New York, New York.

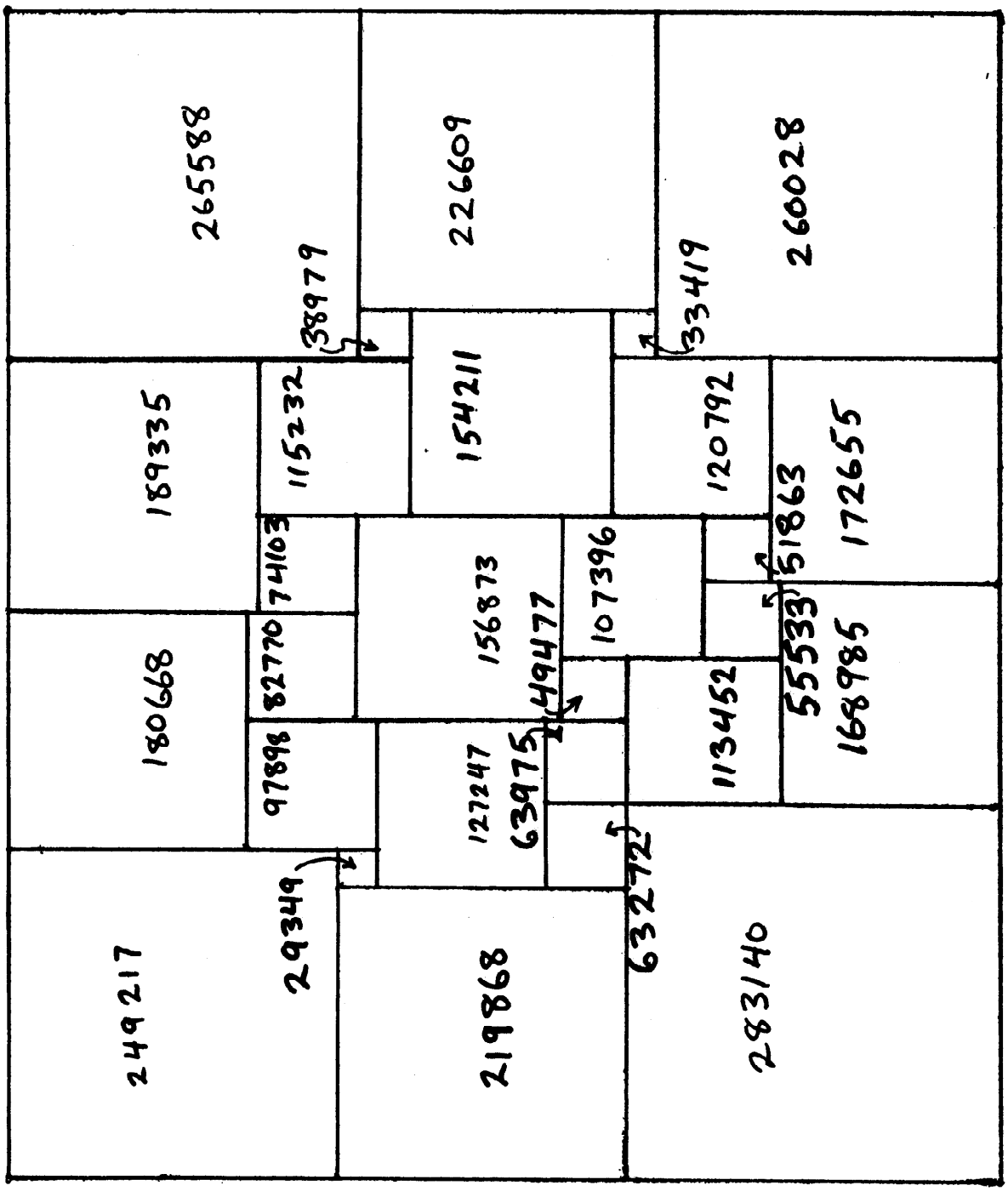

Figure 3(b). A squared rectangle found by Schroeppel using "String Handling Interpretive Translator," a string processing language written by Samson. Sides are 884808 = $2^3 * 3^2 * 12289$ and 752225 = $5^2 * 30089$; semiperimeter is 1637033 = 419 * 3907. This has 28 squares, which is more than most published squared rectangles.

PROBLEM 81: Count the magic squares of order 5. There are about 320 million, not counting rotations and reflections.

PROBLEM 82: List (that is, count) the semigroups of 7 elements; also, the groups of 256 elements (estimated: 11000).

PROBLEM 83 (Gosper): Compute the integer-valued step function F(R), $0<R<1$, the number of circles of radius R which fit into a unit circle. F skips the value 6, and probably 18. How many and how big are the gaps in the range of F? What happens in n dimensions (including n = infinity)?

PROBLEM 84: Solve pentominos on an 8 × 8 checkerboard game(s). Rules:

1 The checkerboard is for aid in orienting only; black and white are the same.
2 The two players may each have a full complement of 12 pentominos, or they may "choose up" their half of one set.
3 Players alternate placing pentominos on the board. Pentominos must not overlap.
4 The last player to place a pentomino wins.

PROBLEM 85: With regard to dissection theorems, the following are known: a triangle into a square, 4 pieces (proven minimal); a pentagon into a square, 6 pieces (best known) etc. ("Geometric Dissections" by Harry Lindgreen, Scientific American November 1961). A program can probably check the known dissections for minimality! See following illustration, for example.

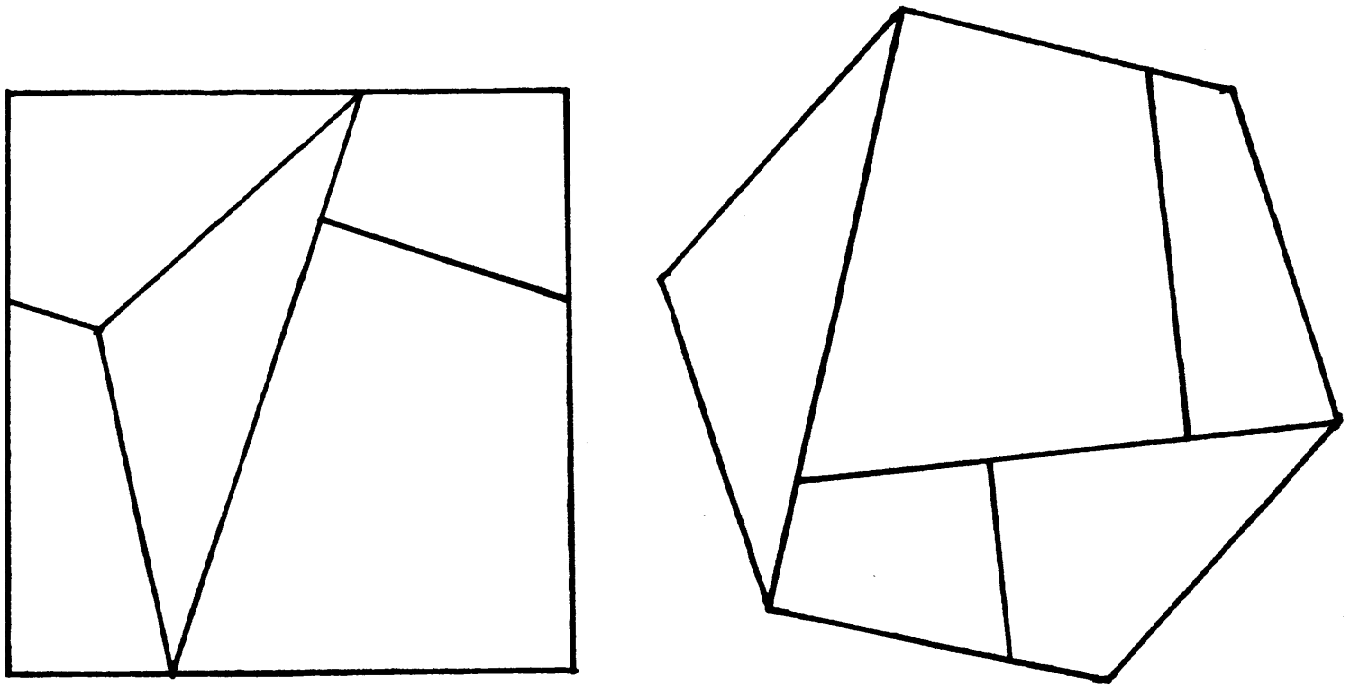

Figure 4. A surprising square ↔ hexagon dissection, adapted from page 164 of the November, 1961 issue of Scientific American, which see for further diagrams and discussion.

PROBLEM 86: Find the number of domino coverings for various objects. For example, an asymptotic formula is known for rectangles; also, on a square board, if side mod 4 = 0, coverings appears to be a square; on a square board, if side mod 4 = 2, coverings appears to be twice a square. See Applied Comb. Math., chap. 4.4-4.6, p. 105 - 121. Article by E. W. Montroll.

PROBLEM 87: Analyze giveaway chess, which is as follows:
1 captures must be made,
  although you can choose which capture to make
2 pawns must be promoted to queens
3 king is just another piece
4 player to give away all pieces first wins

PROBLEM 88: Analyze "escalation chess", where white gets 1 move, black 2, white 3, etc. If a player is in check, he must get out of check on his first move. He may not move into check. Taking your opponent's king is verboten, but you can pile up triple checks, etc. A player is checkmated if he can't get his king out of check on his first move.

PROBLEM 89: In the game "4 pawns", black has 4 pawns, a king, and two moves to white's one. Prove the pawns win. The object in this game is to capture the king. Black is allowed to move through check.

PROBLEM 90: Solve Scarne's game, "Teeko," which is played on a 5×5 board by two players who alternate placing, one at a time, their 4 counters each, after which the counters are moved around (including diagonally). 4 in a row or square wins.

PROBLEM 91: Solve "five-in-a-row" on an infinite board.

PROBLEM 92: Solve Tic-Tac-Toe on a $4 \times 4 \times 4$ board.
The consensus is a win for the first player, but it's unproven.
The first player wins on $4 \times 4 \times 4 \times 4$.

PROBLEM 93: Solve checkers. There are about 10^{12} positions.
(Computing time currently estimated (Schroeppel) at 1 year).

Programs below this line are considered unfeasible.

PROBLEM 94: Solve Hex on large boards (11 to 23 on a side); through order 7 have been analyzed by hand. There is a proof that in games where having an extra move can never (repeat: never) hurt you, the worst the first player can be forced to do is draw. Thus, with Hex, in which there is no draw, the first player can always win.

PROBLEM 95: Solve chess. There are about 10^{40} possible positions; in most of them, one side is hopelessly lost.

PROBLEM 96: Solve Go. About 10^{170} positions.

CONTINUED FRACTIONS

ITEM 97 (Schroeppel):
Simple proofs that certain continued fractions are $\sqrt{2}$, $\sqrt{3}$, etc.
Proof for $\sqrt{2}$:

$X = [1, 2, 2, 2, \ldots]$
$(X-1)(X+1) = [0, 2, 2, 2, \ldots] * [2, 2, 2, 2, \ldots] = 1$
$X^2 - 1 = 1$
$X = \sqrt{2}$

Proof for $\sqrt{3}$:

$Y = [1, 1, 2, 1, 2, \ldots]$
$(Y + 1)(Y - 1) = [2, 1, 2, 1, 2, \ldots] * [0, 1, 2, 1, 2, \ldots]$
$= 2 * [1, 2, 1, 2, 1, \ldots] * [0, 1, 2, 1, 2, \ldots] = 2$
$Y^2 - 1 = 2$
$Y = \sqrt{3}$

Similar proofs exist for $\sqrt{5}$ and $\sqrt{6}$; but $\sqrt{7}$ is hairy.

ITEM 98 (Schroeppel):
The continued fraction expansion of the positive minimum of the factorial function (about 0.46) is
[0, 2, 6, 63, 135, 1, 1, 1, 1, 4, 1, 43, ...].

ITEM 99 (Schroeppel):
The value of a continued fraction with partial quotients increasing in arithmetic progression is

$$[A+D, A+2D, A+3D, \ldots] = \frac{I_{A/D}(2/D)}{I_{1+(A/D)}(2/D)}$$

where the I's are Bessel functions.

A special case is $[1, 2, 3, 4, \ldots] = \frac{I_0(2)}{I_1(2)}$.

ITEM 100 (Perron):

$$\prod_{k=1}^{n} (1 + 1/Ak) =$$

$$1 + \frac{1}{A1 -} \quad \frac{(A1 + 1)A1}{A1+A2+1 -} \quad \frac{(A2 + 1)A2}{A2+A3+1 -} \quad \ldots \quad \frac{(A(n-1) + 1)A(n-1)}{A(n-1)+An+1}.$$

On the theory that continued fractions are underused, probably because of their unfamiliarity, I offer the following propaganda session on the relative merits of continued fractions versus other numerical representations. For a good cram course in continued fractions, see Knuth, volume 2, page 316. (In what follows, "regular" means that all numerators are 1, and any radix can be read in place of decimal.)

0) π is 3. But not really 3, more like 3 + 1/7. But not really 7, more like 7 + 1/15. But not really 15, ... So the regular continued fraction for π is written 3 7 15 1 292 1 1 ... .

1) The continued fractions for rational numbers always come out even, and rather quickly. Thus, the number of inches per meter is exactly 100/2.54 or 39 2 1 2 2 1 4. The corresponding decimal fraction 39.3700787... has period 42, making it almost impossible to tell if the number is rational. (But if our data are ALL rational, the ordered pair 5000/127 is even more concise.)

2) Quadratic surds, which are of course inexpressible as rationals, are generally unrecognizable in decimal. Their continued fractions, on the other hand, are periodic. Nth roots of e^2, ratios of Bessel functions, and ratios of linear functions of these all have regular continued fractions formed by interleaving one or more arithmetic sequences. These special properties will show up regardless of number base. You might recognize 5.436563... as 2e, but even Schroeppel might not notice that 6.1102966796... was $(4\,e^{2/3} - 2)/(e^{2/3} - 1)$ until he wrote it as 6 9 15 21 27 33 ... .

The familiar transcendental functions of rational arguments also have simple continued fractions, but these are generally not regular and cannot be reconstructed from numerical values by a simple algorithm, since nonregular representations aren't unique. The point is, however, that numbers like e, π, $\sqrt{2}$, sin .5, $\sqrt{7}$ arctan $\sqrt{7}$, etc. can be expressed to unlimited precision by simple programs which produce the terms on demand.

3) If we define a rational approximation to be "best" if it comes closer than any other rational with such a small denominator, then continued fractions give the complete set of best rational approximations to the value which they represent. That is, if you truncate a (regular) continued fraction at any point, then the resulting rational number is a best approximation. Furthermore, this remains true if the last term of this approximation is replaced by any smaller positive integer other than 1. All best approximations can be generated in this manner, in order of increasing denominators (or numerators). For example, the approximants to π = 3 7 15 1 292 ... are:

```
 3:    1/1, 2/1, 3/1
 7:    (4/1), 7/2, 10/3, 13/4, 16/5, 19/6, 22/7
15:    (25/8), 47/15, 69/22, 91/29, 113/36, ... 311/99, 333/106
 1:    355/113
...      ...
```

Note that they are all automatically in lowest terms. The size of a denominator is greater than the product of the terms involved and less than the product of the numbers 1 greater than the terms. The approximations are low if the number of terms is odd, high if it's even. (Note that if a 1 ends a continued fraction, it should be added in to the previous term. Thus, to "round off" a continued fraction after a certain term, add in the next term iff it is ±1. In the above, 4/1 and 25/8 correspond to termination with a 1 and are not "best"; 355/113 is "best" because the corresponding term really should be 1.) The error is smaller than 1 over the product of the denominator squared and the first neglected term, so that the total number of digits (numerator and denominator) is usually slightly smaller than with equally accurate decimal fractions. 355/113 is good to 7.5 places instead of 5.5, due to the unusually large term (292) which follows.

4) Numerical comparison of continued fractions is slightly harder than in decimal, but much easier than with rationals -- just invert the decision as to which is larger whenever the first discrepant terms are even-numbered. Contrast this with the problem of comparing the rationals 113/36 and 355/113.

5) Regular continued fractions are in 1 to 1 correspondence with the real numbers, unlike decimal (.5 = .49999...) or rationals (2/3 = 6/9, $\sqrt{6}$ = ?). Even infinity has a continued fraction, namely, the empty one! (Minus and plus infinity are the same in continued fraction notation.)

6) Each representation favors certain operations. Decimal favors multiplication by powers of 10. Rationals favor reciprocation, as do continued fractions. To reciprocate a regular continued fraction, add (or if possible, delete) an initial 0 term. To negate, negate all the terms, optionally observing that -a, -b, -c, -d ... = -a-1, 1, b-1, c, d ... .

7) The strongest argument for positional (e.g., decimal or floating) representation for non-integers is that arithmetic is easy. Rational number arithmetic often loses because numerators and denominators grow so large as to require icky multiprecision. Algorithms for arithmetic on continued fractions seem generally unknown. The next items describe how to arithmetically combine continued fractions to produce new ones, one term at a time.

Unfortunately, the effort required to perform these operations manually is several times that for decimal, but the rewards for machine implementation are considerable (which can also be said of floating point). Specifically, these rewards will be seen to be: unlimited significance arithmetic without multiprecision multiplication or division, built in error analysis, immorally easy computation of algebraic functions, no unnecessary computations, no discarding of information (as with roundoff and truncation), reversibility of computations, and the terms of the answer start to come out right away and continue to do so until shut off.

ITEM 101B (Gosper):

Continued Fraction Arithmetic

Continued fractions let us perform numerical calculations a little at a time without ever introducing any error, such as roundoff or truncation. As if this weren't enough, the calculations provide automatic error analysis, and obviate most forms of successive approximation. This means we can start with an arithmetic expression like $\sqrt{3/\pi^2} + e \;/\; (\tanh \sqrt{5} - \sin 69)$ and immediately begin to produce the value as a sequence of continued fraction terms (or even decimal digits, if we should be so reactionary), limited only by time and storage. If there are quantities in the expression which are known only approximately, the calculation can provide error bounds on the answer as well as identify the quantity that limited the significance.

All this is possible because each operation (+, /, -, $\sqrt{\ }$) in the arithmetic expression requests terms from the continued fractions of its operands only when necessary, and consequently produces terms of its own value as soon as possible. Numbers like π and e and functions like sin and tanh have continued fraction terms in simple sequences which can be produced by short programs. Imprecise quantities can also be programs which deliver terms until they run out of confidence, whereupon they initiate special action. By then, the last guaranteeable term of the overall expression will have already been produced.

We see then that no calculation is performed unnecessarily, so that, for example, a subexpression which happened to be multiplied by zero would never be evaluated. Also, an operation detecting a deficiency in two or more of its operands provides a natural mechanism for allocating multiprocessor resorces, should you have some.

Here are the algorithms for the elementary arithmetic operations on continued fractions.

Let x be a continued fraction $p_0 + q_0/(p_1 + q_1/(\ldots = p_0 + q_0/x'$ where x' is again a continued fraction and the p's and q's are integers. We shall call a (p q) pair a "term" of the continued fraction for x. Often, only the p's are mentioned, in which case the q's are implicitly all 1, and x is called a "regular" continued fraction.

Instead of a list of p's and q's, let x be a computer subroutine which produces its next p and q each time it is called. Thus on its first usage x will "output" p_0 and q_0 and, in effect, change itself into x'. Similarly, let y be another procedurally represented continued fraction $r_0 + s_0/y'$. Our problem will be solved if we can write such subroutines for z(x,y) = x+y, x-y, xy, and x/y. When called upon to output a term of z, the subroutine might in turn call for (or "input") terms from x and y until it is satisfied that the unread portions of x and y cannot affect the pending term of z. Then it would output this term and change itself into z', so that it could produce the next term next time. Unfortunately, when we try to do this, our expressions quickly complicate. Let us preempt this complication by computing instead the more general function

$$z(x,y) = (axy+bx+cy+d)/(exy+fx+gy+h)$$

(or (a b c d)/(e f g h) for short) where a through h are integer variables whose initial values we are free to choose. Various choices express

addition:	x+y = (0 1 1 0)/(0 0 0 1),
subtraction:	x-y = (0 1 -1 0)/(0 0 0 1),
multiplication:	xy = (1 0 0 0)/(0 0 0 1), and
division:	x/y = (0 1 0 0)/(0 0 1 0).

As we shall see, the process of inputting terms of x and y and outputting terms of z will reduce to replacing the eight integers a through h with linear combinations of each other.

When z inputs a term of x, z becomes a new function of x'. To see how this happens, substitute $p + q/x'$ for every occurrence of x in the expression for z(x,y), then multiply numerator and denominator through by x':

$$z(x',y) = (pa+c\ pb+d\ qa\ qb)/(pe+g\ pf+h\ qe\ qf).$$

If x was rational and has run out of terms, it has in effect become infinite:

$$z(\infty,y) = (0\ 0\ a\ b)/(0\ 0\ e\ f)$$

If instead we input a term of y by substituting r + s/y' for every occurrence of y:

$$z(x,y') = (ra+b\ sa\ rc+d\ sc)/(re+f\ se\ rg+h\ sg).$$

If y runs out of terms:

$$z(x,\infty) = (0\ a\ 0\ c)/(0\ e\ 0\ g)$$

To output the term (t u), so that z = t + u/z' (i.e., z' = u/(z-t)):

$$z'(x,y) = (ue\ uf\ ug\ uh)/(a-te\ b-tf\ c-tg\ d-th).$$

Thus this basic eight variable form is preserved by all three operations, which can be performed in any order since they represent independent substitutions.

For simplicity, let us assume that z will output in standard form, that is, every u = 1 (regular) and every output term $t \geq 1$ except perhaps the first. This means that z' will always exceed 1 and thus $0 \leq u/z' < 1$, so that the integer t = z - u/z' must = [z], the greatest integer $\leq$ z.

Since z generally varies with x and y, it should not output unless [z] is constant for the range of possible x and y. We can easily compute the range of z given the ranges of x and y if we represent each range by the endpoints of an interval (in either order), along with a bit indicating Inside or Outside. Thus if z is in standard form, we can say that z will always be (Inside 1 ∞) (or (Outside $-\infty$ 1)) after the first term. If z were to always output its nearest integer instead of its greatest, then none of the terms after the first would be 1, although they would probably vary in sign. In this case, z would be (Outside -2 2).

Now hold y fixed and examine the behavior of z with x. If x is (Inside a b) then z is (Inside z(a) z(b)) unless the denominator of z changes sign between a and b (i.e., z has its pole in this interval), whereupon z is (Outside z(a) z(b)). Symmetrically, when x is (Outside a b) then z is (Outside z(a) z(b)) unless the signs of the denominators of z(a) and z(b) differ, whereupon z is (Inside z(a) z(b)). This argument still holds with x and y interchanged.

Now suppose that with y fixed at one of its endpoints, x constrains z (Inside 1 2), and at y's other extreme, z(x) is (Outside 0 3). Suppose further that at the two extremes of x, z(y) is (Inside 1 3) and (Outside 0 2). Then z(x,y) is (Outside 0 1), the union of the four ranges. (Outside 0 2) is the widest, indicating that z will probably get more information from a term of y than a term of x. (Topology hackers should recognize this Inside-Outside nonsense as ordinary intervals in toroidal space. The clue is that both plus and minus infinity are denoted by the empty continued fraction.)

Due to the basically monotonic behavior of z, we can guarantee that the actual range of z will be the union of these four ranges, and that this range will be Inside or Outside some interval. If it is (Inside z1 z2) and [z1] = [z2], z can output the term t = [z1]. Otherwise, z must input a term from x or y, whichever was associated with the widest of the four ranges of z. (Outside narrowness) is wider than (Outside wideness) is wider than (Inside wideness) is wider than (Inside narrowness).

Evaluating z on these endpoints may be facilitated by keeping estimates for the integer variables in floating point.

Even if z doesn't produce a term, narrowing the range of possible z will still help in computing the range of a function of z, especially if z gets stuck trying to output the last term of a rational number resulting from irrational x and y. (There is no way to guarantee that x or y won't eventually deviate, whereupon z would egest a gigantic term.)

z can produce its value as decimal digits by multiplying by 10 instead of reciprocating, after outputting t = [z]:

z'(x,y) = (10(a-te) 10(b-tf) 10(c-tg) 10(d-th))/(e f g h).

Strange to say, it is not serious if z for some reason outputs the terms 7 5 1 when it should have produced 6 9. As soon as permitted, it will simply recant with 0 -1 -5 and continue with the correction -1 9. The sequence 7 5 1 0 -1 -5 -1 9 is equivalent to 6 9 because b 0 c is the same as b+c. In order to undo these computations, z violates the condition (Outside -1 1) when it is 0 -1 -5 ... . This condition is obeyed by nearly all convergent continued fractions after their first term, and its violation will very probably cause further retractions among the functions dependent upon z.

This computation reversal trick is also handy for mechanizing and denoting imprecise quantities. Instead of 2.997930 ±.000003, we have 2 1 481 0 2, meaning between 2 1 481 and 2 1 483. Similarly, 137 26 0 1 replaces 137.0373 ±.0006.

Successive approximations methods benefit considerably from not requesting terms until needed. Consider Newton's method for algebraic roots. We expect successive approximations to have about twice as many correct terms each time. Since the production of these terms cannot be aided by reading incorrect terms, the additional correct terms must be produced before the bad ones of the previous approximation are used. But this means that there is no need to read in the bad ones at all. By feeding back the output terms in place of the approximation, we get the correct answer directly! (69% of the credit for this goes to Schroeppel.)

The basic eight variable form exemplified above by z(x,y) is not the only form preserved by continued fraction term transactions. We need only four variables and a single interval check to compute z(x) = (ax+b)/(cx+d), the homographic function of one argument. On the other hand, z(w,x,y) (linear in all three arguments) requires sixteen variables and a twelve way interval check. Each of these forms can be solved for x in terms of z etc. to get a function of the same form. This is not true of

$$z(x) = (ax^2+bx+c)/(dx^2+ex+f),$$

for example, even though this form is also preserved. This form is not guaranteed monotone, thus theoretically invalidating the interval check algorithm, but it hardly ever errs. Even if it did, it would quickly correct itself anyway. This form is not only more economical than z(x,x), it is essential for the success of the Newton's method feedback trick, which must know when two variables are really the same one.

By choosing the eight coefficients a through h properly, it should be possible to rewrite arithmetic expressions as compositions of considerably fewer of these forms than one for each +, -, *, and /. The reader is invited to investigate the problem of trying to find minimal representations. Depending on the metric for minimality, the question can be complicated by allowing higher powers of x and y. If the highest powers of x, y, z, ... in an invariant form are i, j, k, ..., then the number of integer variables required for the coefficients (mostly because of all of the cross terms) is 2(i+1)(j+1)(k+1)... .

It is awkward in this system to evaluate transcendental functions of irrational arguments. The problem is that you may need any number of continued fraction (or series) terms which, instead of being numbers, are symbolic functions of x, some infinite continued fraction. My suggestion is to represent each symbolic term of the function by a subroutine which is a function of x and the next term, with this next term really a dummy until actually called upon for output, whereupon it replaces itself with a full fledged term subroutine which in turn refers to x and a new dummy.

Sad to say, the integer variables in these algorithms do not usually shrink on outputs as much as they grow on inputs. Fortunately, the operations for input and output only require (besides addition) multiplication by terms which are almost invariably small. (I have not seen a term exceed 20776 except in specially constructed numbers.) It is fairly safe, then, to declare any function which has gotten (Outside -2^{35} 2^{35}) to be infinite, thus terminating its continued fraction. Better still, note that the term 20776 is equivalent to the terms 20000 0 700 0 70 0 6, i.e., a very large term can be transmitted piecewise. Although this is just thinly disguised multiprecision multiplication, that first piece of the term will probably satisfy its recipient for quite some time.

In some special cases, the integer variables will become periodic rather than large, especially when all but one of the arguments to a function have terminated. Then, we have the form $z(x) = (ax+b)/(cx+d)$, known as a homographic function. If ad-bc is ± 1, then a, b, c, d will eventually become 1, 0, 0, 1, whereupon z will output the terms of x unmodified. Periodicity will also occur when x is a Hurwitz number, i.e., when the terms of x are the values of one or more polynomials evaluated on consecutive integers and then interleaved. Coth 1/69, $\sqrt{105}$, and e are Hurwitz numbers whose polynomials are linear or constant. Hurwitzness is preserved by homographic functions. If one can show that π is not a Hurwitz number, one confirms the long standing conjectures that $e*\pi$, $e+\pi$, e/π, etc. are all irrational.

If z, x, and y are all regular, then it generally won't be possible to reduce z by finding a GCD of a through h which is > 1. However, it has been determined empirically that much reduction is often possible in other cases. This reduction is almost always by a divisor of an input or output term numerator (or 10 if output is decimal digits) and can be facilitated by keeping cetain of the integer variables around modulo these quantities.

ITEM 101C (Gosper):
Problem: Given an interval, find in it the rational number with smallest numerator and denominator.
Solution: Express the endpoints as continued fractions. Find the first term where they differ and add 1 to the lesser term, unless it's last. Discard the terms to the right. What's left is the continued fraction for the "smallest" rational in the interval. (If one fraction terminates but matches the other as far as it goes, append an infinity and proceed as above.)

****
GROUP THEORY
****

ITEM 102 (Schroeppel):
As opposed to the usual formulation of a group,
where you are given
1 there exists an I such that A * I = I * A = A, and
2 for all A, B and C, (A * B) * C = A * (B * C), and
3 for each A there exists an $\overline{A}$ such that

$$A * \overline{A} = \overline{A} * A = I, \text{ and}$$

4 sometimes you are given that I and $\overline{A}$ are unique.
If instead you are given A * I = A and A * $\overline{A}$ = I, then
the above rules can be derived. But if you are given A * I = A
and $\overline{A}$ * A = I, then something very much like a group, but not
necessarily a group, results. For example, every element is
duplicated.

ITEM 103 (Gosper):
The Hamiltonian paths through the N! permutations of N objects
using only SWAP (swap any specific pair) and ROTATE (1 position)
are as follows:

N	PATHS + DISTINCT REVERSES
2	2 + 0, namely: S, R
3	2 + 1, namely: SRRSR, RRSRR
4	3 + 3, namely:
	SRR RSR SRR RSR RRS RSR RSR RR
	RSR SRR RSR RRS RSR RRS RSR RR
	SRR RSR RRS RRS RSR RRS RRR SR

PROBLEM: A questionable program said there are none for N = 5;
is this so?

ITEM 104 (Schroeppel):
Any permutation on 72 bits can be coded with a routine
containing only the PDP-6/10 instructions "ROT" and "ROTC".

****
SET THEORY
****

ITEM 105 (Komolgoroff, maybe?):
Given a set of real numbers, how many sets can you
get using only closure and complement? Answer: 14.

QUATERNIONS

ITEM 107 (Salamin):

A quaternion is a 4-tuple which can be regarded as a scalar plus a vector. Quaternions add linearly and multiply (non-commutatively) by

$$(S1+V1)(S2+V2) = S1\ S2 - V1.V2 + S1\ V2 + V1\ S2 + V1 \times V2$$

where
S=scalar part, V=vector part, .=dot product, ×=cross product.
If $Q = S+V = (Q0,Q1,Q2,Q3)$, then $S = Q0$, $V = (Q1,Q2,Q3)$.
Define conjugation by $(S+V)^* = S-V$. The (absolute value)^2 of a quaternion is $Q0^2 + Q1^2 + Q2^2 + Q3^2 = Q\ Q^* = Q^*\ Q$.

The non-zero quaternions form a group under multiplication with $(1,0,0,0) = 1$ as identity and $1/Q = Q^*/(Q^*\ Q)$. The unit quaternions, which lie on a 3-sphere embedded in 4-space, form a subgroup. The mapping $F(Q) = PQ$ (P a unit quaternion) is a rigid rotation in 4-space. This can be verified by expressing PQ as a 4×4 matrix times the 4-vector Q, and then noting that the matrix is orthogonal. F(Q) restricted to the unit quaternions is a rigid rotation of the 3-sphere, and because this mapping is a group translation, it has no fixed point.

We can define a dot product of quaternions as the dot product of 4-vectors. Then $Q1.Q2 = 0$ iff Q1 is perpendicular to Q2. Let N be a unit vector. To each unit quaternion $Q = S+V$, attach the quaternion $NQ = -N.V + N\ S + N \times V$. Then it is seen that $(NQ).(NQ) = N.N = 1$ and $(NQ).Q = 0$. Geometrically this means that NQ is a continuous unit 4-vector field tangent to the 3-sphere. No such tangent vector field exists for the ordinary 2-sphere. Clearly the 1-sphere has such a vector field.
PROBLEM: For which N-spheres does a continuous unit tangent vector field exist?

Let W be a vector (quaternion with zero scalar part) and $Q = S+V$. Then $Q\ W\ Q^* = (S^2 + V.V)W + 2\ S\ V \times W + 2\ V(V.W)$. Let N be a unit vector and Q the unit quaternion $Q = \pm(\cos(\theta/2) + N \sin(\theta/2))$. Then $Q\ W\ Q^* = (\cos\theta)W + (\sin\theta)(N \times W) + (1-\cos\theta)N(N.W)$, which is W rotated thru angle θ about N. If Q thus induces rotation R, then Q1 Q2 induces rotation R1 R2. So the projective 3-sphere (+Q and -Q identified) is isomorphic to the rotation group (3×3 orthogonal matrices). Projectiveness is unavoidable since a 2π rotation about any axis changes $Q = 1$ continuously into $Q = -1$.

Let U be a neighborhood of the identity in the rotation group (ordinary 3 dimensional rotations) and U1 the corresponding set of unit quaternions in the neighborhood of 1. If a rotation R carries U into U', then a quaternion corresponding to R carries U1 into U1'. But quaternion multiplication is a rigid rotation of the 3-sphere, so U1 and U1' have equal volume. This shows that in the quaternion representation of the rotation group, the Haar measure is the Lebesgue measure on the 3-sphere.

Every rotation is a rotation by some angle θ about some axis. If rotations are chosen "uniformly", what is the probability distribution of θ? By the above, we choose points uniformly on the 3-sphere (or hemisphere since it is really projective). Going into polar coordinates, one finds $P(\theta) = (2/\pi)(\sin\theta/2)^2$, $0 < \theta < \pi$. In particular, the expected value of θ is $\pi/2+2/\pi$.

Quaternions form a convenient 4-parameter representation of rotations, since composition of rotations is done by quaternion multiplication. In contrast, 3-parameter representations like Euler angles or (roll, pitch, yaw) require trigonometry for composition, and orthogonal matrices are 9-parameter. In space guidance systems under development at D-lab, the attitude of the spacecraft is stored in the guidance computer as a quaternion.

****
POLYOMINOS, ETC.
****

ITEM 108:
See the PROPOSED COMPUTER PROGRAMS section
for counts of polyominos of orders < 19.

ITEM 109 (Schroeppel):
Tessellating the plane with polyominos:
Through all hexominos, the plane can be tessellated with each piece (without even flipping any over). All but the four heptominos below can tessellate the plane, again without being flipped over. Thus, flipping does not buy you anything through order 7. (There are 108 heptominos).

```
H   H   HHH     H      H
HHHHH   H H   HHHH   HHHH
         HH     H      H
                H      H
```

ITEM 110 (Schroeppel):
PROBLEM: What rectangles are coverable
by various polyominos? For example,

XX
X — can cover rectangles which are 3N × M, except if N = 1, then M must be even.

YYYY — can be shown by coloring to cover only rectangles having at least one side divisible by four.

ITEM 111 (Schroeppel):
PROBLEM: Find a necessary and sufficient condition for an arbitrary shape in the plane to be domino coverable.

ITEM 112 (Beeler):
"Iamonds" are made of equilateral triangles, like diamonds.
"(Poly-)ominos" are made of squares, like dominos.
"Hexafrobs" are made of hexagons.
"Soma-like" pieces are made of cubes.
See also "Polyiamonds," Math. Games, Sci. Am., December 1964.
Left and right 3-dimensional forms are counted as distinct.

ORDER	IAMONDS	OMINOS	HEXA'S	SOMA-LIKE
1	1	1	1	1
2	1	1	1	1
3	1	2	3	2
4	3	5	7	8
5	4	12	22	29
6	12	35		
7	24			
8	66			
9	160			
10	448			

Polyominos of order 1, 2 and 3 cannot form a rectangle. Orders 4 and 6 can be shown to form no rectangles by a checkerboard coloring. Order 5 has several boards and its solutions are documented (Communications of the ACM, October 1965):

BOARD	DISTINCT SOLUTIONS
3 × 20	2
4 × 15	368
5 × 12	1010
6 × 10	2339 (verified)

two 5 × 6 -- 2

8 × 8 with 2 × 2 hole in center -- 65

CONJECTURE (Schroeppel): If the ominos of a given order form rectangles of different shapes, the rectangle which is more nearly square will have more solutions.

Order-4 hexafrob boards and solution counts:

side 7 triangle -- no solutions

parallelogram, base 7, side 4 -- 9 distinct solutions

e.g.,
```
A A A A B C C
 D E B B C F C
  D E E B F G G
   D D E F F G G
```

Order-6 iamond boards and solution counts (see illustration):

side 9 triangle with inverted side 3 triangle in center removed -- no solutions

trapezoid, side 6, bases 3 and 3+6 -- no solutions

two triangles of side 6 -- no solutions

trapezoid, side 4, bases 7 and 7+4 -- 76 distinct solutions

parallelogram, base 6, side 6 -- 156 distinct solutions

parallelogram, base 4, side 9 -- 37 distinct solutions

parallelogram, base 3, side 12 -- no solutions

triangle of side 9 with triangles of side 1, 2 and 2 removed from its corners (a commercial puzzle) -- 5885 distinct solutions

With Soma-like pieces, orders 1, 2 and 3 do not have interesting boxes. Order 4 has 1390 distinct solutions for a 2 × 4 × 4 box. 1124 of these have the four-in-a-row on an edge; the remaining 266 have that piece internal. 320 solutions are due to variations of ten distinct solutions decomposable into two 2 × 2 × 4 boxes. A Soma-like 2 × 4 × 4 solution:

```
AAAA    BBHH
BCCC    BHHC
DDDE    FGGE
FDGE    FFGE
```

The commercial Soma has 240 distinct solutions; the booklet which comes with it says this was found years ago on a 7094. Verified by both Beeler and Clements.

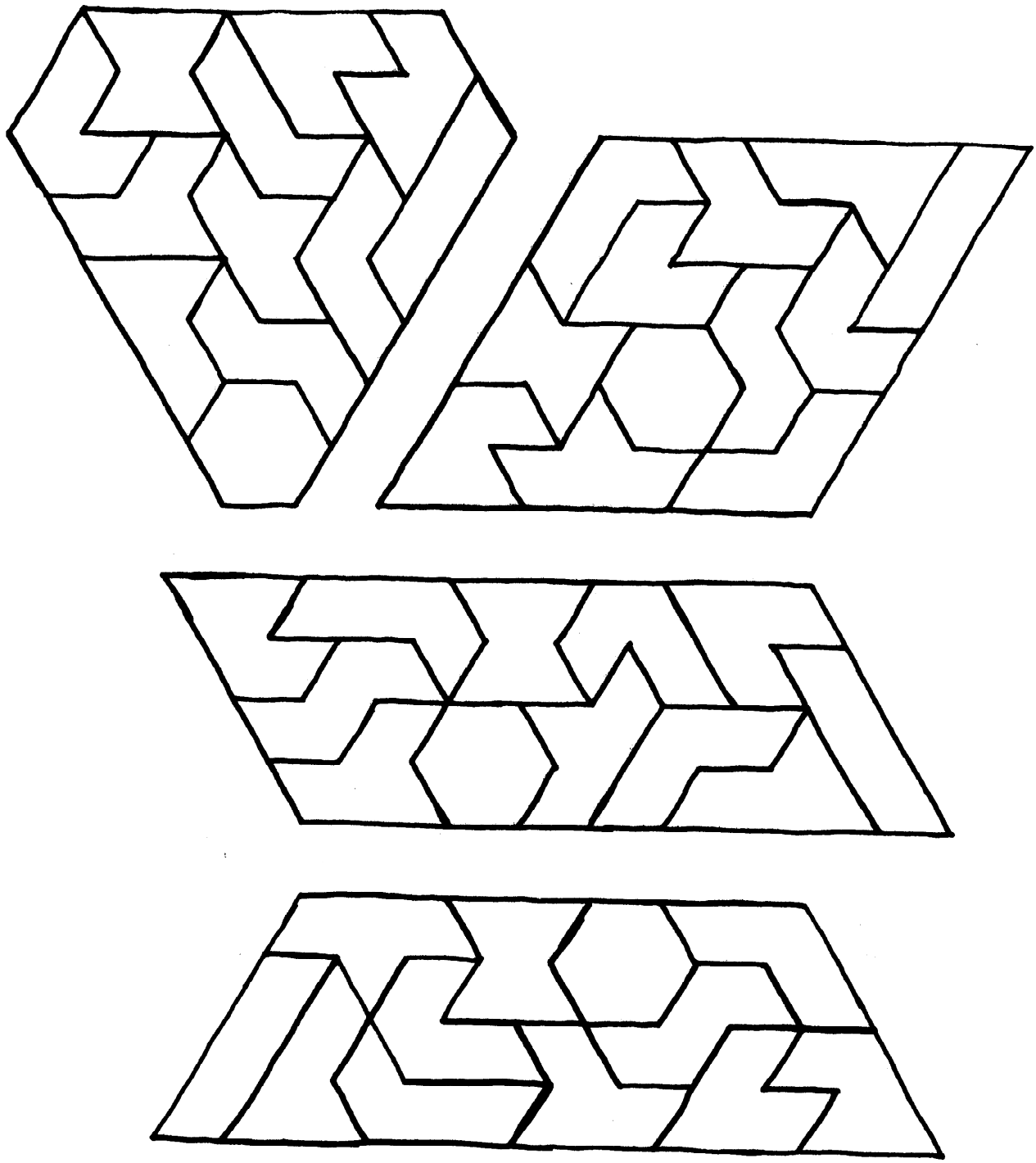

Figure 5. Some hexiamond solutions.

****
TOPOLOGY
****

ITEM 113:
Although not new (cf Coxeter, Introduction to Geometry, 1st ed. p393), the following coloring number (chromatic number) may be useful to have around:

$$N = [[(7 + \sqrt{48\ H + 1})/2]]$$

where N is the number of colors required to color any map on an object which has H holes (note: proof not valid for H = 0).
For example:
A donut (holes = 1) requires 7 colors to color maps on it.
A 17-hole frob requires 17 colors.
An 18-hole frob requires 18 colors.

ITEM 114 (Schroeppel):
A most regular 7-coloring of the torus can be made by tiling the plane with the following repeating pattern of hexagons of 7 colors:

```
 A A       C C       E E
A A A     C C C     E E E
 A A  F F  C C  A A  E E
     F F F     A A A
 B B  F F  D D  A A  F F
B B B     D D D     F F F
 B B  G G  D D  B B  F F
     G G G     B B B
 C C  G G  E E  B B  G G
C C C     E E E     G G G
 C C  A A  E E  C C  G G
     A A A     C C C
 D D  A A  F F  C C  A A
D D D     F F F     A A A
 D D  B B  F F  D D  A A
     B B B     D D D
 E E  B B  G G  D D  B B
E E E     G G G     B B B
 E E  C C  G G  E E  B B
     C C C     E E E
      C C       E E
```

Draw an area 7 unit cell parallelogram by connecting, say, the center B's in each of the four
```
 B B
B B B
 B B
```
. Finally, join the opposite sides of the parallelogram to form a torus in the usual (Spacewar) fashion. QUESTION (Gosper): is there a toroidal heptahedron corresponding to this?

A spacefilling curve is a continuous map T → X(T),Y(T), usually from the unit interval onto the unit square, often presented as the limit of a sequence of curves made by iteratively quadrisecting the unit square. Each member of the sequence is then 4 copies of its predecessor, connected in the shape of an inverted V, with the first member being a V which connects 0,0 to 1,0. The limiting map, X(T) and Y(T), can be computed instead by a simple, finite-state machine having 4 inputs (digits of T base 4), 4 outputs (one bit of X and one bit of Y), and 4 states (2 bits) of memory (the number modulo 2 of 0's and 3's seen in T).

Let T, X, and Y be written in binary as:

```
T=.A B A B A B ...   X=.X X X X X X ...   Y=.Y Y Y Y Y Y ...
   1 1 2 2 3 3          1 2 3 4 5 6          1 2 3 4 5 6
```

ALGORITHM S:

```
        C  ← 0  ;# of 0's mod 4
         0

        C  ← 0  ;# of 3's mod 4
         1

S1:     X  ← A  XOR C            ;Ith bit of X
         I     I      NOT B
                        I
        Y  ← X  XOR B            ;Ith bit of Y
         I     I      I

        C  ← C  XOR (NOT A  AND NOT B ) ;count 00's
         0     0           I           I

        C  ← C  XOR (A  AND B ) ;count 11's
         1     1        I      I

        GO S1
```

OLD C 0	OLD C 1	A I	B I	X I	Y I	NEW C 0	NEW C 1
0	0	0	0	0	0	1	0
0	0	0	1	0	1	0	0
0	0	1	0	1	1	0	0
0	0	1	1	1	0	0	1
0	1	0	0	1	1	1	1
0	1	0	1	0	1	0	1
0	1	1	0	0	0	0	1
0	1	1	1	1	0	0	0
1	0	0	0	0	0	0	0
1	0	0	1	1	0	1	0
1	0	1	0	1	1	1	0
1	0	1	1	0	1	1	1
1	1	0	0	1	1	0	1
1	1	0	1	1	0	1	1
1	1	1	0	0	0	1	1
1	1	1	1	0	1	1	0

This is the complete state transition table.

To carry out either the forward or reverse map, label a set of columns as in the table above. Fill in whichever you know of AB or XY, with consecutive rows corresponding to consecutive I's. Put 0 0 in the top position of the OLD CC column. Exactly one row of the above table will match the row you have written so far. Fill in the rest of the row. Copy the NEW CC entry to the OLD CC column in the next row. Again, only one row of the state table will match, and so forth. For example, the map 5/6 → (1/2,1/2) (really .11010101... → (.1000... ,.0111...)):

OLD C 0	OLD C 1	A I	B I	X I	Y I	NEW C 0	NEW C 1
0	0	1	1	1	0	0	1
0	1	0	1	0	1	0	1
0	1	0	1	0	1	0	1
0	1	0	1	0	1	0	1
.	.	.		.	.	.	.
.	.	.		.	.	.	.
	=	5/6		1/2	1/2		

We note that since this is a one-to-one map on bit strings, it is not a one-to-one map on real numbers. For instance, there are 2 ways to write 1/2, .1000... and .0111..., and thus 4 ways to write (1/2,1/2), giving 3 distinct inverses, 1/6, 1/2, and 5/6. Since the algorithm is finite state, X and Y are rational iff T is, e.g., 898/4369 → (1/5,1/3). The parity number, (see SERIES section) and 1-(parity number) are the only reals satisfying X(T)=T, Y(T)=1. This is related to the fact that they have no 0's and 3's base 4, and along with 0, 1/2, and 1=.111..., are the only numbers preserved by the deletion of their even numbered bit positions.

SERIES

ITEM 116 (Schroeppel & Gosper):

$$\sum_{N=0}^{\infty} \frac{N!N!}{(2N)!} = \frac{4}{3} + \frac{2\pi}{9\sqrt{3}} .$$ PROBLEM: Evaluate in closed form

$$\sum_{N=0}^{\infty} \frac{N!N!N!}{(3N)!}$$, which $= \int_0^1 (P + Q \arccos(R))\, dT$, where

$$P = \frac{2\,(8 + 7\,T^2 - 7\,T^3)}{(4 - T^2 + T^3)^2}$$

and

$$Q = \frac{4\,(T - T^2)\,(5 + T^2 - T^3)}{(4 - T^2 + T^3)^2\,\sqrt{(4 - T^2 + T^3)\,(1 - T)}}$$

and

$$R = 1 - \frac{T^2 - T^3}{2} .$$

ITEM 117 (Henry Cohen):

$$\gamma = -\ln X + X - \frac{X^2}{2*2!} + \frac{X^3}{3*3!} - \frac{X^4}{4*4!} \ldots + \text{ERROR}$$

Where ERROR is of the order of $(e^{-X})/X$.

ITEM 118 (Schroeppel): Differentiate $Ye^{-Y} = X$ to get $Y+YXY'-XY' = 0$. Substitute for Y a power series in X with coefficients to be determined. One observes the curious identity:

$$\sum_{J=1}^{N} (\text{BINOMIAL } N\ J)\,J^{J-1}\,(N-J)^{N-J} = N^N \qquad (0^0=1)$$

and thus $Y(X) = \sum_{N=1}^{N-1} N^N X^N/N!$

ITEM 119 (Schroeppel):
PROBLEM: Can someone square some series for π to give the series $\frac{\pi^2}{6} = \frac{1}{1^2} + \frac{1}{2^2} + \ldots = \sum \frac{1}{N^2}$?

ITEM 120 (Euler):
The series accelerating transformation
(Abramowitz & Stegun, sec. 3.6.27)

$$A0-A1+A2-\ldots = \sum_{K} (-)^K (\Delta^K A0)/2^{K+1}$$

(where $(\Delta^K A0) = \sum_{M=0}^{K} (-)^{K-M}$ (BINOMIAL K M) AM = Kth forward difference on A0) when applied to

$$\pi = 1 - \frac{1}{3} + \frac{1}{5} - \ldots \text{ gives } \frac{\pi}{4} = \sum \frac{2^{N-1}\, N!^2}{(2N+1)!} .$$

Applied to the formula for γ in Amer. Math. Monthly (vol. 76, #3, Mar69 p273) = $\sum (-)^T \frac{T^{[\log_2 T]}}{T}$
([ ] mean integer part of) we get

$$\sum_{K=1}^{\infty} \frac{2^{-(K+1)}}{\sum_{J=0}^{K-1} 1/(\text{BINOMIAL } 2K\text{-}2J\ J)}$$

(Gosper) which converges fast enough for a few hundred digits.
The array of reciprocals of the terms follows, with powers of 2 factored out to the left from all members of each row.

```
4                1
8              1   3
16           1   5   6
32         1   9  15  10
64       1  17  45  35  15
128    1  33 153 165  70  21
256  1  65 561 969 495 126  28
```

The next to left diagonal is 2^{N+1}; the perpendicular one 3rd from the right is 1, *9/1= 9, *10/2= 45, *11/3= 165, *12/4= 495.

ITEM 121 (Gosper):
Consider the triangular array:

```
              1
            1   1
          1   4   1
        1  11  11  1
      1  26  66  26  1
    1  57 302 302  57  1
```

This bears an interesting relationship to Pascal's triangle. The 302 in the 4th southeast diagonal and the 3rd southwest one = 4*26 + 3*66. Note that rows then sum to factorials rather than powers of 2. If the nth row of the triangle is dotted with any n consecutive elements of (either) n+1st diagonal of Pascal's triangle, we get the nth Bernoulli polynomial: for n = 5, 1(6,i) + 26(6,i+1) + 66(6,i+2) + 26(6,i+3) + 1(6,i+4) = sum of 5th powers of 1 thru i+5, where (j,i) = BINOMIAL (j+i j).

ITEM 122 (Schroeppel, Gosper):

$$\text{The "parity number"} = \frac{1}{2}\sum_{N=0}^{\infty} (\text{parity of } N) * 2^{-N}$$

where the parity of N is the sum of the bits of N mod 2.
The parity number's value is .41245403364010759 77..., or,
for hexadecimal freaks, .6996966996696996... . It can be
written (base 2) in stages by taking the previous stage,
complementing, and appending to the previous stage:

.0
.01
.0110
.01101001
.0110100110010110
.0110100110010110 1101001... radix 2

i.e., stage 0 = 0
stage N+1 = stage N + $(1-2^{-2^N}-\text{stage } N)/2^{2^N}$.

If NUM 0 = 0, DEN 0 = 2
NUM N+1 = $((\text{NUM } N)+1)*((\text{DEN } N)-1)^{N+1}$
DEN N+1 = $(\text{DEN } N)^2 = 2^{2^N}$

then $\frac{\text{NUM N+1}}{\text{DEN N+1}} = \text{stage N+1} = (\text{stage N} + 2^{-2^N})*(1 - 2^{-2^N})$.

Or, faster, by substituting in the string at any stage:
the string itself for zeros, and
the complement of the string for ones.
It is claimed (perhaps proven by Thue?)
that the parity number is transcendental.

Its regular continued fraction begins: 0 2 2 2 1 4 3 5 2 1 4 2 1
5 44 1 4 1 2 4 1 1 1 5 14 1 50 15 5 1 1 1 4 2 1 4 1 43 1 4 1 2 1
3 16 1 2 1 2 1 50 1 2 424 1 2 5 2 1 1 1 5 5 2 22 5 1 1 1 1274 3 5
2 1 1 1 4 1 1 15 154 7 2 1 2 2 1 2 1 1 50 1 4 1 2 867374 1 1 1 5
5 1 1 6 1 2 7 2 1650 23 3 1 1 1 2 5 3 84 1 1 1 1284 ... and seems
to continue with sporadic large terms in suspicious patterns.
A non-regular fraction is

$$1/(3 - 1/(2 - 1/(4 - 3/(16 - 15/(256 - 255/(65536 - 65535/(\ldots 2^{2^N} - (2^{2^N} - 1)/(\ldots .$$

This fraction converges much more rapidly than the regular one,
its Nth approximant being $\frac{1+\text{NUM N}}{1+\text{DEN N}}$, which is, in fact,
an approximant of the regular fraction, roughly the 2^N th.

In addition, 4*(parity number) =

$$2 \cdot \frac{1}{2} * \frac{3}{4} * \frac{15}{16} * \frac{255}{256} * \frac{65535}{65536} * \ldots$$

This gives still another non-regular fraction per the product conversion item in the CONTINUED FRACTION section.

For another property of the parity number, see the spacefilling curve item in the TOPOLOGY section.

ITEM 123 (Schroeppel, Gosper, Salamin):
Consider the image of the circle $|z| = 1$ under the function $f(z) = \Sigma \frac{z^{2^n}}{2^n}$. This is physically analogous to a series of clock hands placed end to end. The first hand rotates around the center (0,0) at some rate. The next hand is half as long and rotates around the end of the first hand at twice this rate. The third hand rotates around the end of the second at four times this rate; etc. It would seem that the end of the "last" hand (really there are infinitely many) would sweep through space very fast, tracing out an (infinitely) long curve in the time the first hand rotates once. The hands shrink, however, because of the 2^n in the denominator. Thus it is unclear whether the speed of the "last" hand is really infinite; or, whether the curve's arc length is really infinite.

Also, it is a visually interesting curve, as are $f(z) = \Sigma \frac{z^{n!}}{n!}$, and $f(z) = \Sigma \frac{z^{FIB(n)}}{FIB(n)}$. Gosper has programmed the one mentioned first, which makes an intriguing display pattern. See following illustrations. If you write a program to display this, be sure to allow easy changing of:
(1) z and $\bar{z}$ on alternate terms (alternate hands rotate in opposite directions),
(2) negation of alternate terms (alternate hands initially point in opposite directions), and
(3) how many terms are used in the computation,
since these cause fascinating variations in the resulting curve.

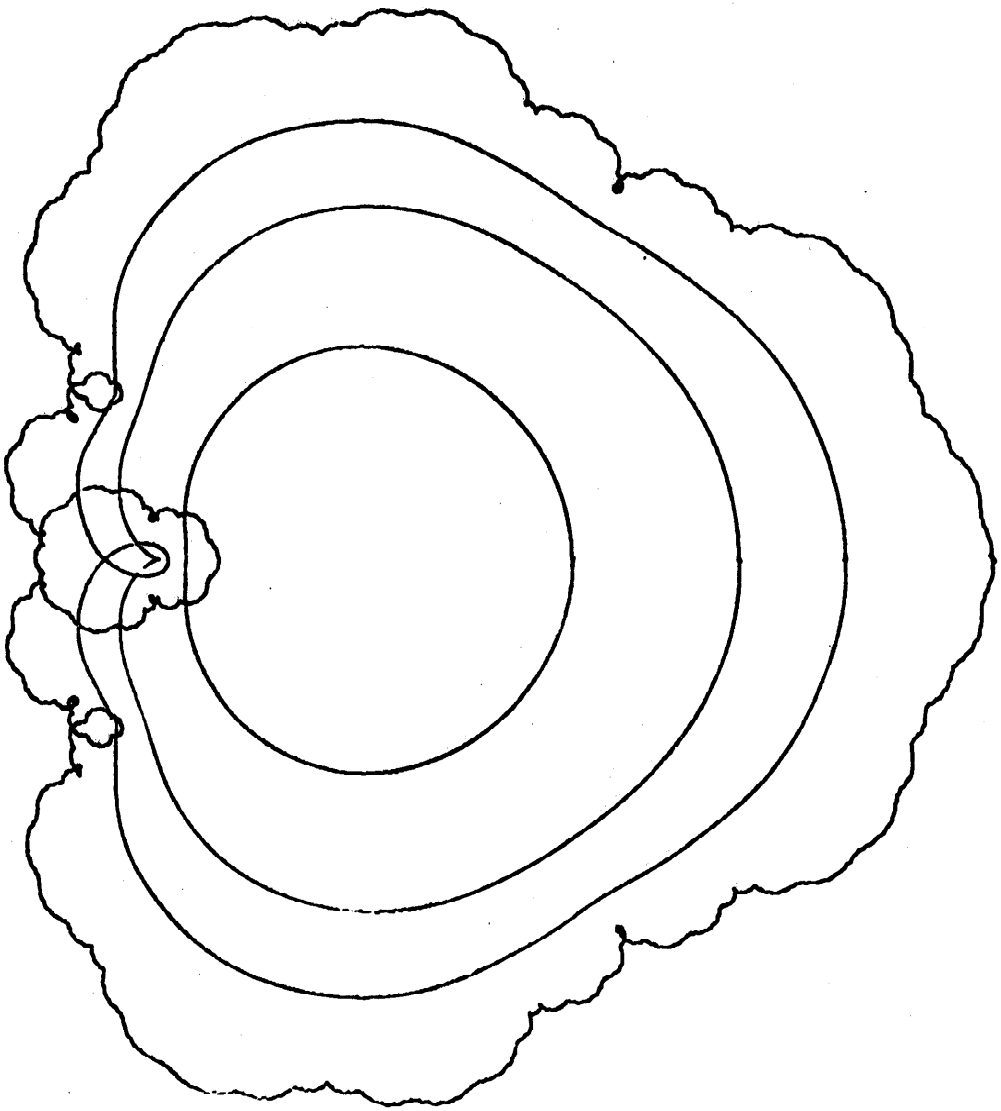

Figure 6(a). Image of circles $|z| = 1/2, 3/4, 7/8, 1$ under the function $f(z) = \sum \frac{z^{n!}}{n!}$.

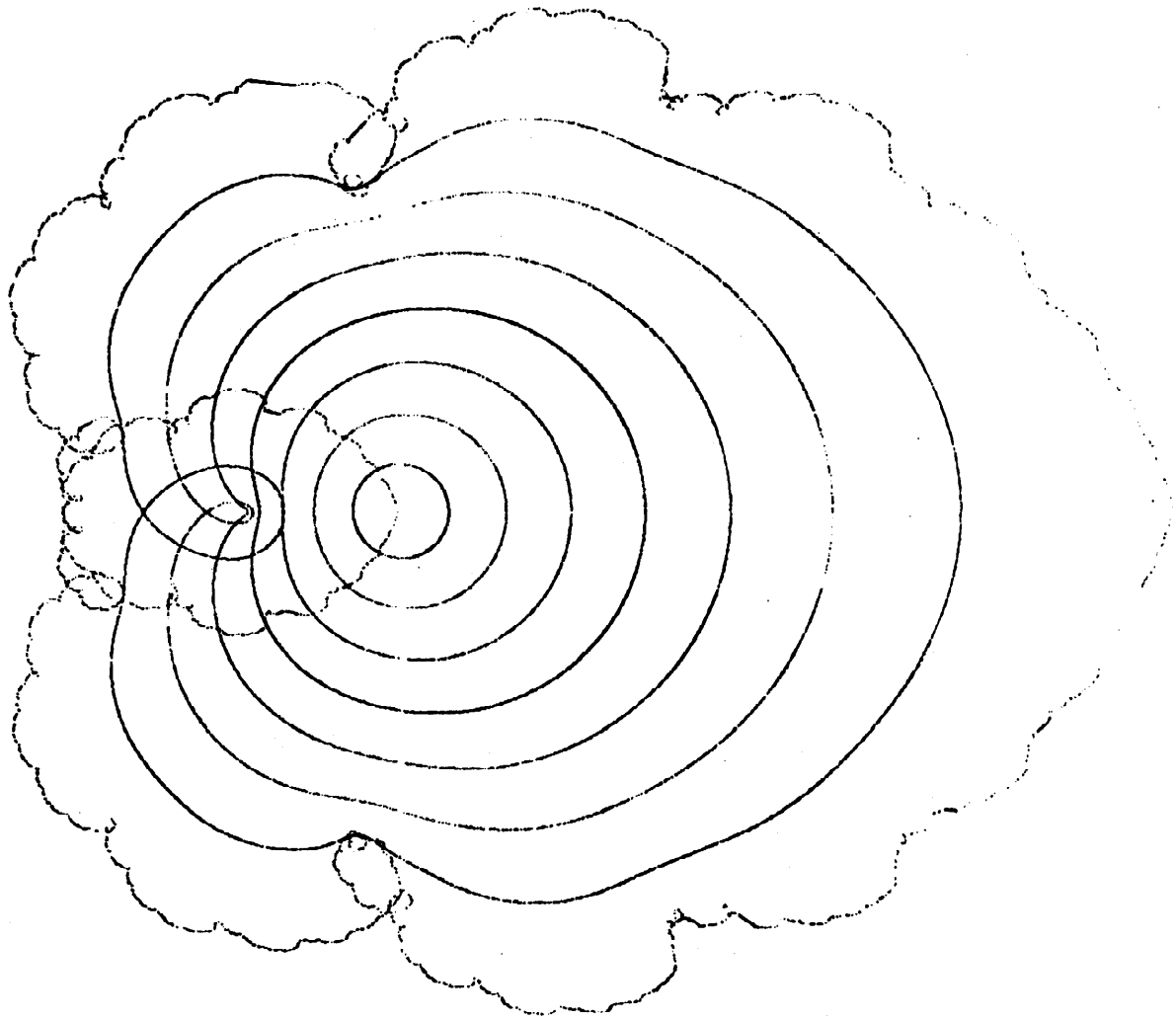

Figure 6(b). Image of circles $|z| = 1/8, 2/8, \ldots, 8/8$ under the function $f(z) = \Sigma \frac{z^{2^n}}{2^n}$.

Both plots by Salamin on the RLE PDP-1.

ITEM 124 (Schroeppel):
Consider

$$\sum \frac{1}{N^2} = \sum \left[\frac{1}{N-1/2} - \frac{1}{N+1/2}\right] + \sum \left[\frac{1}{N^2} - \frac{1}{N^2-1/4}\right] = 2 - \sum \frac{1}{(4N^2-1)*N^2} .$$

Take the last sum and re-apply this transformation.
This may be a winner for computing the original sum.
For example, the next iteration gives

$$\frac{31}{18} - \sum \frac{9}{N^2(4N^2-1)(25N^4+5N^2+9)}$$

where the denominator also =

$$N^2(2N+1)(2N-1)(5N^2+5N+3)(5N^2-5N+3).$$

ITEM 125 (Polya):
CONJECTURE: If a function has a power series with integer coefficients and radius of convergence 1, then either the function is rational or the unit circle is a natural boundary.
Reference: Polya, Mathematics and Plausible Reasoning, volume 2, page 46.

****
FLOWS AND ITERATED FUNCTIONS
****

ITEM 126 (Schroeppel):
An analytic flow for Newton's method square root:
Define $F(X)$ by $\frac{X^2+K}{2X}$; then

$$F(F(F(\ldots(X)))) = \sqrt{K}\,\frac{(X+\sqrt{K})^{2^N} + (X-\sqrt{K})^{2^N}}{(X+\sqrt{K})^{2^N} - (X-\sqrt{K})^{2^N}}$$

[N times]

which $= \sqrt{K}\ (\coth 2^N\ (\operatorname{arccoth} X/\sqrt{K}))$

ITEM 127 (Schroeppel):
P and Q are polynomials in X; when does $P(Q(X)) = Q(P(X))$?
(That is, P composed with Q = Q composed with P.)
Known solutions are:
1 Various linear things.
2 X to different powers, sometimes multiplied by roots of 1.
3 P and Q are each another polynomial R composed
with itself different numbers of times.
4 Solutions arising out of the flow of X^2-2, as follows:
suppose $X = Y + 1/Y$
then $Y^N + Y^{-N}$ can be written as a polynomial in X
for example,
P = the expression for squares = X^2-2 (N = 2)
and Q = the expression for cubes = X^3-3X (N = 3)
5 Replace X by Y-A, then add A to the original constants
in both P and Q. For example, $P = X^2$ and $Q = X^3$,
then $P = 1+(Y-1)^2 = Y^2-2Y+2$ and $Q = 1+(Y-1)^3$,
then $P(Q) = 1+(Y-1)^6 = Q(P)$.
Similarly, replacing X with AY+B works.
6 There are no more through degrees 3 and 4 (checked with
Mathlab); but are there any more at all?

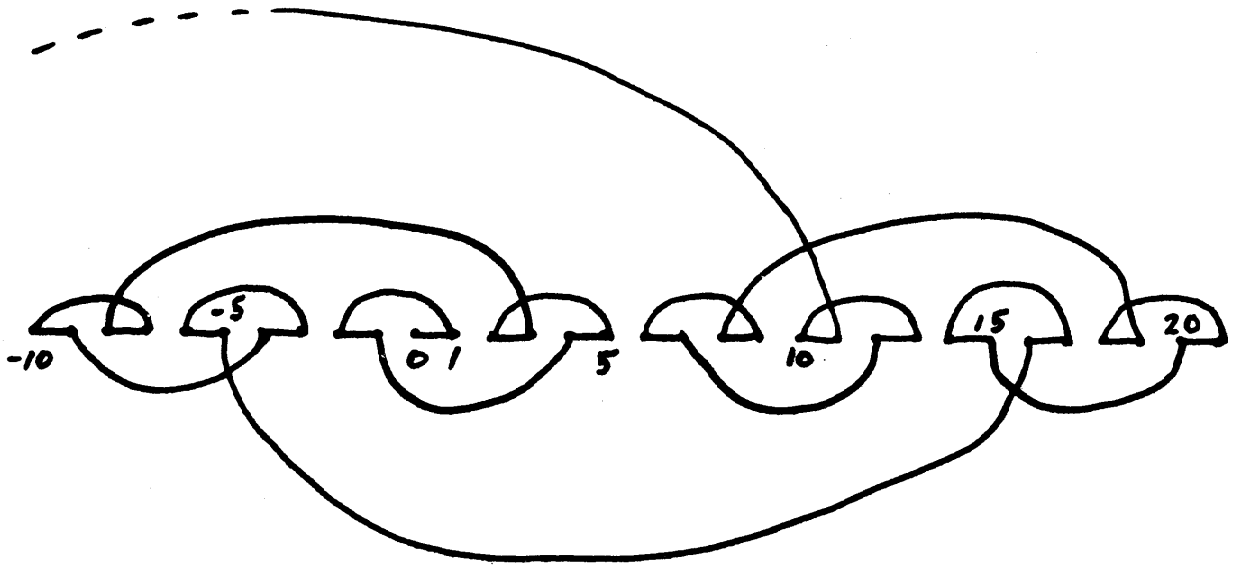

Figure 7. ITEM 128 (Schroeppel):
A map of the process n → binary string → interpret as radix -2, iterated. To convert a number to base -2:
(n + ...101010) XOR (...101010) (reversible).

ITEM 129 (Schroeppel):
PROBLEM: Given F(X) as a power series in X with constant term = 0, write the flow power series.
FLOW sub ZERO = X
FLOW sub ONE = F(X)
FLOW sub TWO = F(F(X))
etc.
NOTE (Gosper): If we remove the restriction that F has a power series, the functions that satisfy an equation of the form F(F(X)) = sin X can be put into one-to-one correspondence with the set of all functions.

ITEM 130 (Salamin):
If $F(X)=X^N$, the P-th flow is X^{N^P}, which has a branch point if N is non-integer. Under the hypotheses of the previous problem, it is possible to find the power series coefficients for P rational, but there is no guarantee the series will converge.
PROBLEM: Is the flow interpolation unique? If it is not, what extra conditions are necessary to make it unique for natural cases like X^N?

ITEM 131 (Schroeppel):
Taking any two numbers A and B, finding their arithmetic mean and their geometric mean, and using these means as a new A and B, this process, when repeated, will approach a limit which can be expressed in terms of elliptic integrals. (See PI section.)

ITEM 132 (Gosper): LOOP DETECTOR

If a function F maps a finite set into itself, then its flow must always be cyclic. If F is one step of a pseudorandom number generator, or the CDR operation on a self referent list, or any function where it is easy to supply former values as arguments, then there are easy ways to detect looping of the flow (Knuth, The Art of Computer Programming, volume 2, Seminumerical Algorithms, sec. 3.1, prob. 7, page 7). If, however, the process of iterated application of the function is inexorable, (i.e., there is no easy way to switch arguments to the function), then the following algorithm will detect repetition before the third occurrence of any value.

Set aside a table TAB(J), $0 \leq J \leq \log 2$ (largest possible period). Let C = the number of times F has been applied, initially 0. Compare each new value of F for equality with those table entries which contain old values of F. These will be the first S entries, where S is the number of times C can be right shifted before becoming 0. No match means F hasn't been looping very long, so increment C and store this latest value of F into TAB(J), where J is the number of trailing zero bits in the binary of C. (The first 16 values of J are: 0, 1, 0, 2, 0, 1, 0, 3, 0, 1, 0, 2, 0, 1, 0, 4, ...; Eric Jensen calls this the RULER function.) A match with entry E means the loop length is 1 more than the low E+2 bits of C - 2^{E+1}.

ITEM 133 (Schroeppel, Gosper, Henneman & Banks) (from Dana Scott?):
The "3N+1 problem" is iteratively replacing N by N/2 if N is even or by 3N+1 if N is odd. Known loops for N to fall into are:
1 the zero loop, 0 → 0
2 a positive loop, 4 → 2 → 1 → 4
3 three negative loops
(equivalent to the 3N-1 problem with positive N)
-2 → -1 → -2
-5 → -7 → -10 → -5
-17 → -25 → -37 → -55 → -82 → -41 →
-61 → -91 → -136 → -68 → -34 → -17
In the range $-10^8 < N < 6 * 10^7$, all N fall into the above loops. Are there any other loops? Does N ever diverge to infinity?

ITEM 134 (Schroeppel, Gosper):
Let N be iteratively replaced by (FLATSIZE (LONGHAND N)), the number of letters in N written longhand (e.g., 69 → SIXTY NINE → 9 (10 counting blanks)).
The process invariably loops at 4 = FOUR.

ITEM 135 (Gosper):
The "C" Curve

A brilliant archeologist is photographing a strange drawing on the wall of a cave. He holds the camera upright for some shots, moves it, and turns it 90 degrees for the rest. When he sees his prints he is amazed to find one of them apparently taken with the camera turned 45 degrees. After a moment's reflection, he correctly concludes that it is merely a double exposure. What was the drawing?

Answer: It is a cousin to both the dragon and snowflake curves (and arose as a bug in a spacefilling curve). It can be constructed as follows. Start with a line segment. Replace it with the two legs of the isosceles right triangle of which it is hypotenuse. Repeat this for the two new segments, always bulging outward in the same direction. We now have four segments forming half a square, with the middle two segments collinear. Replacing these four segments with eight and then sixteen, we find the middle two segments superimposed. As the process continues, the curve crosses itself more and more often, eventually taking on the shape of a wildly curly letter C which forms the envelope of a myriad of epicyclic octagons.

A faster way to approach the same limiting curve is to substitute the curve itself for each of its 2^{2^n} segments, starting with a 90 degree "<".

Yet another way to construct it is to iteratively connect opposite ends of two copies at a 90 degree angle. (The archeologist did this with his double exposure.) If we reduce the scale by $\sqrt{2}$ each time, the distance between the endpoints stays the same. If the initial line segment is red and there is some other blue shape elsewhere in the picture, the iteration will simultaneously proliferate and shrink the blue shapes, until they are all piled up along the red "C". Thus, no matter what you start with, you eventually get something that looks like the "C" curve.

There are other pictures besides the C curve which are preserved by this process, but they are of infinite size. You can get them by starting with anything and running the iteration backwards as well as forwards, superimposing all the results. A backward step consists of rotating the two copies in directions opposite those in the forward step and stretching by $\sqrt{2}$ instead of shrinking. David Silver has sketched an arrangement of mirrors which might do this to a real scene.

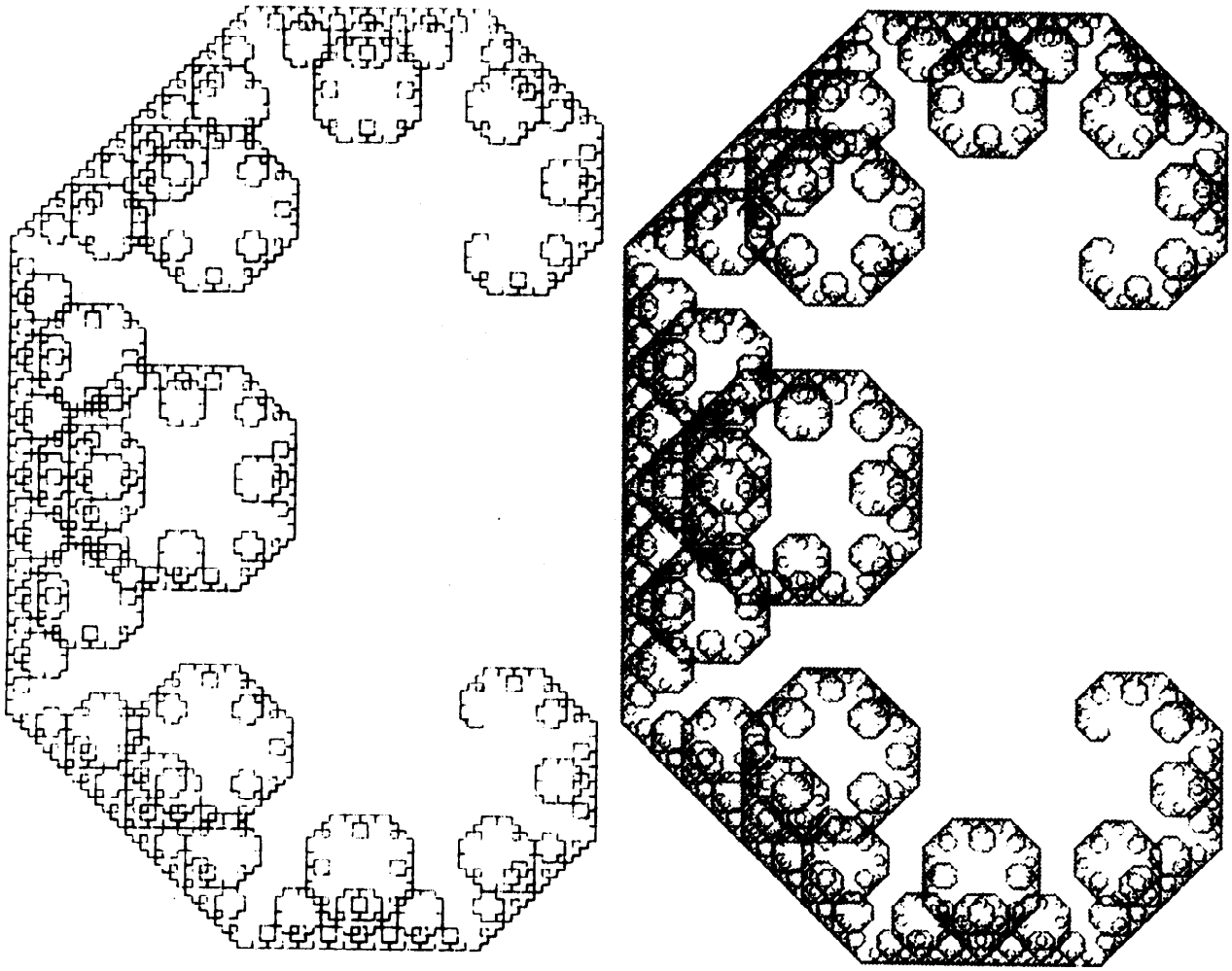

Figure 8. Two orders of the "C" curve.

ITEM 136: GAUSSIAN INTEGERS (For use by next item.)
Reference: Hardy and Wright, Theory of Numbers. The Gaussian integers are x+iy where x and y are integers. Unique factorization holds, except for powers of i, and the Gaussian primes are (1) a+bi if a^2+b^2 is prime and (2) integer primes that = 3 mod 4. If $N(x+iy) = x^2+y^2$, then $N(uv) = N(u)N(v)$. If p is prime and not= 3 mod 4, then $p = a^2+b^2$ has exactly one solution. If n = 3 mod 4, then $n = a^2+b^2$ has no solution.
To factor x+iy into Gaussian primes, first factor N(x+iy).
(A) If 2 divides N(x+iy), then 1+i and 1-i divide x+iy. Either factor may be used since i(i-1) = i+1.
(B) If p=3 mod 4 divides N(x+iy), then p divides x+iy.
(C) If p=1 mod 4 divides N(x+iy) and $p = a^2+b^2$, then a+ib or b+ia = i(a-ib) divides x+iy. If both do, then p divides x+iy.

ITEM 137 (Salamin): GENERATION OF ARCTANGENT FORMULAS FOR π
n1 atan(y1/x1) + n2 atan(y2/x2) + ...
= n1 arg(x1+iy1) + n2 arg(x2+iy2) + ...
If each x+iy is factored and the n's chosen so all prime factors except 1+i cancel out, the right hand side is a multiple K of π/4. Some care is needed because of the multiple valuedness of arg. Then, if K = 0, we get an arctangent identity, otherwise we get a π formula. In the special case of atan(1/x), factorization of x+i is needed. Then case (B) above can't occur, and in case (C), a+ib and a-ib can't both divide x+i.
Example:

$$8^2+1 = 13 \times 5$$
$$18^2+1 = 13 \times 5^2$$
$$57^2+1 = 13 \times 5^3 \times 2$$

From this we get the factorization

$$8+i = (3+2i)\ (2-i)$$
$$18+i = (3-2i)\ (2-i)^2\ i$$
$$57+i = (3-2i)\ (2+i)^3\ (1-i)$$

Since we only care about the phase, multiplication by a positive real number may be ignored below.

$$(8+i)^a\ (18+i)^b\ (57+i)^c = (3+2i)^{a-b-c}\ (2+i)^{-a-2b+3c}\ (1-i)^c\ i^b$$

We require a-b-c = 0 and -a-2b+3c = 0, which has the minimal non-trivial solution a = 5, b = 2, c = 3. Then we have

$$(8+i)^5\ (18+i)^2\ (57+i)^3 = (1-i)^3\ i^2$$

Taking the phase of both sides, we get

$$5\ \text{atan}(1/8) + 2\ \text{atan}(1/18) + 3\ \text{atan}(1/57) = \pi/4.$$

π formulas:

$\pi/4 = \arctan(1/2) + \arctan(1/3)$
$\pi/4 = 2\arctan(1/3) + \arctan(1/7)$
$\pi/4 = 4\arctan(1/5) - \arctan(1/239)$
$\pi/4 = 2\arctan(1/4) + \arctan(1/7) + 2\arctan(1/13)$
$\pi/4 = 3\arctan(1/4) + \arctan(1/13) - \arctan(1/38)$
$\pi/4 = 4\arctan(1/5) - \arctan(1/70) + \arctan(1/99)$
$\pi/4 = 5\arctan(1/8) + 2\arctan(1/18) + 3\arctan(1/57)$
$\pi/2 = 7\arctan(1/4) - 5\arctan(1/32) + 3\arctan(1/132) - 4\arctan(1/378)$

This last angle has been measured against the International Standard Platinum-Iridium Right Angle and certified adequate for any purpose of the U. S. Government, when used in conjunction with a conscientiously applied program of oral hygiene and regular professional care.

$\pi/4 = 7\arctan(1/9) + \arctan(1/32) - 2\arctan(1/132) - 2\arctan(1/378)$
$\pi/4 = 7\arctan(1/13) + 8\arctan(1/32) - 2\arctan(1/132) + 5\arctan(1/378)$

There are many easily found arctangent identities. Some are:

$\arctan(1/31) = \arctan(1/57) + \arctan(1/68)$
$= \arctan(1/44) + \arctan(1/105)$
$\arctan(1/50) = \arctan(1/91) + \arctan(1/111)$
$\arctan(1/239) = \arctan(1/70) - \arctan(1/99)$
$= \arctan(1/408) + \arctan(1/577)$
$\arctan(1/2441) = \arctan(1/1164) - \arctan(1/2225)$
$= \arctan(1/4774) + \arctan(1/4995)$
$\arctan(1/32) = \arctan(1/38) + \arctan(1/132) - \arctan(1/378)$
$= 2\arctan(1/73) + \arctan(1/239) - \arctan(1/2943)$

Infinite sets of arctangent identities:

$$\arctan(1/n) - \arctan(1/(n+1)) = \arctan(1/(n^2+n+1))$$

Let $x_0 = 1$, $y_0 = 0$, $x_n = x_{n-1} + 2y_{n-1}$, $y_n = x_{n-1} + y_{n-1}$.

x_n/y_n are the continued fraction approximants to $\sqrt{2}$.

$$\arctan(1/y_{2n}) + \arctan(1/x_{2n}) = \arctan(1/x_{2n-1})$$

$$\arctan(1/y_{2n}) - \arctan(1/x_{2n}) = \arctan(1/x_{2n+1})$$

ITEM 138 (Gosper):

$\pi = 28\arctan(3/79) + 20\arctan(29/278)$
$\pi = 48\arctan(3/79) + 20\arctan(1457/22049)$

Which isn't too interesting except that it means that $(79+3i)^{48}(22049+1457i)^{20}$ is a negative real number.

ITEM 139 (Ramanujan):

$$4/\pi = \sum_{N=0}^{\infty} \frac{(-1)^N (1123 + 21460\,N)\,(1*3*5*\ldots*(2N-1))\,(1*3*5*\ldots*(4N-1))}{(882)^{2N+1}\,(32)^N\,(N!)^3}$$

This series gives about 6 decimal places accuracy per term.

$$\frac{1}{\sqrt{8}\pi} = \sum_{N=0}^{\infty} \frac{(1103 + 26390\,N)\,(1*3*5*\ldots*(2N-1))\,(1*3*5*\ldots*(4N-1))}{(99)^{4N+2}\,(32)^N\,(N!)^3}$$

This series gives about 8 decimal places accuracy per term. For other π series, see Ramanujan's paper "Modular Equations and Approximations to Pi" in Quarterly Journal of Pure and Applied Mathematics, vol. 45, page 350 (1914). For more goodies, see "Collected Papers of Srinivasa Ramanujan", Cambridge U. Press (1927).

ITEM 140:
Counting the initial 3 as the zeroth, the 431st denominator in the regular continued fraction for π is 20776. (Choong, Daykin & Rathbone, Math. of Computation 25 (1971) p. 387).
(Gosper) In the first 26491 terms of π, the only other 5 digit terms are the 15543rd =19055 and the 23398th =19308. (Computed from 35570 terms of the (nonregular) fraction for 4 arctan 1.)

ITEM 141:
The fraction part of $10^{760}\pi$ begins: .49999998...

ITEM 142 (Salamin):
Some super-fast convergents to π if one already has a super-fast computation of trig functions.

X approx π: $X \leftarrow X + \sin X$, $\varepsilon \leftarrow \varepsilon^3/6$
$X \leftarrow X - \tan X$, $\varepsilon \leftarrow -\varepsilon^3/3$

X approx $\pi/2$: $X \leftarrow X + \cos X$, $\varepsilon \leftarrow \varepsilon^3/6$
$X \leftarrow X + \cot X$, $\varepsilon \leftarrow -\varepsilon^3/3$

ITEM 143 (Salamin):
Computation of elliptic integrals, log, and π.

REFERENCES:
Whittaker & Watson, Modern Analysis, chap. 22
Abramowitz & Stegun, Handbook of Mathematical Functions, sect. 17.3, 17.6

1. ELLIPTIC INTEGRALS

Define elliptic integrals:

$$K(m) = \int_0^1 1/\sqrt{(1 - t^2)\ (1 - m\ t^2)}\ dt$$

$$K'(m) = K(1 - m)\ .$$

If A_0 and B_0 are given, and

A_{n+1} = arithmetic mean of A_n and B_n

B_{n+1} = geometric mean of A_n and B_n

then define

$$AGM(A_0, B_0) = \lim A_n = \lim B_n$$

This is called the arithmetic-geometric mean.
Quadratic convergence rate:

$$A_{n+1} - B_{n+1} = (A_n - B_n)^2 / 8A_{n+1}$$

It is known that

$$K'(x^2)\ AGM(1, x) = \pi/2 \qquad \text{[see A\&S]}.$$

This gives a super fast method of computing elliptic integrals. It is easy to compute AGM(1, x) for x in the complex plane cut from zero to infinity along the negative real axis. So K'(m) can be computed for $-2\pi < \arg(m) < 2\pi$, which covers the complex m-plane twice. Handling the phase when taking square roots will permit exploration of more of the Riemann surface.

For small m,

$$K(m) = (\pi/2)\ (1 + m/4 + O(m^2))$$

$$e^{-\pi(K'(m)/K(m))} = (m/16)\ (1 + m/2 + O(m^2))$$

Solve for K'(m) and let $m = 16/x^2$,

$$K'(16/x^2) = \log x + (4/x^2)\ (\log x - 1) + O(\log x/x^4).$$

For x sufficiently large,

$$\log x = K'(16/x^2) = \pi/(2\ \mathrm{AGM}(1, 4/x)).$$

Requiring a given number of bits accuracy in log x is equivalent to requiring

$$|(K'(16/x^2) - \log x)/\log x| < \varepsilon$$

this becomes

$$|(4/x^2)\ (1 - 1/\log x)| < |4/x^2| < \varepsilon$$

$$|x| > 2/\sqrt{\varepsilon}.$$

x can be complex. If |x| is not too close to 1, x can be brought into range by reciprocating or repeated squaring.

3. PI

Let $x = e^n$, then

$$\pi = 2n\ \mathrm{AGM}(1, 4\ e^{-n}).$$

Suppose ε = 10 to the minus a billion.
Then the above equation for π is valid when n > 1.15 billion.
e^{-n} is calculated by starting with 1/e and squaring k times.
Thus $n = 2^k$. 2^{30} = 1.07 billion and 2^{31} = 2.15 billion, so k = 30 gives 0.93 billion places accuracy and k = 31 gives 1.86 billion places.

ITEM 144 (Schroeppel):

In the above, instead of $x = e^n$, use $x = 2^n$ and $x = e^{*2^n}$. Then simultaneous equations can be solved to give both π and log 2. This avoids having to square e, but requires two AGM's, and therefore takes longer.

PROGRAMMING HACKS

WARNING: Numbers in this section are octal
(and occasionally binary) unless followed by a decimal point.
105=69.. (And 105.=69 hexadecimal.)

ITEM 145 (Gosper):
Proving that short programs are neither trivial nor
exhausted yet, there is the following:

```
0/      TLCA 1,1(1)
1/      see below
2/      ROT 1,9
3/      JRST 0
```

This is a display hack (that is, it makes pretty patterns) with
the low 9 bits = Y and the 9 next higher = X; also, it makes
interesting, related noises with a stereo amplifier hooked to
the X and Y signals. Recommended variations include:

```
      CHANGE:          GOOD INITIAL CONTENTS OF 1:
        none             377767,,377767; 757777,,757757; etc.
        TLC 1,2(1)       373777,,0; 300000,,0
        TLC 1,3(1)       -2,,-2; -5,,-1; -6,,-1
        ROT 1,1          7,,7; A0000B,,A0000B
        ROTC 1,11        ;Can't use TLCA over data.
        AOJA 1,0
```

ITEM 146:
Another simple display program: ("munching squares")
It is thought that this was discovered by
Jackson Wright on the RLE PDP-1 circa 1962.

```
        DATAI 2
        ADDB 1,2
        ROTC 2,-22
        XOR 1,2
        JRST .-4
```

2=X, 3=Y. Try things like 1001002 in data switches. This also
does interesting things with operations other than XOR,
and rotations other than -22. (Try IOR; AND; TSC; FADR; FDV(!);
ROT -14, -9, -20, ...)

ITEM 147 (Schroeppel):
Munching squares is just views of the graph Y = X XOR T
for consecutive values of T = time.

ITEM 148 (Cohen, Beeler):
A modification to munching squares which
reveals them in frozen states through
opening and closing curtains: insert FADR 2,1 before the XOR.
Try data switches =
4000,,4 1000,,2002 2000,,4 0,,1002
(Notation: <left half>,,<right half>)
Also try the FADR after the XOR, switches = 1001,,1.

ITEM 149 (Minsky):
Here is an elegant way to draw almost circles on a point-plotting display. CIRCLE ALGORITHM:

NEW X = OLD X - ε * OLD Y
NEW Y = OLD Y + ε * NEW(!) X

This makes a very round ellipse centered at the origin with its size determined by the initial point. ε determines the angular velocity of the circulating point, and slightly affects the eccentricity. If ε is a power of 2, then we don't even need multiplication, let alone square roots, sines, and cosines! The "circle" will be perfectly stable because the points soon become periodic.

The circle algorithm was invented by mistake when I tried to save one register in a display hack! Ben Gurley had an amazing display hack using only about six or seven instructions, and it was a great wonder. But it was basically line-oriented. It occurred to me that it would be exciting to have curves, and I was trying to get a curve display hack with minimal instructions.

ITEM 150 (Schroeppel):
PROBLEM: Although the reason for the circle algorithm's stability is unclear, what is the number of distinct sets of radii? (Note: algorithm is invertible, so all points have predecessors.)

ITEM 151 (Gosper):
Separating X from Y in the above recurrence,

$$X(N+1) = (2-\varepsilon^2)*X(N) - X(N-1)$$
$$Y(N+1) = (2-\varepsilon^2)*Y(N) - Y(N-1).$$

These are just the Chebychev recurrence with cos θ (the angular increment) = $1-\varepsilon^2/2$. Thus X(N) and Y(N) are expressible in the form R cos(N θ + φ). The φ's and R for X(N) and Y(N) can be found from N=0,1. The φ's will differ by less than π/2 so that the curve is not really a circle. The algorithm is useful nevertheless, because it needs no sine or square root function, even to get started.

X(N) and Y(N) are also expressible in closed form in the algebra of ordered pairs described under linear recurrences, but they lack the remarkable numerical stability of the "simultaneous" form of the recurrence.

ITEM 152 (Salamin):
With exact arithmetic, the circle algorithm is stable iff $|\varepsilon| < 2$. In this case, all points lie on the ellipse

$$X^2 - \varepsilon X Y + Y^2 = \text{constant},$$

where the constant is determined by the initial point. This ellipse has its major axis at 45 degrees (if $\varepsilon > 0$) or 135 degrees (if $\varepsilon < 0$) and has eccentricity

$$\sqrt{\varepsilon/(1 + \varepsilon/2)}.$$

ITEM 153 (Minsky):
To portray a 3-dimensional solid on a 2-dimensional display, we can use a single circle algorithm to compute orbits for the corners to follow. The (positive or negative) radius of each orbit is determined by the distance (forward or backward) from some origin to that corner. The solid will appear to wobble rigidly about the origin, instead of simply rotating.

ITEM 154 (Gosper):
The myth that any given programming language is machine independent is easily exploded by computing the sum of powers of 2.
If the result loops with period = 1 with sign +,
        you are on a sign-magnitude machine.
If the result loops with period = 1 at -1,
        you are on a twos-complement machine.
If the result loops with period > 1, including the beginning,
        you are on a ones-complement machine.
If the result loops with period > 1, not including the beginning,
        your machine isn't binary -- the pattern should tell you
        the base.
If you run out of memory, you are on a string or Bignum system.
If arithmetic overflow is a fatal error, some fascist pig with a
        read-only mind is trying to enforce machine independence.
        But the very ability to trap overflow is machine
        dependent.
By this strategy, consider the universe, or, more precisely, algebra:
        let X = the sum of many powers of two = ...111111
        now add X to itself; X + X = ...111110
        thus, 2X = X - 1 so X = -1
        therefore algebra is run on a machine (the universe)
        which is twos-complement.

ITEM 155 (Liknaitzky):
To subtract the right half of an accumulator from the left (as in restarting an AOBJN counter): IMUL A,[377777,,1]

ITEM 156 (Mitchell):
To make an AOBJN pointer when the origin is fixed and the length is a variable in A:
        HRLOI A,-1(A)
        EQVI A,ORIGIN

ITEM 157 (Freiberg):
If instead, A is a pointer to the last word
        HRLOI A,-ORIGIN(A)
        EQVI A,ORIGIN
Slightly faster: change the HRLOIs to MOVSIs and the EQVI addresses to -ORIGIN-1. These two routines are clearly adjustable for BLKOs and other fenceposts.

ITEM 158 (Gosper, Salamin, Schroeppel):
A miniature (recursive) sine and cosine routine follows.

```
COS:    FADR A,[1.57079632679]  ;π/2
SIN:    MOVM B,A                ;argument in A
        CAMG B,[.00017]         ;≤ √3 / 2^13
        POPJ P,                 ;sin X = X, within 27. bits
        FDVRI A,(-3.0)
        PUSHJ P,SIN             ;sin -X/3
        FMPR B,B
        FSC B,2
        FADRI B,(-3.0)
        FMPRB A,B               ;sin X = 4(sin -X/3)^3-3(sin -X/3)
        POPJ P,                 ;sin in A, sin or |sin| in B
;|sin| in B occurs when angle is smaller than end test
```

Changing both -3.0's to +3.0's gives sinh:
$\sinh X = 3 \sinh X/3 + 4 (\sinh X/3)^3$.
Changing the first -3.0 to a +9.0, then inserting PUSHJ P,.+1 after PUSHJ P,SIN gains about 20% in speed and uses half the pushdown space (< 5 levels in the first 4 quadrants). PUSHJ P,.+1 is a nice way to have something happen twice.
Other useful angle multiplying formulas are
$\tanh X = (2 \tanh X/2)/(1 + (\tanh X/2)^2)$
$\tan X = (2 \tan X/2)/(1 - (\tan X/2)^2)$, if infinity is handled correctly. For cos and cosh, one can use
$\cos X = 1 - 2 (\sin X/2)^2$, $\cosh X = 1 + 2 (\sinh X/2)^2$.

In general, to compute functions like e^X, cos X, elliptic functions, etc. by iterated application of double and triple argument formulas, it is necessary to subtract out the constant in the Taylor series and transform the range reduction formula accordingly. Thus:

$F(X) = \cos(X)-1$	$F(2X) = 2F^*(F+2)$	$F(\varepsilon) = -\varepsilon^2/2$
$G(X) = e^X - 1$	$G(2X) = G^*(G+2)$	$G(\varepsilon) = \varepsilon$

This is to prevent the destruction of the information in the range-reduced argument by the addition of a quantity near 1 upon the success of the ε test. The addition of such a quantity in the actual recurrences is OK since the information is restored by the multiply. In fact, a cheap and dirty test for F(ε) sufficiently small is to see if the addition step has no effect.
People lucky enough to have a square root instruction can get natural log by iterating $X \leftarrow X/(\sqrt{1+X} + 1)$ until $1+X = 1$.
Then multiply by $2^{\text{(number of iterations)}}$. Here, a LSH or FSC would work.

ITEM 159 (Gosper, Schroeppel):
(Numbers herein are decimal.)
The correct epsilon test in such functions as the foregoing SIN are generally the largest argument for which addition of the second term has no effect on the first. In SIN, the first term is x and the second is $-x^3/6$, so the answer is roughly the x which makes the ratio of those terms $1/2^{27}$; so $x = \sqrt{3} / 2^{13}$. But this is not exact, since the precise cutoff is where the neglected term is the power of 2 whose 1 bit coincides with the first neglected (28th) bit of the fraction. Thus, $x^3/6 = 1/2^{27} * 1/2^{13}$, so $x = \sqrt[3]{3} / 2^{13}$.

ITEM 160 (Gosper):
Here is a way to get log base 2. A and B are consecutive. Call by PUSHJ P,LOG2 with a floating point argument in A.

```
LOG2:   LSHC A,-33
        MOVSI C,-201(A)
        TLC C,211000        ;Speciner's bum
        MOVEI A,200         ;exponent and sign sentinel
LOGL:   LSH B,-9
REPEAT 7, FMPR B,B          ;moby flunderflo
        LSH B,2
        LSHC A,7
        SOJG A,LOGL         ;fails on 4th try
        LSH A,-1
        FADR A,C
        POPJ P,             ;answer in A
```

Basically, you just square seven times and use the low seven bits of the exponent as the next seven bits of the log.

ITEM 161 (Gosper):
To swap the contents of two locations in memory:

```
        EXCH A,LOC1
        EXCH A,LOC2
        EXCH A,LOC1
```

Note: LOC1 must not equal LOC2! If this can happen, use MOVE-EXCH-MOVEM, clobbering A.

ITEM 162 (Gosper):
To swap two bits in an accumulator:

```
        TRCE A,BITS
        TRCE A,BITS
        TRCE A,BITS
```

Note (Nelson): last TRCE never skips, and used to be a TRC, but TRCE is less forgettable. Also, use TLCE or TDCE if the bits are not in the right half.

ITEM 163 (Sussman):
To exchange two variables in LISP without using a third variable:

```
        (SETQ X (PROG2 0 Y (SETQ Y X)))
```

ITEM 164 (Samson):
To take MAX in A of two byte pointers
(where A and B are consecutive accumulators):

```
        ROTC A,6
        CAMG A,B
        EXCH A,B
        ROTC A,-6
```

ITEM 165 (Freiberg):
A byte pointer can be converted to a character address < 2^{18} by MULI A,<# bytes/word> followed by SUBI B,1-<# b/w>(A).
To get full word character address, use SUB into a magic table.

ITEM 166 (Gosper, Liknaitzky):
To rotate three consecutive accumulators N < 37. places:

```
        ROTC A,N
        ROT B,-N
        ROTC B,N
```

Thus M AC's can be ROTC'ed in 2M-3 instructions.
(Stallman): For 73. > N > 35.:

```
        ROTC A,N-36.
        EXCH A,C
        ROT B,36.-N
        ROTC A,N-72.
```

ITEM 167 (Gosper, Freiberg):

```
;B gets 7 bit character in A with even parity
        IMUL A,[2010040201]     ;5 adjacent copies
        AND A,[21042104377]     ;every 4th bit of left 4 copies + right copy
        IDIVI A,17←7            ;casting out 15.'s in hexadecimal shifted 7

;odd parity on 7 bits (Schroeppel)
        IMUL A,[10040201]       ;4 adjacent copies
        IOR A,[7555555400]      ;leaves every 3rd bit+offset+right copy
        IDIVI A,9←7             ;powers of 2^3 are ±1 mod 9
;changing 7555555400 to 27555555400 gives even parity

;if A is a 9 bit quantity, B gets number of 1's (Schroeppel)
        IMUL A,[1001001001]     ;4 copies
        AND A,[42104210421]     ;every 4th bit
        IDIVI A,17              ;casting out 15.'s in hexadecimal

;if A is 6 bit quantity, B gets 6 bits reversed (Schroeppel)
        IMUL A,[2020202]        ;4 copies shifted
        AND A,[104422010]       ;where bits coincide with reverse repeated base 2^8
        IDIVI A,377             ;casting out 2^8-1's

;reverse 7 bits (Schroeppel)
        IMUL A,[10004002001]    ;4 copies sep by 000's base 2 (may set arith. o'flow)
        AND A,[210210210010]    ;where bits coincide with reverse repeated base 2^8
        IDIVI A,377             ;casting out 377's

;reverse 8 bits (Schroeppel)
        MUL A,[100200401002]    ;5 copies in A and B
        AND B,[20420420020]     ;where bits coincide with reverse repeated base 2^10
        ANDI A,41               ;"
        DIVI A,1777             ;casting out 2^10-1's
```

ITEM 168 (PDP-1 hackers):

```
foo,    lat         /DATAI switches
        adm a       /ADDB
        and (707070
        adm b
        iot 14      /output AC sign bit to a music flip-flop
        jmp foo
```

Makes startling chords, arpeggios, and slides, with just the sign of the AC. This translates to the PDP-6 (roughly) as:

```
FOO:    DATAI 2
        ADDB 1,2
        AND 2,[707070707070]     ;or 171717171717, 363636363636, 454545454545, ...
        ADDB 2,3
        LDB 0,[360600,,2]
        JRST FOO
```

Listen to the square waves from the low bits of 0.

ITEM 169 (in order of one-ups-manship: Gosper, Mann, Lenard, [Root and Mann]):
To count the ones in a PDP-6/10 word:

```
        LDB B,[014300,,A]        ;or MOVE B,A then LSH B,-1
        AND B,[333333,,333333]
        SUB A,B
        LSH B,-1
        AND B,[333333,,333333]
        SUBB A,B    ;each octal digit is replaced by number of 1's in it
        LSH B,-3
        ADD A,B
        AND A,[070707,,070707]
        IDIVI A,77       ;casting out 63.'s
```

These ten instructions, with constants extended, would work on word lengths up to 62.; eleven suffice up to 254..

ITEM 170 (Jensen):
Useful strings of non-digits and zeros can arise when carefully chosen negative numbers are fed to unsuspecting decimal print routines. Different sets arise from different methods of character-to-digit conversion.
Example (Gosper):

```
DPT:    IDIVI F,12
        HRLM G,(P)          ;tuck remainder on pushdown list
        SKIPE F
        PUSHJ P,DPT
        LDB G,[220600,,(P)]    ;retrieve low 6 bits of remainder
        TRCE G,"0           ;convert digit to character
        SETOM CCT           ;that was no digit!

TYO:    .IOT TYOCHN,G       ;or DATAO or IDPB ...
        AOS G,CCT
        POPJ P,
```

This is the standard recursive decimal print of the positive number in F, but with a LDB instead of a HLRZ. It falls into the typeout routine which returns in G the number of characters since the last carriage return. When called with a -36., DPT types carriage return, line feed, and resets CCT, the character position counter.

ITEM 171 (Gosper):
Since integer division can never produce a larger quotient than dividend, doubling the dividend and divisor beforehand will distinguish division by zero from division by 1 or anything else, in situations where division by zero does nothing.

ITEM 172 (Gosper):
The fundamental operation for building list structure, called CONS, is defined to: find a free cell in memory, store the argument in it, remove it from the set of free cells, return a pointer to it, and call the garbage collector when the set is empty. This can be done in two instructions:

```
CONS:   EXCH A,[EXCH A,[...[PUSHJ P,GC]...]]
        EXCH A,CONS
```

Of course, the address-linked chain of EXCH's indicated by the nested brackets is concocted by the garbage collector. This method has the additional advantage of not constraining an accumulator for the free storage pointer.

```
UNCONS: HRLI A,(EXCH A,)
        EXCH A,CONS
        EXCH A,@CONS
```

Returns cell addressed by A to free storage list; returns former cell contents in A.

ITEM 173 (Gosper):
The incantation to fix a floating number is usually

```
        MULI A,400      ;exponent to A, fraction to A+1
        TSC A,A ;1's complement magnitude of excess 200 exponent
        ASH A+1,-200-27.-8(A)    ;answer in A+1
```

If number is known positive, you can omit the TSC.
On the PDP-10

```
        UFA A,[±233000,,]       ;not in PDP-6 repertoire
        TLC A+1,233000  ;if those bits really bother you
```

When you know the sign of A, and $|A| < 2^{26}$, you can

```
        FAD A,[±233400,,]       ;or FADR for rounded fix!
        TLC A,233400    ;if those bits are relevant
```

where the sign of the constant must match A's.
This works on both machines and doesn't involve A+1.
On the 10, FADRI saves a cycle and a constant, and rounds.

ITEM 174 (Gosper, Nelson):
21963283741. = 243507216435 is a fixed point of the float function on the PDP-6/10, i.e., it is the only positive number whose floating point representation equals its fixed.

ITEM 175 (Gosper):
To get the next higher number (in A) with the same number of 1 bits: (A, B, C, D do not have to be consecutive)

```
        MOVE B,A
        MOVN C,B
        AND C,B
        ADD A,C
        MOVE D,A
        XOR D,B
        LSH D,-2
        IDIVM D,C
        IOR A,C
```

ITEM 176 (Gosper):
The "banana phenomenon" was encountered when processing a character string by taking the last 3 letters typed out, searching for a random occurrence of that sequence in the text, taking the letter following that occurrence, typing it out, and iterating. This ensures that every 4-letter string output occurs in the original. The program typed BANANANANANANANA....
We note an ambiguity in the phrase, "the Nth occurrence of." In one sense, there are five 00's in 0000000000; in another, there are nine. The editing program TECO finds five. Thus it finds only the first ANA in BANANA, and is thus obligated to type N next. By Murphy's Law, there is but one NAN, thus forcing A, and thus a loop. An option to find overlapped instances would be useful, although it would require backing up N-1 characters before seeking the next N character string.

ITEM 177 (Gosper): DRAWING CURVES INCREMENTALLY

Certain plotters and displays are constrained to approximate curves by a sequence of king-moves between points on a lattice.

Many curves and contours are definable by F(X,Y) = 0 with F changing sign on opposite sides of the curve. The following algorithm will draw most such curves more accurately than polygonal approximations and more easily than techniques which search for a "next" X and Y just one move away.

We observe that a good choice of lattice points is just those for which F, when evaluated on one of them, has opposite sign and smaller magnitude than on one or more of its four immediate neighbors.† This tends to choose the nearer endpoint of each graph paper line segment which the curve crosses, if near the curve F is monotone with distance from the curve.

First, divide the curve into arcs within which the curve's tangent lies within one 45 degree semiquadrant. We can show that for reasonable F, only two different increments (say north and northwest) are needed to visit the desired points.

Thus, we will be changing one coordinate (incrementing Y) every step, and we have only to check whether changing the other (decrementing X) will reduce the magnitude of F. (If F increases with Y, F(X,Y+1) > -F(X-1,Y+1) means decrement X.) F can often be manipulated so that the inequality simplifies and so that F is easily computed incrementally from X and Y.

As an example, the following computes the first semiquadrant of the circle

$$F = X^2+Y^2-R^2 = 0.$$

C0: $F \leftarrow 0$, $Y \leftarrow 0$, $X \leftarrow R$

C1: $F \leftarrow F+2Y+1$, $Y \leftarrow Y+1$

C2: if† $F \geq X$, $F \leftarrow F-2X+1$, $X \leftarrow X-1$

C3: if $Y < X-1$, go to C1

C4: (Link to next arc) if $Y = X-1$, $Y \leftarrow Y+1$, $X \leftarrow X-1$

This can be bummed by maintaining $Z = 2Y+1$ instead of Y. Symmetry may be used to compute all eight semiquadrants at once, or the loop may be closed at C2 and C3 with two PUSHJ's to provide the palindrome of decisions for the first quadrant. There is an expression for the number of steps per quadrant, but it has a three-way conditional dependent upon the midpoint geometry. Knowing this value, however, we can replace C3 and C4 with a simple loop count and an odd-even test for C4.

The loop must be top-tested (C3 before C1) if the "circle" $R = 1$, with four diagonal segments, is possible.

All this suggests that displays might be designed with an increment mode which accepts bit strings along with declarations of the form: "0 means north, 1 means northwest". 1100 (or 0011) will not occur with a curve of limited curvature; thus, it could be used as an escape code, but this would be an annoying restriction.

See the following illustration of circles drawn this way.

† In case of a tie, i.e., F has equal magnitudes with opposite signs on adjacent points, do not choose both points but rather have some arbitrary yet consistent preference for, say, the outer one. The problem can't arise for C2 in the example because the inequality $F \geq X$ is really $F > -(F-2X+1)$ or $F > X-.5$.

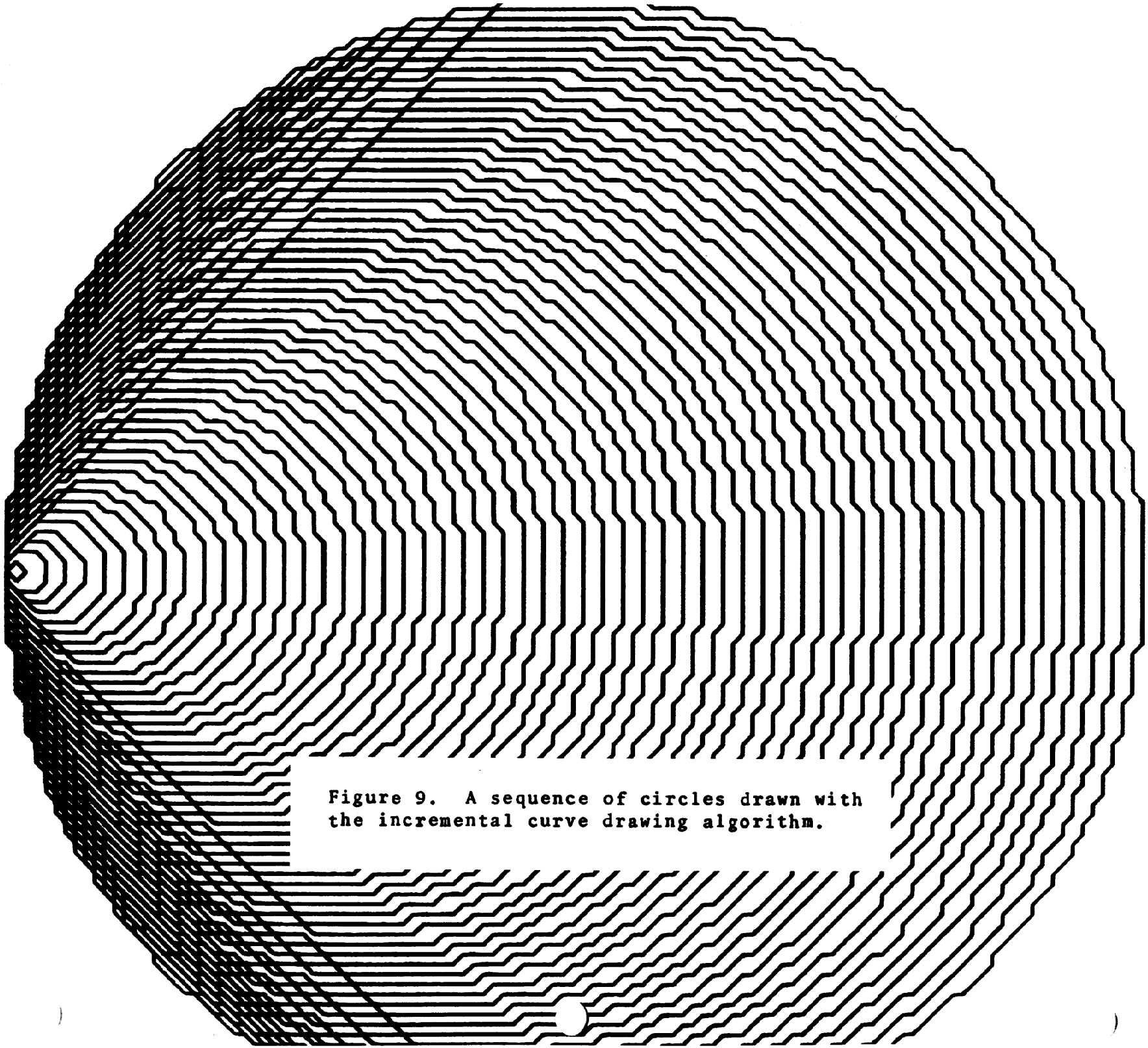

Figure 9. A sequence of circles drawn with the incremental curve drawing algorithm.

ITEM 178 (Schroeppel, Salamin):
Suppose Y satisfies a differential equation of the form
$P(X)Y(\text{Nth derivative}) + \ldots\ldots + Q(X) = R(X)$
where P, ... Q, and R are polynomials in X
(for example, Bessel's equation, $X^2Y''+XY'+(X^2-N^2)Y = 0$)
and A is an algebraic number. Then Y(A) can be evaluated to N places in time proportional to $N(\ln N)^3$.
Further, e^X and ln X or any elementary function can be evaluated to N places in $N(\ln N)^2$ for X a real number. If F(X) can be evaluated in such time, so can the inverse of F(X) (by Newton's method), and the first derivative of F(X). Also, $\zeta(3)$ and γ can be done in $N(\ln N)^3$.

ITEM 179 (Gosper):
A program which searches a character string for a given substring can always be written by iterating the sequence fetch-compare-transfer (ILDB-CAIE-JRST on the PDP6/10) once for each character in the sought string. The destinations of the transfers (address fields of the JRST's) must, however, be computed as functions of the sought string.
Let

```
0 1 2 3 4
  S A S S Y
  0 1 0 2 2
```

stand for the program

```
T0:     ILDB C,A        ;C gets next char from pointer in A
T1:     CAIE C,"S       ;skip if it's an S
        JRST T0         ;loop back on failure
        ILDB C,A        ;next
T2:     CAIE C,"A       ;skip if A
        JRST T1         ;could be an S
        ILDB C,A
T3:     CAIE C,"S
        JRST T0         ;S, A, non S, so start over
        ILDB C,A        ;next
T4:     CAIE C,"S
        JRST T2         ;could be SAS.ASSY
        ILDB C,A
        CAIE C,"Y
        JRST T2         ;could be SASS.ASSY
;found SASSY
```

In other words, a number > 0 in the top row is a location in the program where the corresponding letter of the middle row is compared with a character of the input string. If it differs, the number in the bottom row indicates the location where comparison is to resume. If it matches, the next character of the middle row is compared with the next character of the input string.

Let J be a number in the top row and K be the number below J, so that TK is the address field of the Jth JRST. For each J = 1, 2, ... we compute K(J) as follows:
K(1) = 0. Let P be a counter, initially 0.
For each succeeding J, increment P. If the Pth letter = the Jth, K(J) = K(P). Otherwise, K(J) = P, and P is reset to 0. (P(J) is the largest number such that the first P characters match the last P characters in the first J characters of the sought string.)

```
J=      0 1
          M I S S I S S I P P I
K(J)=     0 1 1 1 1 1 1 1 1 1 1

        0 1 2 3
          C O C A C O L A
          0 1 0 2 0 1 3 1
```

```
0 1 2 3 4 5
  I S S I S S I P P I
  0 1 1 0 1 1 0 5 1 0

0 1 2 3
  S A S S A F R A S
  0 1 0 2 1 3 1 1 0
```

To generalize this method to search for N strings at once, we produce a program of ILDB-CAIE-JRST's for each of the sought strings, omitting the initial ILDB from all but the first. We must compute the destination of the Jth JRST in the Ith program, TKM(I,J), which is the location of the Kth compare in the Mth program.

It might be reasonable to compile such an instruction sequence whenever a search is initiated, since alternative schemes usually require saving or backing up the character pointer.

ITEM 180 (Gosper):
A problem which may arise in machine processing of visual information is the identification of corners on a noisy boundary of a polygon. Assume you have a broken line. If it is a closed loop, find the vertex furthest from the centroid (or any place). Open the loop by making this place both endpoints and calling it a corner. We define the corner of a broken line segment to be the point the sum of whose distances from the endpoints is maximal. This will divide the segment in two, allowing us to proceed recursively, until our corner isn't much cornerier than the others along the line.

The perpendicular distance which the vector C lies from the line connecting vectors A and B is just

$$\frac{(C - A) \times (B - A)}{2\,|A - B|},$$

but maximizing this can lose on very pointy V's.
The distance sum hack can lose on very squashed Z's.

****
HARDWARE
****

ITEM 181 (Gosper):
A bug you might try to avoid when designing floating point hardware, relating to excess-200, 1's complement exponent, 2's complement fraction convention:

1) An advantage is that negation and numerical comparison can be accomplished with the same instructions for both fixed and floating point numbers.

2) A disadvantage is that the termination of the normalization process is ambiguous. Normally, when the sign bit unequals the highest bit of fraction, the number is normalized. A special case arises with negated powers of two. (That is, $-(2^n)$, not $(2)^{-n}$.) Then the fraction is 400,,0 and the sign is - also.

This means it is necessary to check whether shifting left one more bit will bring in a one:
if it brings in a zero, you will over-normalize
if it brings in a one, you should do it
If you should but don't, rounding will un-normalize, and when you then re-normalize, the normalizing amount will be doubled, so you will be off by 2 smidgens (that is, the next to low order bit). Note that rounding can over-normalize as well as un-normalize, so you can't just stop normalization after rounding.

You might check this in your PDP-6/10. For example, combine 201400,,0+δ with minus 200777,,777777+2δ. For $0 \leq \delta \leq 7777$, the correct FMP result is minus 200777,,777776, and the correct FMPR result is minus 200777,,777777.

Over-normalized negative powers of 2 work in compares and most floating arithmetic. They lose with MOVN and as dividends. Unnormalized floating operands win completely on the PDP-10, except as divisors and dividends, the latter suffering truncation error.

ITEM 182 (Roe): VOLTAGE REGULATORS
Fairchild is now supplying positive voltage regulators costing about 2 dollars in lots of 1 (for example, the uA7805 for +5 volts).

ITEM 183 (Roe): CURRENT MIRRORS
The CA3083 (and CA3084) transistor arrays can be used to make neat current mirrors. (A current mirror supplies a current on one wire equal to that drawn from a second wire.)

ITEM 184 (Roe): ONE-SHOT
A dual MOS D-type flip-flop (such as the CD4013AE) can be used to make a one-shot as follows:

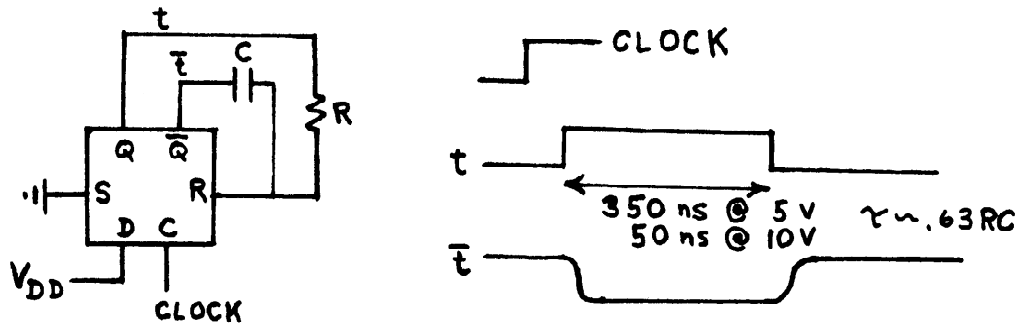

ITEM 185 (Roe): OSCILLATORS
Evryone has their own favorite oscillator circuits; here are some we like.
I crystal, overtone, transistor
II crystal, fundamental, transistor (drives at least 1 TTL load)
III crystal, fundamental, CMOS, low frequency (drives 1 TTL load; at 5.4 volts and no load, draws 330 microamperes; with a 165 KHz, 32 pf crystal, varies about 10 Hz per volt of Vcc)
IV crystal, fundamental, IC (a favorite of Nelson's, but be careful and lucky or it may oscillate at a frequency determined by the crystal holder capacitance and not by the crystal; note similarity to non-crystal oscillator V)
V not crystal controlled; for comparison with IV
VI The following blocking oscillator is quite uncritical of component values, with the exception that the turns ratio be such that -Vb (see graph) not exceed BVebo (about 5 volts for silicon transistors).

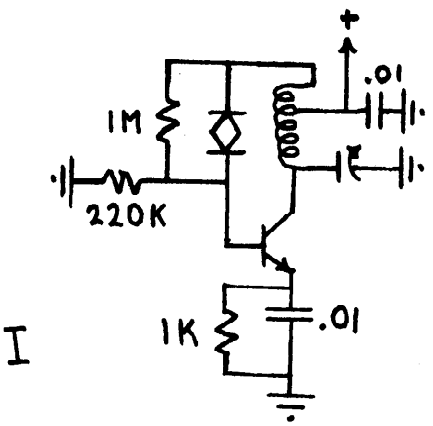

I

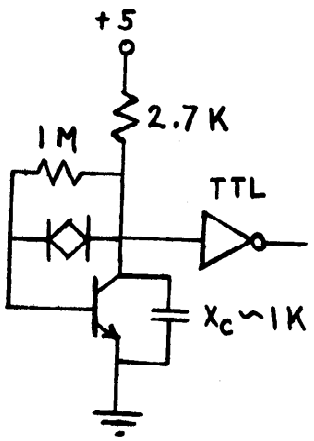

II

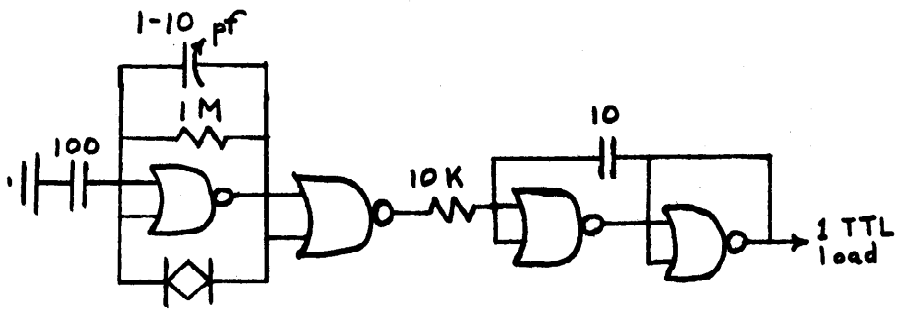

III

$\frac{1}{4}$ CD4001AE, etc.

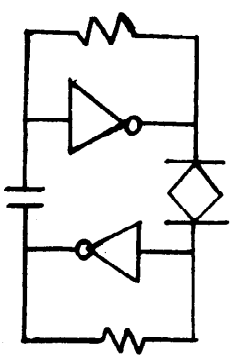

IV

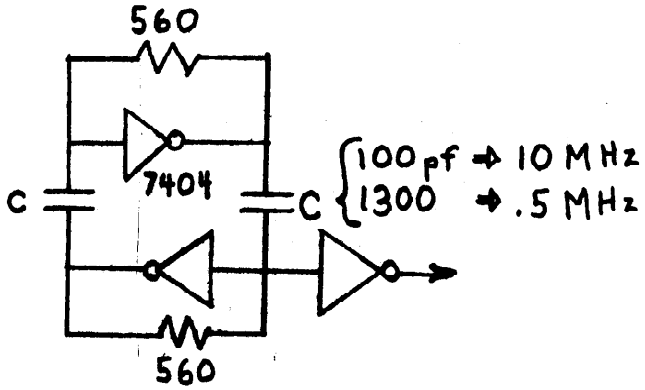

V

VI

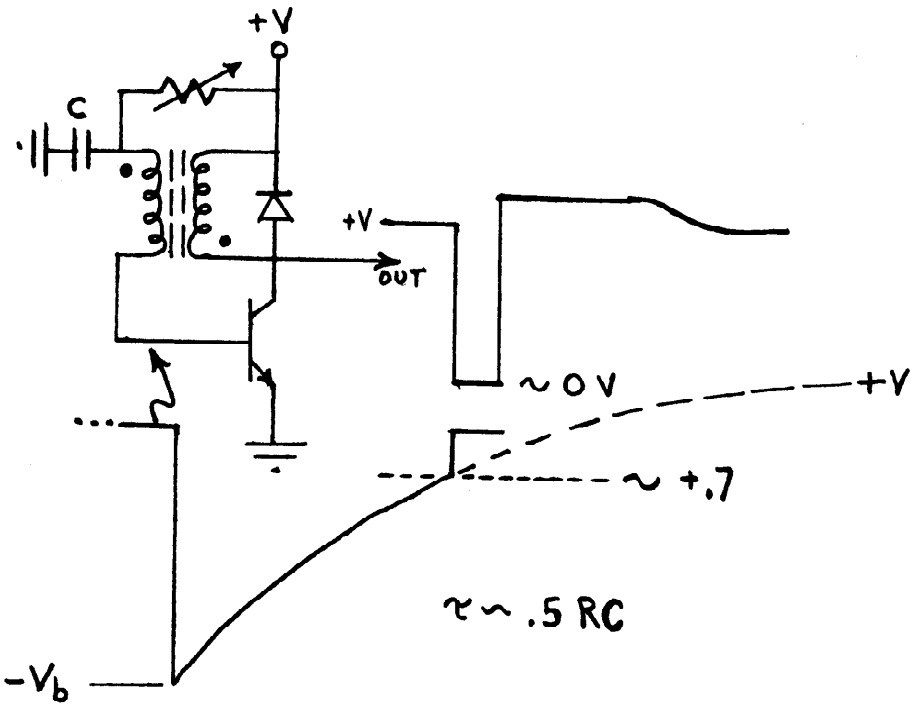

ITEM 186 (Roe): FM RADIO LINK
In work on education at our lab, we built a motorized "turtle" controlled by computer commands in the child-oriented language "Logo." The following is a transmitter designed as a radio link between the computer and turtle. Input (modulation) is either 0 or +12 volts; output is about 88MHz. Use a commercial FM tuner as receiver. Note: this transmitter is ILLEGAL no matter what; part 15 low power rule only allows if duty is less than about 1 second per 15 minutes. Don't worry about it unless you interfere with broadcast stations.

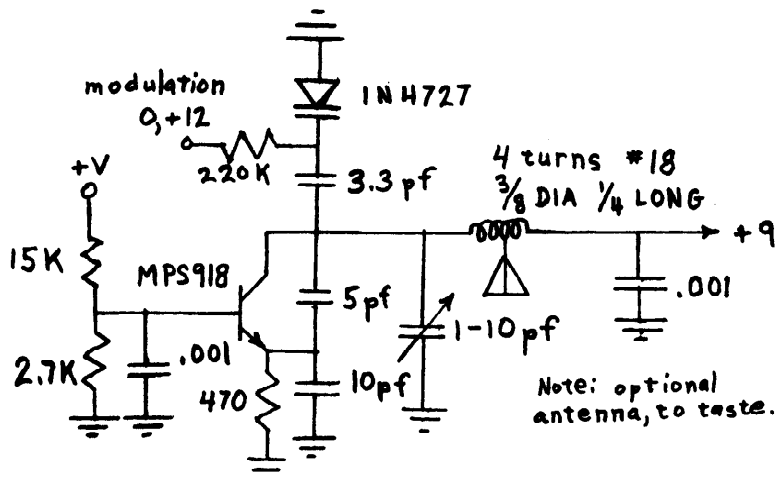

When the chess program written at our lab is playing in a chess tournament, a human attendant at the tournament moves the pieces, punches the clock, and communicates with the program via a portable terminal coupled to a telephone line. It is desirable that the program know when its chess clock is running, even though the attendant may not notice immediately that the opponent has made his move and punched the clock. Therefore we built a clock holder with a microswitch to sense the clock state. The following is a 10 mw transmitter whose input is the microswitch and whose output goes onto the phone line. It switches between two frequencies, about 320 and 470 Hz. Also shown is the receiver. Input should be at least 100 mv rms (threshold is 20 mv and overload is above 68 volts) with peak to peak signal to noise ratio greater than 4:1. As we all know, connections to phone lines are illegal unless made through a data coupler supplied by TPC (The Phone Company).

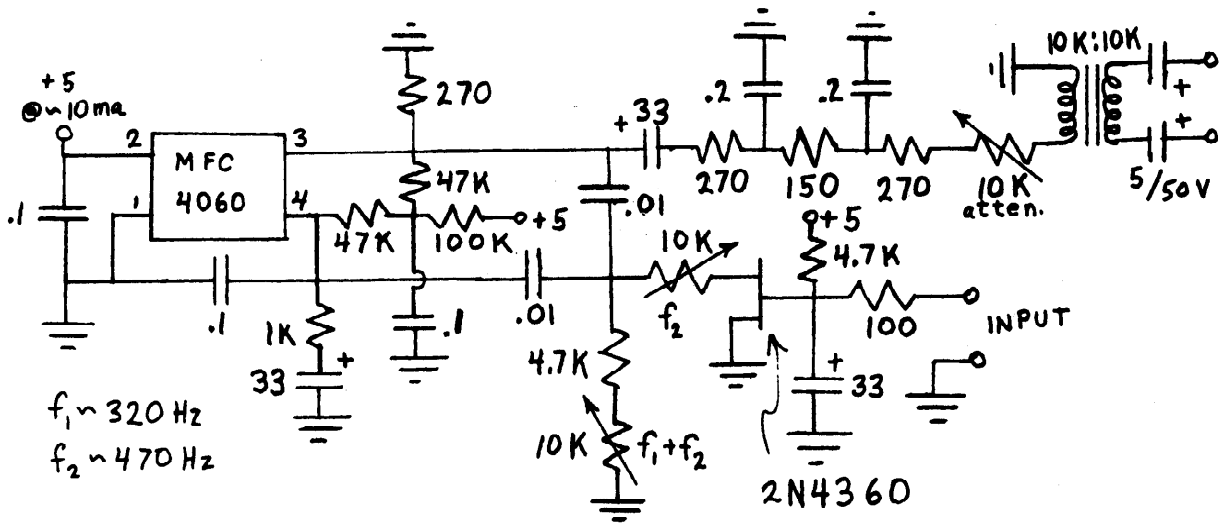

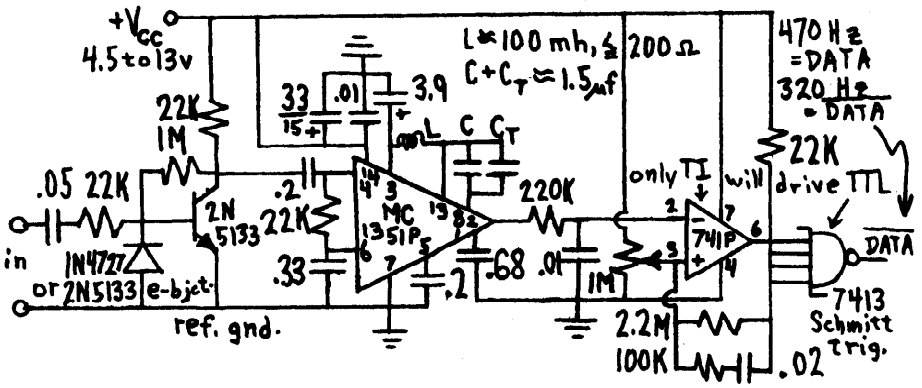

One version of the "turtle" mentioned above (see RADIO LINK) uses a DC motor to drive each of its two powered wheels. Since its path is to be as straight as possible, a triangular pulse is generated (to represent one "step" of the motor) and the motor's velocity servoed to this analog command. An additional digital command enables foreward or reverse motion. Diagram I shows a simplified velocity servoing circuit. It has the disadvantage that only half the maximum voltage available (-V to +V) can be applied across the motor at any one time. Diagram II shows the actual circuit used in the turtle.

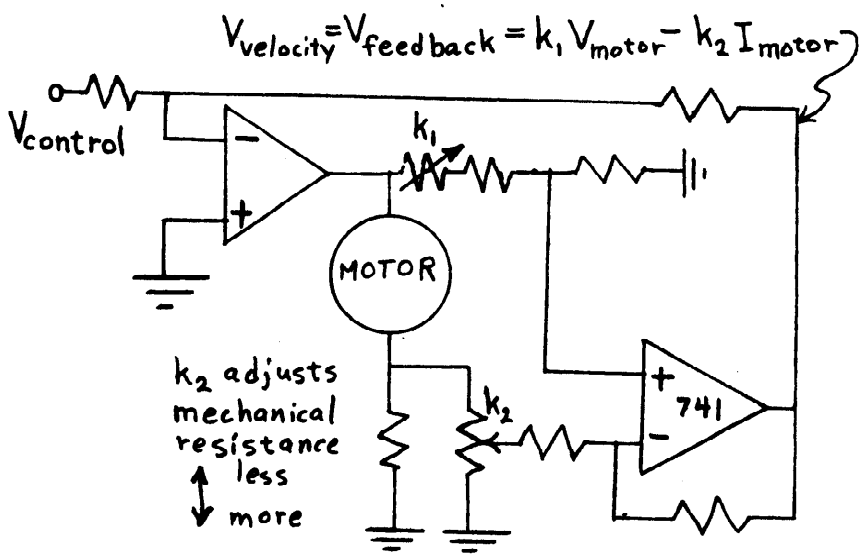

I

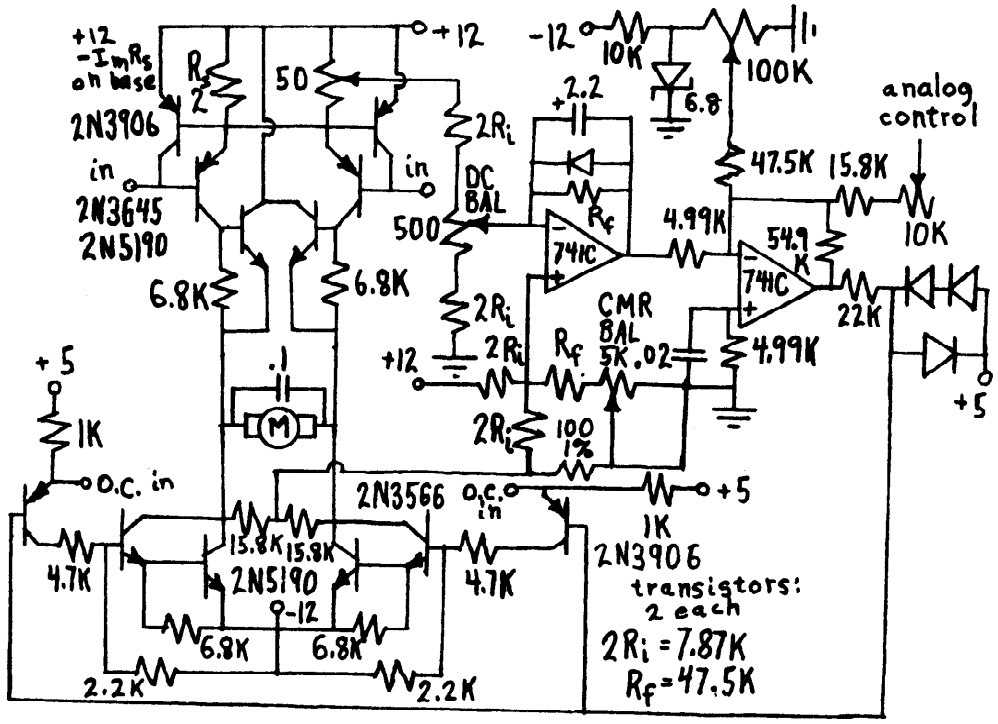

II

ITEM 189 (Roe): OPTICAL COUPLER

When two circuits are at potentials differing by a few hundred volts but wish to communicate with each other, one solution is to use an optical coupler. These employ a light-emitting device placed close to a light-sensitive device. Diodes make very fast-responding sensors, but the signal from a light-sensitive transistor is much stronger. Shown is a compromise, using a transistor as a diode, with associated cleverness to get the delay (from input to output) down from 10 microseconds to 1.

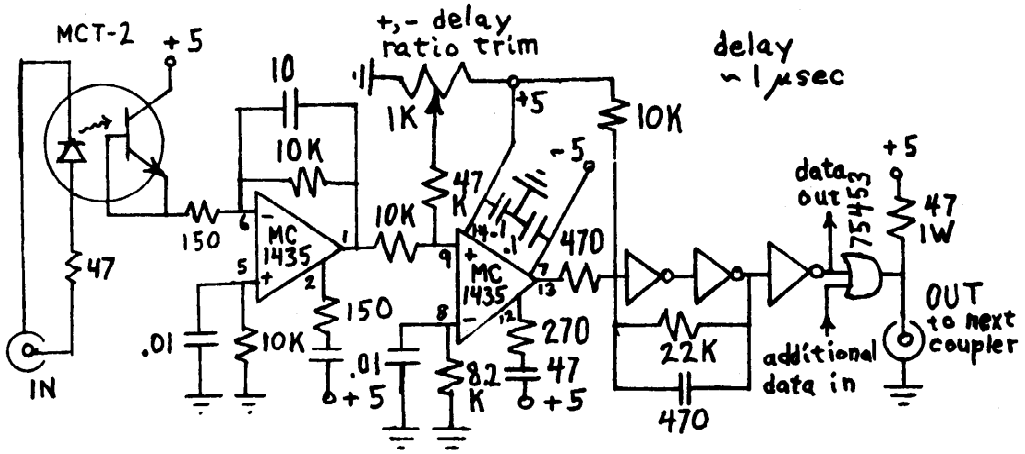

ITEM 190 (Roe): PHOTOCATHODE CURRENT OSCILLATOR

In our fourth computer-interfaced image sensing device, TVD (really a vidissector, not a TV), the photocathode sits at several thousand volts negative. Nevertheless, one wishes to sense the current it draws, since overcurrent should shut down the photocathode voltage to avoid damage to the photocathode. The following circuit draws no more than 400 microamperes at 10 volts (at 20 KHz out; about 200 microamperes at 10 KHz) and couples the current information out as the frequency sent to T2, whose coils are wound on opposite sides of a ceramic ferrite.

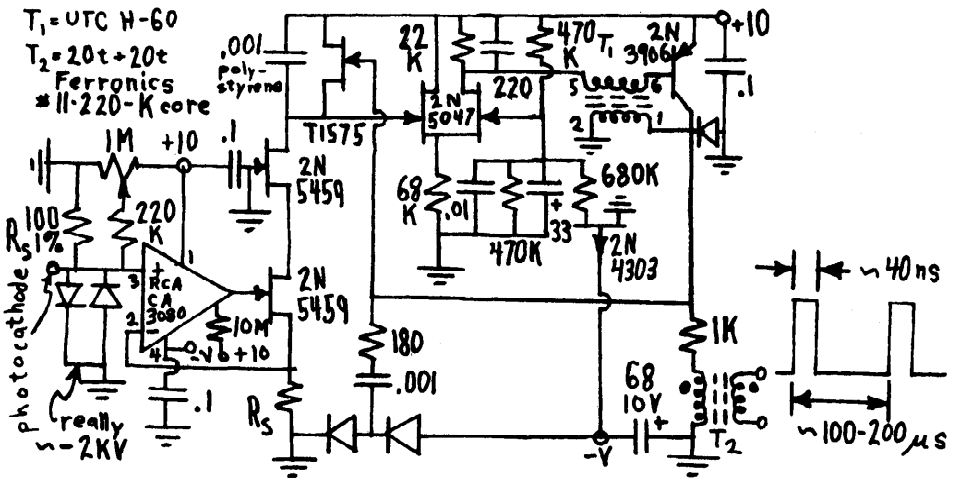

TVD, mentioned above, uses a very carefully designed printed circuit amplifier to supply current to its magnetic deflection coils. Except for the notes with the diagram, we submit it without further explanation or cautions.

Notes:

1 Except where noted, resistors 10%, 1/4 watt.
2 Capacitances in microfarads/volts; electrolytics aluminum.
3 Diodes 1N4727, 1N4154, 1N4009 etc.; stored charge no more than 80 picocoulombs at 1 milliampere foreward current.
4 1D103 = GE thermistor mounted at center of main heat sink.
5 220J = Analog Devices chopper amplifier.
6 * = temperature protection circuit (overtemperature cutout).
7 Q2, Q3, Q4, Q5, Q6, Q12, Q13, Q14, Q15, Q16 mounted on one 1 Centigrade degree per watt heat sink (e.g. Wakefield 621K 1/2 inch in front of Rotron Muffin fan). Case temperature about 70 degrees C max. Ground heat sink and insulate transistors.
8 All transistors Motorola.
9 All zeners 1 watt.
10 VE48X = Varo; could be two 2 A 50 PIV fast recovery.
11 Output capacitance about 800 pf; damping R about 150 ohms for critical damping.
12 Slews from + (or -) 2 A to - (or +) 2 A in 4 microseconds; dE/dt at hot side of deflection coil is about a billion v/sec.
13 Layout is critical, as with most fast high-gain circuits.
   A By-passing and lead inductance: Short wide strips (or, better, a ground plane) should be used for ground bus, and ceramic capacitors with leads as short as practicable used for bypassing. Best bypass capacitor is Allen-Bradley CL series.
   B Ground loops: reference ground (triangles) and power ground must be interconnected only at the cold side of the sense resistor; take care to avoid stray current through the cold side of the signal input.
   C In general, the device should be constructed like a 144 MHz transmitter to avoid its becomming one.
14 The 100 pf stabilizing capacitor may want to be higher to decrease hunting and ringing, which could improve settling time more than the reduced gain-bandwidth would increase it.

Q1, Q12, Q13	MPS-U01
Q11, Q2, Q3	MPS-U51
Q4, Q5, Q6	2N5194
Q14, Q15, Q16	2N5191
Q7	MPS-U02
Q17	MPS-U52
Q8, Q19	2N3906
Q9, Q18	2N3904

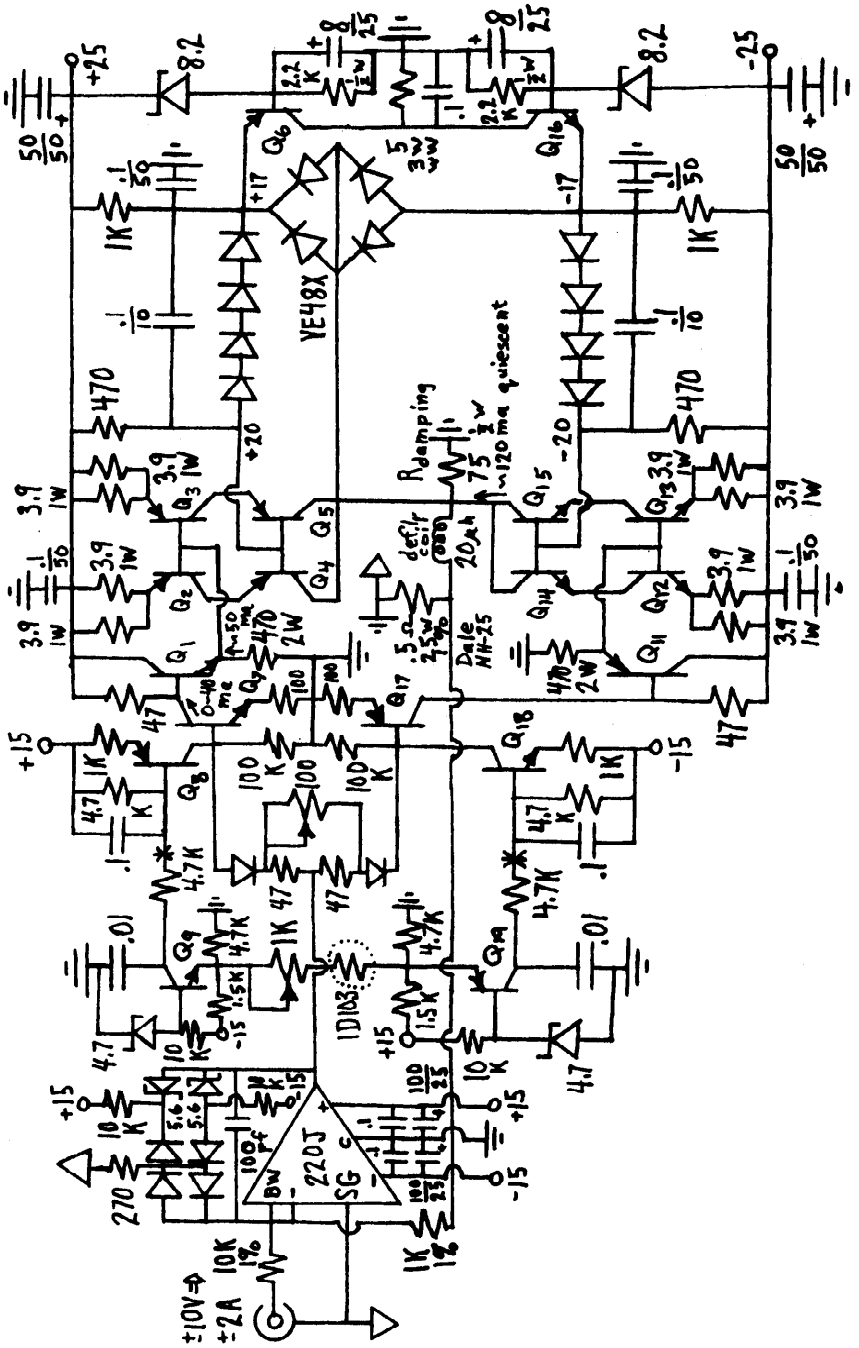
+25
-25
8.2
8.2
YE48X
+17
-17
+20
-20
470
470
1K
1K
3.9 1W
3.9 1W
3.9 1W
3.9 1W
3.9 1W
3.9 1W
3.9 1W
3.9 1W
Q1
Q2
Q3
Q4
Q5
Q6
Q7
Q8
Q9
Q11
Q12
Q13
Q14
Q15
Q16
Q17
Q18
Q19
R damping
75 1/2W
~120 ma quiescent
defl'r coil
20 μh
Dale NH-25
470 2W
470 2W
47
47
47
47
+15
-15
100 K
100 K
100
100
4.7 K
4.7 K
4.7K
4.7K
1K
1K
1.5K
1.5K
.01
.01
4.7
4.7
10 K
10 K
1D103
220J
SG
BW
270
10K 1%
1K 1%
±10V ⇒ ±2A

INDEX

{cross reference} (explanation)

Compiled by Rich Schroeppel and Hilarie Orman.

0 {zero} 43 68
.8453 45
1 {one} 22 57 107 125 158 159 167 169 171 173 175 177 181
1st 49 60 62 115 132 159
1st order 6 15
1:2 80
2 {two} 14 23 31 32 35 43 45 47 48 57 60 63 97 120-123 137 144 149 152 154 159 160
2-dimensional 153
2-NOTS 19
n
2 20 24 64
3 {three} 35 49 68 97 107 116 127
3rd 123 132 163
3-dimensional 112 153
3-space 77
3N+1 133
4 47 50 89 92 115 127 134 136
four-in-a-row 112
4th power 6 14 63
4-letter 176
4-space 107
4-vector 107
4.86% 29
5 47 51 57 61 78 81 90 103
five-in-a-row 91
5th power 63 121
6 73 83 141
7 31 82 97 113 114 160
7-coloring 114
9 72 141
14 105
18 83
20-omino 77
23 63
28 61
30 12
34 68
40 47
63 51
72 bits 25 104
120 60
130 50
220 62
239 63
256 82
284 62
292 101
355 101
672 60
1093 45
3511 45
7094 112
23000 41
2^{18} 41
2^{86} 57
Abramowitz 120 143
accelerating 120 124
accumulator 155 162 164 166 172
Adams, Clifford 49
add 18 40 43 50
add1 64
addition 101 158 159
chain 12
additional 172
address 157 165 172 179
adjacent 68 167 177
advantage 101 172 181
AGM 131 143 144
aleph-two 129
algebra 13 151 154
algebraic
functions 101
number 32 101 178
algorithm 17 101 115 132 149-153 176-180 fig9
alternating series 120
amazing 149
ambiguity 176 181
American Math. Monthly 48 120
amicable number 61 62
analysis 25 143
analytic function 11 126
analyze game 68 74 87 88 94
AND 17-19 22 23 43 115
angle 45 107 137 158
angular velocity 149 151
annoying 177
answer 45 57 105
AOBJN 155 156
appear 39 153
append 101 122
Applied Combinatorial Math. 77 86
approximant, continued fraction 63 101 122 137
approximation 101
arbitrary 19 111 177
arc 123 177
arccos 14 15 116
arccoth 126
arcerf 45
archaeologist 135
arcsin 10

arctan 16 63 101 137 138 140
area 114
arg, complex number 137
argument 132 158-160 172
arithmetic 101
  expression 101
  -geometric mean {AGM}
  mean 131 143
  series 14 35 99 101
arpeggios 168
array 18 38 120 121
Art of Computer Programming {Knuth}
aspect ratio 80 112
associative 12
asymptotic 77 86
automatic 101
axis 3 107 143 152
backing up 176 179
bananananana 176
Banks, Roger 20 133
base {radix}
basis vector 13 14
Berlekamp, Elwyn 69
Bernoulli 12 121
Bessel functons 99 101 178
best 17 72
bignum 101 154
billion 143
binary 12 22 60 63 115 122 128 fig7 132 145 154
binomial 38 42 43 116 118 120 121
bisector 3
bishop 70 78
bit 22 25 37 55 fig1a fig1b fig2 101 104 115 122 128 fig7 132 143 145 159 160 162 167 168 170 173 175 177 181
black 70 84 88 89
black box 19
blackout 68
board 68 76 78 84 90-92 94 112
Boolean 17-24
boundary 20 125 180
bounded 45 47 77
box 112
bracket 30
branch point 130 143
bridge 46
Brillhart, John 28 65
broken line 180
Brown, Steve 75
bug 45 135 181
bum 160 177
byte 164 165
C curve 135 fig8
calculate 26 68 143
carriage return 170
carry 43 115
casting out 167 169
CDR 132
center 51 68 76 112 114 123 149
  -symmetrically 74
centroid 180
certified 137
changing 123 158 167
character 21 134 165 167 170 176 179
cheap 158
Chebychev 14 15 151
checkerboard 84 112
checkers 93
chess 70 78 87 88 95
Chess for Fun and Chess for Blood 70
Chinese remainder theorem 48
Choong 140
chord 168
chromatic number 113
circle 20 32 83 123 fig6a fig6b 125 149-153 177 fig9
circumscribing 20
claim 65 122
Clements, Robert 112
clever 71
clock 123 fig6a fig6b
closed form 10 14 116 118 131 151 177 180
closest 3 15
closure 105
clue 19 101
cluster point 32
code 25
coefficient 13 14 43 44 101 118 125 130
Cohen, Joe 117 148
coin 67
color 71 73 110-114
common divisor 53
Communications of the ACM 112
commutative 101 127
comparison 101 181
compile 179
complement 75 105 122 173 181
complex number 14 55 fig1a fig1b fig2 123 fig6a fig6b 136-138 143
complicate 101
composition of functions 101 107 127
computation 12-14 65 68 83 101 115 123 140 142 153 154 158 177 179
Computers in Number Theory 77
concurrences 2
condition 11 101 111 130
conformal map 11
conjecture {problem} 33 35 56 101 112 125
conjugate 32 107 123
conjunction 137
connected 50 73 114 115 180
CONS 172
consecutive 25 121 160 164 166 175
constant 14 50 51 127 129 152 158 169 173

constrain 101 172 177
construct 39 45 80 135
continued fraction 97-101 122 137 140
  arithmetic 101
continuous 107 115
contours 177
converge 3 12 120 122 124 125 130 142 143
convergent 101
convex 20 24
coordinate 48 52 107 177
copy 24 35 115 122 167
corner 48 50 68 112 153 180
corollary 51
correct 159
correction 101
cosh 158
cosine 14 15 26 107 142 149 151 158
cotangent 142
coth 126
count 18 29 77 81 82 108 112 115 169 177
counter 64 155 170 179
counter (token) 90
counterexample 12
counterintuitive 75
cover 21 50 72 86 110 111
Coxeter 113
cross product 107 180
cube (box) 71 112
  (power) 6 45 58 63
  magic 50 51
  root 8 159
cubic equation 8 10
  partition 18
  polynomial 127
curious 59 77 118
curtains 148
curve 55 fig1a fig1b fig2 66 115 122 123 135 fig8 149 151 177 fig9
cycle 47 132 173
data 29 75 77
Daykin 140
decimal 33 36 37 56 57 101 139 145 159 170
decomposable 112
decrease 19 56
degree (polynomial) 5 13 15 127
  (angle) 152 177
delta 120 181
denominator 12 45 54 101 122-124 140
dense set 3
density 35
dependent 13
derivative 178
determinant 5 101
determine 39 42 47 118 149 152 153
deuce rule 42
diagonal 2 50 68 90 120 121 177
diamonds 112
dice 67 72
difference 14
  forward 37 38 120
differential equation 178
differentiate 118
digit 33 37 39 43 56 57 72 101 115 120 140 141 169 170
dimension
  two 48 107 153
  three 18 107 112 153
  four 107
  n 77 83
  of vector space 1
direction 45 123
dirty 158
disadvantage 181
discover 18 49 64 71 146 149
discriminant 4 5
disordered 46
display 123 145 146 149 153 177
dissection 85 fig4
distance 153 177 180
distinct 22 56 68 71 103 112 115 150 171
distribution 26 32 40 46 107
diverge 133
divide into parts 177 180
division 101 181
  by zero 3 171
divisor 43 53 60 101 110 136
domino 86 111 112
don't care 17
dot product 107 121
dots 69 73
double 14 45 78 158 171 181
dragon curve 135
draw (game) 73 94
  (picture) 55 fig1a fig1b fig2 114 149 177 fig9
dual 75
e 12 37 101 117 118 143 144 158 178
edge 50 112
egest 101
elegant 149
element 82 102 121
elementary function 178
ellipse 149 152
elliptic function 10 131 143 158
empirically 101
empty 52 78 101 172
endpoint 101 177 180
energy 46
epsilon 149 152 159
equal 132 161 174
equation 3 8 9 178
equilateral 112
equivalence class 75
error 3 45 101 117 154 181
  bounds 101
escalation 88
escape code 177
estimates 82 93 101
Euler 107 120

evaluate 13 14 68 116 177 178
even 54 115 133 167 177
exact {closed form} 10 26 41 159
arithmetic 3 152
example 61 68 76 85 86 101 102 110 113 124 127 137 170 177 178 181
exception 32 45 47 138 181
excess-200 173 181
exchange 163
exciting 149
Execuport 21
exist 11 14 18 39 48 76 97 102 107
expected value 29 107
exponent 43 160 173 181
express 1 13 34 47 63 131
expression 14 36 43 57 127 177
extend 77
extra move 94
factor 28 29 45 47 52 61 63 120 136 137
factorial 1 31 34 43 98 103 116 117 121 123 139
fascinating 123
fascist 154
fast 120 142 143
fatal error 154
favorite 25
feedback 17 101
fencepost 157
Fermat 106
fetch 179
Fibonacci 12 14 47 123
field 13 107
find 21 22 31 68 80 86 111
fine structure constant 101
finite 33 39 132
finite-state 115
fit 83
fixed point number 173 174 181
of a function 174
flatsize 134
flip-flop 168
floating point 3 101 160 173 174 181
flow 25 126 127 129 130 132
FMP 181
foo 168
forced win 94
form {closed} 38 47 56 73 112 114 178
formula 1 12 14 18 77 86 120 137 158
forward difference 37 38 120
found 49 61 112 137 179
fraction {continued} 32 122 159 173 181
fractional fibonacci 12
fractional part 55 fig2 141
Fredkin, Edward 38 58
free 172
Freiberg, Jerry 157 165 167
frob 113
FSC 158
function 5-7 10-12 15 17-19 25 68 83 98 99 118 123 fig6a fig6b 125 129 131 132 142 143 151 158 159 174 178 179
future 25
game 42 46 67-76 78 84 87-96 112
gamma 117 120 178
gaps 83
garbage collector 172
Gardner, Martin 49 80 fig3a 112
gates 17
Gaussian distribution 26 27 40
Gaussian integer 55 fig1a fig1b 136 137
GCD 52 101
generalize 14 18 21 47
generate 11 26 27 64 101 137
generating function 7 15 18
geometric dissections 85
geometric mean 131 143
geometric series 38
geometry 2 177
Geometry, Introduction to 113
gigantic 101
giveaway chess 87
Go 96
golden ratio 12 32
goodies 139
government 137
graph 147 177
greater 175
greatest integer 34 101 120
group 56 82 102-104 107
grow 101
gruesome 73
guidance 107
Gurley, Ben 149
hack 145 149 180
hackers 168
hairy 67 97
half 32 123
half-line 18
halfword 148 155 162
Hamiltonian path 103
hand 46 94 123 fig6a fig6b
Handbook of Math. Functions 143
handicap 42
hardware 181-191
Hardy, G. H. 136
hemisphere 107
Henneman, Bill 133
heptahedron 114
heptomino 109
heuristic 75 176-180

hex 94
hexadecimal 122 145 167
hexafrobs 112
hexagon 49 85 fig4 112 114
hexiamond 112 fig5
hexomino 109
Hi-Q 76
high order bit 181
hole 77 112 113
homographic 101
how many? 39 57 77
how much? 42
Hurwitz numbers 101
iamonds 112 fig5
identify 101
identity (equation) 42 101 118 137
identity (group) 12 101 102 107
illustration 55 fig1a fig1b fig2 80 fig3a fig3b 85 fig4 112 fig5 123 fig6a fig6b 128 fig7 135 fig8 177 fig9
image 19 123 fig6a fig6b
imaginary axis 3
impossible 49 50 64 72 112
imprecise 101
increase 18 56 68 99
increment 132 151 177 fig9 179
independent variables 26 29 40 101
independent vectors 14
independently 64 71 77
indicator 68
induction 32 75
inexorable 132
infinite 35 39 91 101 123 135
infinity 83 133
information 158 180
input 17 64 101 115 170 179
Instant Insanity 71
instruction 64 104 149 158 166 169 172 179 181
integer 18 32 34 40 47 52 60 83 101 120 125 130 136 171
integral 116 143
interesting 112 121 123 138 145 146
interexpressible 1
international 137
interpolation 130
interval 15 101 115
intriguing 123
Introduction to Geometry 113
invariant 101
inverse 12-14 25 112 115 118 150 178
invisible 48
iridium 137
irrational 45 101
irreducible 13
isomorphic 107
isosceles triangle 135
iterate 12 14 25 56 61 72 115 124 132-135 158 176 179
itself 122 132
Jensen, Eric 132 170
joys 63
jump 64 76
king 70 78 87 88 89
king-moves 177
knight 38 70 78
known 39 45 61 63 64 80 fig3a 85 86 127 133 143 173
Knuth, Donald 29 55 fig2 101 132
Kok, Jan 2
Komolgoroff 105
L 68
language 80 fig3b 154
large 32 94 122
larger 62 171
largest 14 29 43 72 132 159 179
Lasker, Edward 70
last 106 123 157 176 179
last digit 57
last move 68 84
lattice 48 52 68 177
least common multiple 47
left 112 181
Legendre 29
lemma 19 50
Lenard, Jud 169
length 27 39 47 49 56 57 61 68 123 132 156 169
lexicographic 75
Liknaitzky, Rici 64 155 166
limit 35 77 115 131 142 143
Lindgreen, Harry 85
line 18 38 68 73 93 170 177 180
line-oriented 149
linear 101
linear combination 13 127 151
linked 172 177
Lisp 163
list 68 82 132 170 172
listen 168
location, memory 161 172 179
locus 45
log 12-14 26 29 35 117 143 144 158 160 178
log2 120 132 160
logic 17-24
long 68 123 132
longest 33
longhand 134
loop 3 25 57 61 62 101 132-134 154 176 177 179 180
lose 180 181
low 22 25 145 160 168 170 181
lowest 5 46
lowest terms 101
LSH 25 158
machine 25 64 66 101 115 180

machine independent 154
magic 49-51 81 165
magnitude 123 154 173 177 180
majority 17
Mann, Bill 169
map 11 18 107 113 115 128 fig7 132
mask 22
match 101 115 132 173 179
Math. and Plausible Reasoning 125
Math. of Computation 140
Mathlab 4 127
matrix 14 107
maximum 35 39 56 63 67 68 164 180
mean 131 143
measure 45 107 137
member 47 61 62 115 120
memory 115 154 161 172
Mersenne 28 63
method 3 12 21 26 29 42 126 143 170 172 178 179
metric 101
midpoint 177
minichess 78
minimal 12 21 22 85 137 149
minimal representation 101
minimum 17 21 62 73 98
Minsky, Marvin 64 149 153
mirror 135
mistake 149
Mitchell, George 156
mode 177
modern analysis 143
modular function, elliptic 10 139
modulus 12 13 43 45 47 86 101 122 136 167
monotonic 18 101 177
Montroll, E. W. 86
more 37 112 122
most 46 fig3b 95 114
move {game} 25
MOVN 181
Mozart, Wolfgang 63
multinomial coefficient 43 44
multiple 45 57
multiple valued 137
multiplication 12 101 107 137 149
multiplication formula 1 14 158
multiply perfect number 60
multiprecison {bignum}
munching squares 146-148
Murphy 176
music 168
myth 154
n-space 11 27
n-sphere 11 107
narrowness 101
natural boundary 125 130
nearer 177
nearest integer 101
necessary 111 130
negation 101 123 181
negative 133 138 143 153 170
negative radix 128 fig7
neglected term 159
neighborhood 107 177
Nelson, Stuart 162 174
never 94 162 171
new 149
Newton's method 3 12 126 178
next 120 123 160
Nim 68 74
no 18 50 51 63 76 107 112 127 132
noise 145 180
non-commutatively 107
non-digits 170
non-exponential 68
non-integer 130
non-regular continued fraction 122 140
non-trivial 28 137 145
non-uniform distribution 32
nonlinear recurrence 15
nonzero 13 57 107
norm 136
normalize 27 181
not 17 19 68 113 115 161 172
noted 56
nth 5 7 14 15 37 38 43 57 101 115 120 121 130 176
numerators 101
numerical 22 151 181
representations 101
n
n 118
occurrence 62
octagons 135
octal 145 169
octant 18
odd 45 68 133 167
odd-even 177
offset 167
omino {polyomino}
one {1} 67 101 122 169 181
one-digit 56
one-to-one 11 101 115
one-ups-manship 169
ones-complement 154
only 45 47 57 63 64 71 76 174
onto mapping 11 115
opening 148
operand 101 181
operation 11 34 101 132 146 172
opponent 78 88
optimal 67 72
option 176
OR 18 19 23 25
orbit 153
orchestras 63

order 12 14 15 50 51 77 81 94 108 112 117 169 181
ordered pairs 12 151
ordering, partial 18
origin 52 149 153 156
original 22 124
orthogonal matrix 107
outer 177
output 25 101 115 168 176
overflow 154 167
overlap 84 176
packed 71
pair 12 61 62 101 103 151
palindrome 177
parallel 50
parallelogram 112 114
parameter 107
parity 115 122 167
partition 18
Pascal's triangle 121
Paterson, Mike 71
path 19 103
pattern 114 122 123 145 154
pawn 70 78 87 89
PDP-1 74 75 123 fig6a fig6b 146 168
PDP-6/10 104 168 169 173 174 179 181
peg solitaire 75 76
pentagon 85
pentomino 84
perfect number 60-62
period 68 101 132 154
periodic 45 101 149
permutation 22 56 75 103 104
perpendicular 3 107 120 180
Perron 100
phase 137 143
phenomenon 176
phi function 45
phrase 176
physically 123
pi 45 52 55 63 101 107 116 119 120 124 137-139 143
pi(x) 65
pingpong 42
pitch 107
PL(n) 18
place 139 166 178 180
placing 68 84 90
planar partition 18
plane 52 109 111 114 143
platinum 137
player 42 67-69 72-74 84 87 88 90 92 94
plotter 123 fig6a fig6b 149 177
Plumer, Dave 71
plus 23 75
point 32 42 48 52 107 123 130 145 149 150 152 160 174 177 180 181
pointer 156 157 164 165 172 179
poker dice 67
polar 107
pole 101
Polya, George 125
polygon 2 20 180
polygonal 177
polyiamond 112 fig5
polynomial $\{x^2\}$ 5 12 14 15 101 121 127 178
polyomino 77 108-110 112
position 22 68 76 93 95 96 103 115 170
positive 34 98 133 137 153 170 173 174
possible 68 72 130 132
power 12 14 32 37 38 43 47 53 57 63 101 118 120 121 125 127 129 130 149 154 159 167 181
power, large 32
precision 101
predecessor 115 150
prediction 25 29 47
preempt 101
preserve 22 115
previous 122 130
prime 17 29 30 33 35 41 43 45 47 48 52 62 65 136 137
primitive root 57
print, decimal 170
probability 29 37 42 52-54 57 107
probable, most 46
probably 32 35 83 85
problem 1 2 11 17 19 21 22 27 31 32 34 36 39 42 47 49 68 70 73 101 103 107 110 111 116 119 123 127 129 130 133 150 177 180
procedurally 101
procedure 13
product 13 45 47 56 107 122
PROG2 163
program 57 61 64 75 77-96 101 103 123 137 145-180
progression 35 99
project 11
projective 107
promoted pawn 87
proof 13 18 32 50 52 94 97 106 113
propoganda 101
prove 89
proved 31 35 47 64 85 122
pseudorandom 132
pushdown 158 170
PUSHJ 158 177
puzzle (games) 56 71 79 112
puzzle (question) 18
Pythagoras, Joe 58
quadrant 18 158 177
quadratic 3 143
quadrillion 30
quadrisecting 115
Quarterly Journal of Pure and Applied Math. 139

quartic equation 4 9
quaternary 37
quaternion 107
queens 87
question 57 114
quintic equation 10
quotient 99 171
radius 83 125 150 153
radix {binary, ternary, quarternary, octal, decimal, hexadecimal, negative, complex} 33 37 43 55 figla figlb fig2 63 101 115 122 128 fig7 154
Ramanujan 31 139
random number generator 25 132
random number 25-27 29 32 37 52 54 57
random variable 40
random vector 27
range 40 83 101 133 158
range-reduced 143 158
rapidly 14 122
raster 21
rate 14 143
Rathbone 140
ratio 38 80 101 159
rational function 12 101 125
rational number 38 45 54 101 130
Rayfield, Malcolm 135
re-normalize 181
reactionary 101
read-only 154
real number 3 32 45 105 115 137 138 143 178
recant 101
reciprocal 101 120
recognize 101
rectangle 68 80 fig3b 86 110 112
recurrence 12-16 44 151 158
recursive 158 170
rediscovered 64
redouble 45
reduce 101
references 48 49 56 70 77 79 80 85 86 100 105 112 113 120 125 136 139 140 143
reflection 1 81
region 2 20 24
register 25 149
regular 101
Rektorys 12
related 45 63 145
relation 13 14 121
relatively prime 48 52
relevant 173
remarkable 151
remove digits 33
repeated 12 67 131 132 143 167
repeating pattern 114
replace 127 133 134 169 177
representation 107
representing 20
required 37 113
restored 158
reverse bits 167
reverse paths 103
Riemann surface 143
right angle 137
rightmost digit 14 33
rigid rotation 107
roll 72 107
rook 78
root 3 5 8 9 12 14 34 57 77 101 126 127 143 149 151 158
Root, Steve 61 169
ROT 104
rotate 11 103 107 123 135 153 166
rotation 81 107 146
roundoff 3 101 173 181
row 50 78 90 91 112 115 120 121 179
rule 12 42 67 84 102
ruler function 132
salvaged 45
Samson, Peter fig3b 164
satisfying 9 45 115 129 178
scalar 12 107
scale {stretch}
Scarne, John 90
Schutzenberger, Marco 39
Scientific American 49 79 80 85 fig4 112
Scientific American Book of Puzzles 80 fig3a
score 42 67 72
Scott, Dana 133
search 31 61 176 177 179
seems 47 68
segment 39 177 180
self, map into 132
self-referent list 132
semigroups 82
semiquadrant 177
sentinel 160
separating 151
separation, minimal 62
sequence 14 38 39 115 176 177 179
series 12 47 115-125 129 130 139 158
set 3 17 35 45 48 52 84 105 107 115 132 137 150 170 172
SETQ 163
Shanks, Daniel 65
shape 20 48 111 112 115
shift 25 132 167 181
short program 101 145
show 42 72 107 110 112
shrink 20 101 123 135

side 20 49 68 76 78 80 fig3b 86 94 95 110 112 114 137 177
sigma 116 118 120 123 124
sign 154 160 168 173 177 181
sign-magnitude 154
signals 145
Silver, David 135
Silver, Rollo 25
Sim 73
similar 51 68 97
similarity 127
simple 18 97 115 146
simplify 177
simultaneous 68 144 151
sine 10 26 101 107 129 142 149 151 158 159
single 153
sinh 158
size 29 149
skip 83 162 179
sliding block puzzle 79
slope 38
small 80 101 106 158
smaller 62 158
smallest 48 68 80 fig3a
smidgen 45 181
snowflake curve 135
solid 153
solitaire 76
solution 8-10 21 27 31 35 49 71 112 fig5 127 136 137
solve 10 21 68 71 78 79 84 90-96 143 144
Soma 112
soma-like 77 112
space 11 19 27 77 107 123 158
spacecraft 107
spacefilling curve 66 115 122 135
spacewar 114
special 64 137 181
Speciner, Michael 18 62 160
speed 123 158
speed of light 101
sphere 11 27 107
sporadic 122
square (rectangle) 48 68 69 80 fig3a fig3b 85 fig4 86 90 112 115
square root 9 34 97 101 126 137 143 152 158 159
sqrt(2) 32
sqrt(3) 116
square (exponent) 5 6 12 14 31 36 45 47 59 63 80 119 124 127 144 169
square, magic 50 147
square, munching 146 148
square waves 168
squashed 180
stability 150 151
stable 149 152
stalemate 73
Stallman, Richard 166
standard form 101
starting 76
state 25 46 115 148
Stegun 120 143
step 135
step function 83
step (walk) 45
step (number required) 12 14
stereo 145
stereographically 11
stop! 19
stopped 57
store 132 172
straight 38
strategy 67 72 73 154
stretch 11 52 135 127
string 18 37 39 122 128 fig7 154 170 176 177 179
String fig3b
sub-cycles 47
sub-problem 39
subexpression 101
subgroup 107
subroutine 101
substitute 101 122
substring 179
subtract 64 101 155 158
succesive appoximations 101
successor 68
suit 46
sum 29 43 50 60 61 72 76 121-124 fig6a fig6b 154 180
super-fast 142 143
superimposing 20 135
surface 143
Survey of Applicable Math. 12
susceptibility 25
suspicious 32 122
Sussman, Gerald 163
swap 103 161 162
sweep 123
switch 132 146 148 168
symbolic functions 101
symmetric function 5-7
symmetry fig1b 101
synthesize 17 19
system 107 154
table 115 132 165
tabulated 72
Tactix 74
take-away games 68
tangent 16 107 142 158 177
tanh 101 158
Taylor series 158
Technology Review 56
Teco 176
Teeko 90
term 14 34 101 120 122 123 129 139 140 159
term, last 101
terminate 101
termination 181
ternary 36 37
tessellating 109
tesseract 51
test 47 158 159 177
text 176

theorem 29 38 48 85 106
theory 68 77
Theory of Numbers 136
thermodynamic 46
three {3} 60 70 166
Thue 122
tic-tac-toe 91 92 112
Tiger Puzzle 79
time 28 65 68 93 123 144 147 160 178
top-tested 177
toroidal space 101 114
total 25 72
tracing 123
trailing 132
transcendental functions 101
transcendental number 101 122
transfer {jump} 179
transform 12 158
transformation 120 124
translate 11 107 127 168
trap 154
trapezoid 112
TRCE 162
tree search 75
triangle 73 75 85 112
triangle, Pascal's 121
trick 101
trillion 29 30
trinomial coefficient 116
triple 14 88 158
truncation error 101 181
twice 39 50 86 123 158
twin primes 30
two {2} 52 57 61 62 68 72 73 84 89 90 162 163 172 177 180 181
two counter 64
two-dimensional 18
two-member 61 62
twos-complement 154 181
typeout 170
typical 77
typo 10 101
unclear 123 150
underflow 160
unequal 46 52 80 181
unfeasible 93
uniform 26 27 32
uniformly 32 40 107
union 52 101
unique 13 49 55 fig1a fig1b fig2 101 102 130 136
unit {sphere, interval, circle, quaternion, cell, square} 27 32 83 107 114 115 123
universal 64
universe 154
unknown 101
unnormalized 181
unproven 92
unstable 3
upward 19
useful 151 176
valid 113 143
value 13 17 25 29 50 99 107 122 132 147 177
variable 6 7 17-20 40 156 163
variance 40
variations 112 123 145
vector 12 13 27 107 180
velocity 149
Venn diagram 20 24
verboten 88
verified 77 107 112
verify 28 85
vertex 180
views 147
visible 48
visual information 180
volume 107
Waltz, Dave 21
Watson 143
waves 168
white {chess, checkers} 70 84 88 89
Whittaker 12 143
win 42 67-69 72-75 84 87 89 90 92 94
window-dice 72
wobble 153
wonder, great 149
word (computer) 25 157 165 169
Wright, E. M. 136
Wright, Jackson 146
x^2-2 127
x^2-x-1 12
XOR 17 23 25 68 115 147
Yao, Frances 64
yaw 107
year 93
zero digit 18 36 57 122 132 170 181
zero element 13 47 107
zero loop 133
zero of polynomial 5
zero (number) 32 35 45 64 101 143
zero, division by 3 171
zeroless 57
zeta function 53 119 124 178