A Panelized Roof System For Residential Construction: Development, Application, and Evaluation

by

Michael J. McCormick
B.S., B.Arch., Ball State University
Muncie, IN
August 1988

SUBMITTED TO THE DEPARTMENT OF ARCHITECTURE
IN PARTIAL FULFILLMENT OF THE REQUIREMENTS FOR THE DEGREE:

MASTER OF SCIENCE IN BUILDING TECHNOLOGY

at the

MASSACHUSETTS INSTITUTE OF TECHNOLOGY
May 1994

Signature of the Author _____
Michael J. McCormick
Department of Architecture
May 6,1994

Certified by _____
Leonard Morse-Fortier
Assistant Professor of Building Technology
Thesis Supervisor

Accepted by _____
Leon R. Glicksman
Director, Building Technology Program

A Panelized Roof System For Residential Construction: Development, Application, and Evaluation

by

Michael J. McCormick

Submitted to the Department of Architecture on May 6, 1994
in partial fulfillment of the requirements for the degree of
Master of Science in Building Technology

ABSTRACT

The challenge of providing affordable housing has long been an issue with which architects and builders have been struggling. In an effort to improve both the quality and the affordability of the housing stock that is being constructed today, the Innovative Housing Technologies Program at M.I.T. has proposed a panelized roof system for residential construction. Although the system had been developed conceptually and even applied to a proof-of-concept structure prior to the involvement of this author, much of the detailed analysis and investigation had been left undone.

This thesis carefully examines the roof system in terms of its structural integrity and the ease of its installation. Utilizing basic structural analysis tools, and some more advanced techniques, including finite element modeling, the system has been thoroughly analyzed with regard to both gravity loads and lateral loads. Furthermore, the system has been installed on a complete house in Pittsburgh, providing the valuable insight of a real-world application.

From this examination and experience, several design changes have been identified which will improve system performance during manufacturing, delivery, installation, and throughout the occupancy of the home. Each of these design proposals will be presented in this thesis. In addition, this investigation has also created an acute awareness of the system's capabilities and weaknesses. From this, a series of guidelines for the system's application have been prepared. These will be identified, and the implications that they have on the design of houses will be discussed.

Thesis Supervisor: Dr. Leonard Morse-Fortier
Title: Assistant Professor of Architecture

Acknowledgements:

A portion of this work was funded by the U.S. Department of Energy through the Innovative Housing Construction Technologies Program

I am also grateful to the following :

the people at IBACoS, for creating the opportunity to install the roof system on a "real" house

Dave Phillips and Chad Oliver, for their enduring assistance in manufacturing the panels for the IBACoS House

John Crowley, for providing the drive behind the continuing development of the roof system

Professor William Porter, for providing a much needed design perspective on this project

Professor Leonard Morse-Fortier, for providing guidance, assistance, and encouragement throughout this work. The most memorable and valuable aspect of my education at MIT has been our friendship.

my parents, for the love and support they have given me throughout my life

and especially to Kelly, my wife, who has constantly supported me and generally made my life wonderful. ***It's your turn now!***

Contents

Appendices (cont.)

Variables

A	Cross sectional area
A_n	Cross sectional area of a particular element
b	Width of the section through which shear is being calculated
c	Distance from the neutral axis to the extreme fibers
C	Compressive force
d	Distance from the overall neutral axis to an element's centroid
DL	Dead load
E	Modulus of elasticity (Young's Modulus)
f_b	Bending stress
f_c	Compressive stress
f_t	Tensile stress
f_v	Shear stress
f_τ	Torsion stress
F_b	Maximum allowable bending stress
F_t	Maximum allowable tensile stress
F_v	Maximum allowable shear stress
F_τ	Maximum allowable torsion stress
G	Modulus of rigidity
H	House width
I_n	Moment of inertia of a particular element
I_x	Moment of inertia about the x-axis
I_y	Moment of inertia about the y-axis
I_{msr}	Transformed moment of inertia for MSR
I_{osb}	Transformed moment of inertia for OSB
J	Polar moment of inertia
l	Span
ld	Development length
LL	Live load
m	Internal bending moment caused by a unit load at midspan
M	External bending moment

M_{max}	Maximum bending moment
M_{τ}	Torsional moment
Q	Static moment of the portion of the element outside the plane in which shear is being calculated
r_n	Distance from the centroid to a particular element
s	Shear strength of screws
sp	Spacing of screws
sp_{min}	Minimum spacing of screws
T	Tensile force
V	Shear force
V_{max}	Maximum shear force
V'	Shear force per unit length
v	Internal shear force caused by a unit load at midspan
w	Uniform gravity load (dead load + live load)
x	Horizontal distance along the length of a beam or panel
x_n	Horizontal distance from the centroid to a particular element
X	Horizontal distance to the centroid from a reference axis
y_n	Vertical distance from the centroid to a particular element
Y	Height of the centroid above a reference axis
α	Roof slope
Δ	Total deflection
Δ_b	Deflection due to bending
Δ_v	Shear deflection

Chap. 1 *Introduction & Background*

Introduction

The research embodied in this thesis is essentially a continuation of work that began in 1988 under the Innovative Housing Construction Technologies Program at M.I.T. Prior to the author's involvement, the members of the program had proposed a panelized roof system for residential construction. The system had been developed in concept, and a test application had been constructed. However, many of the details had not been worked out and much of the analysis needed to ensure its structural integrity had not been conducted.

This thesis will attempt to fill in many of these gaps through a series of investigations, including basic structural analyses, finite element modeling, and the installation of the system on an actual home. This research has also been conducted in parallel to the design of a manufacturing line for the roof panels, and consequently many of these findings have affected the outcome of this thesis and the design of the system itself. For more information on the manufacturing of the panels, refer to Phillips, 1994 and Ward, 1994.

Because this work is part of an ongoing project, much of the background information regarding the system will be summarized here. This is by no means a detailed account of the research and subsequent decisions that have lead up to this point, but it should provide the reader with enough insight to fully comprehend the work embodied in this thesis. For more information on the previous work, see Crowley, 1989, Dentz, 1991, Kucirka, 1989, Morse-Fortier, 1991, Parent 1991, et al..

Background

The problem of providing affordable housing has troubled our society for centuries, and during that time many well known people have expended a considerable amount of energy trying to solve this problem. Starting at the beginning of this century, experiments in panelization and other forms of prefabrication began appearing all over the world, as many embraced the benefits of industrialization and the technological advances of the time. This examination has been so extensive that John Burchard wrote, in his review of a book about prefabricated housing:

> *It would seem that no one could read through the list of prominent names and distinguished inventors appearing in the text without some sense of humility. Here is a galaxy of well-known names; here are the fruits of incalculable hours of thought and research by able men; here are ideas that cover in principle almost everything that a human being might conceive in the field of redesign of house structure; here is mute evidence of the expenditure of thousands, nay millions, of dollars, representing the time of many brilliant men and the labor of many others. The total cost of all the effort epitomized here may well be of the order of a billion dollars.* (Herbert, 1984, p.4)

However, today the cost of new housing continues to rise faster than the mean household income, as the promises of industrialization have not been widely incorporated into the homebuilding industry. In an effort to improve this situation, a group of people at M.I.T. formed the Innovative Construction Technologies Program. (IHCTP)

The IHCTP is an interdisciplinary group formed with members from the departments of architecture, civil engineering, the school of management, and the Laboratory for Manufacturing and Productivity. Its goal is to identify and propose innovative building techniques which can significantly improve the quality and the affordability of new houses built in the U.S. It is not to revolutionize the design of houses, but rather to look for new materials, manufacturing techniques, and building systems that can fit within current housing designs. Since it was formed, research within the IHCTP has focused on topics such as material investigation, manufacturing capabilities, building systems, and the real estate market itself. In addition to being a multi-disciplinary group, the IHCTP has also developed close ties to the home building industry. It has been sponsored by a variety of companies within the industry and has received guidance from an advisory board, made up of many of the industry's leaders. Refer to Dentz, 1991 for more information regrading the IHCTP.

The Panelized Roof System

After carefully studying of the homebuilding industry and the forces that shape it, the IHCTP discovered that the exterior shell of the house, which includes framing, insulation, sheathing, windows, and interior drywall, represents between 30 and 40% of the total cost of a home. (Dentz, 1991) The construction of the roof alone typically makes up a large proportion of this percentage, due to its complex geometry, its structural requirements, and the need for it to provide an effective thermal and moisture barrier. Therefore, the attention of the IHCTP quickly focused on the roof.

To improve the way roofs are typically constructed, the IHCTP proposed a panelized roof system. Roof panels can be manufactured in the factory, combining both insulation and the structural envelope. The panels can then be shipped to the construction site and lifted into place with a crane. In this way the building can be quickly "closed in", benefiting the construction crew in terms of both time and comfort.

Furthermore, because the system needs no interior bracing or cross ties, the space below the roof is habitable. This creates many opportunities for additional floor space and cathedral ceilings. Today, the industry standard for the construction of most roofs is to use prefabricated roof trusses. However, roof trusses do not allow the space under the roof to be utilized for anything but insulation. This is the primary advantage that a panelized roof system has over roof trusses.

The panelized roof system is based on stressed skin technology. Stressed skin panels differ from conventional framing in that the majority of the load is carried by the skins, rather than the rafters. Consequently, because the rafters are no longer responsible for much of the load, they can be reduced in size or, in some cases, eliminated entirely.

Some roof panels on the market today utilize a thick layer of rigid foam insulation between two sheets of plywood or oriented strand board (OSB). In this case, the foam insulation is primarily responsible for resisting the shear that develops in the panel as internal bending moment increases. (Figure 1.1)

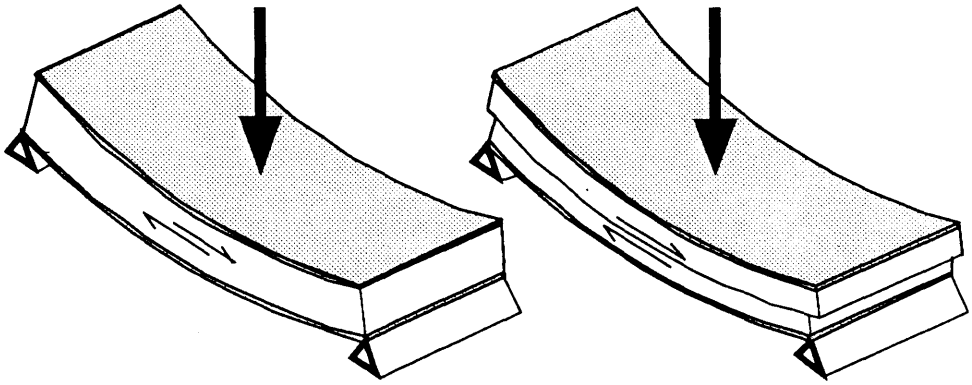

Figure 1.1
ShearResistance in Foam Core Panels Prevents Splitting

However, rigid foam core panels have failed to make much of an impact on the industry because of their high cost. The problem is that in order to be structurally effective at medium to long spans, the depth of the panel has to be increased to a point where the roof ends up being over insulated and very expensive. (Kucirka, 1989) The other problem with foam core panels is that creep occurs within the insulation. Because most polymer based foam insulations were not originally intended for structural use, it is believed that over time there will be a considerable amount of strain in the foam, potentially causing problems due to deflection.

The IHCTP chose to design stressed skin roof panels that transfer shear with discrete ribs made of a stiffer and stronger material than foam, namely oriented strand board. The space between these ribs could then be filled with a less expensive, but effective, insulating material. The resulting configuration actually resembles typical construction, but the behavior is quite different. (Figure 1.2)

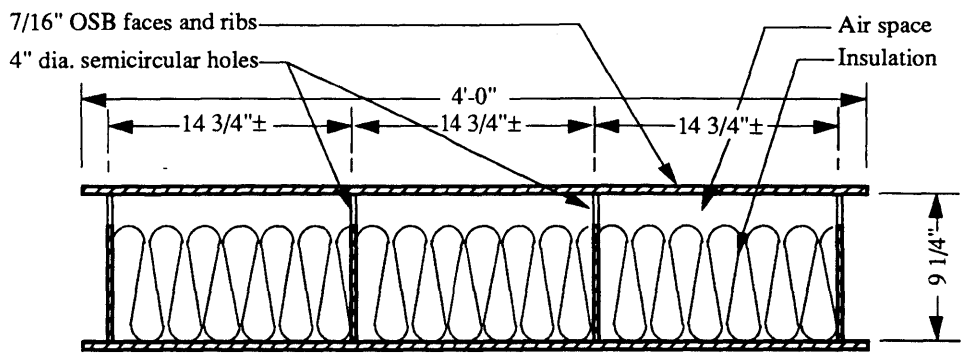

Figure 1.2
Section through a Typical Roof Panel

The spacing of the ribs is based on the typical 16" on center spacing of rafters. This spacing approaches the limit that a single thickness of OSB can span, and it allows standard batt insulation to be used between the panels. (Dentz, 1991) The size of the roof panels is limited by the standard production of OSB and the manufacturing setup for the panels. Typically, OSB is produced in 24'x4' sheets, and therefore, the length of the panels must be 24'-0" or less. The width, on the other hand, is a function of the rib spacing. The manufacturing line has been set up to accommodate panels with one, two, or three bays, thus limiting the widths to 18 3/8", 33 1/4", and 48". Other widths may obviously need to be manufactured, but for this, a special manufacturing setup will be required.

Care also has been taken to create an open space for ventilation between the top piece of OSB and the insulation. This prevents heat build-up within the roof, which can lead to the degradation of both roofing and insulating materials, by allowing air movement from the eave up through the panels and out a ridge vent. However, where hips and valleys occur, this air must flow across the panels before it can proceed to the ridge vent. For this reason, the ribs were to be manufactured with 4" diameter semicircular holes at the top, thus allowing free air movement across the panels.

The panels were joined together with splines that were pushed up into the pocket that is created when the panels are placed next to each other. These splines were then screwed into each panel from the top and bottom faces. (Figure 1.3) The

splines were made with two OSB faces and rigid insulation in between. Additionally, to make up for the small variations that can occur in the panel depth, a thin layer of foam rubber was added to the middle. The splines were also manufactured with gaps in the insulation that correspond to the location of the semicircular holes in the ribs, thus assuring the possibility of air movement between panels. (Dentz, 1991)

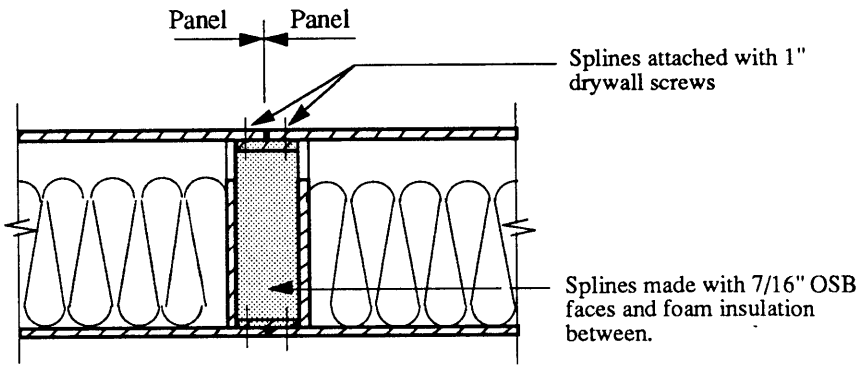

Figure 1.3
Spline in a Typical Panel-to-Panel Joint

The panels were designed to span between the exterior wall and a large triangular ridge beam. At the top of the wall, the panels were attached by screwing through the top plate of the wall and into the bottom of the panel, where integral reinforcing secured the panel against uplift from wind loads. (Figure 1.4)

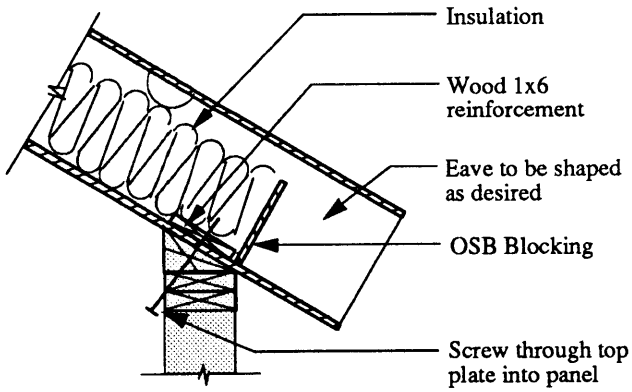

Figure 1.4
Original Eave Connection

At the ridge, the panels were attached by screwing up through the ridge beam and into a ledger board that was attached to the panels. The ridge beam, which spans between two supporting walls or columns, was a large composite element made up of small triangular wood trusses, two layers of OSB sheathing, and parallel strand lumber in each corner. (Figure 1.5)

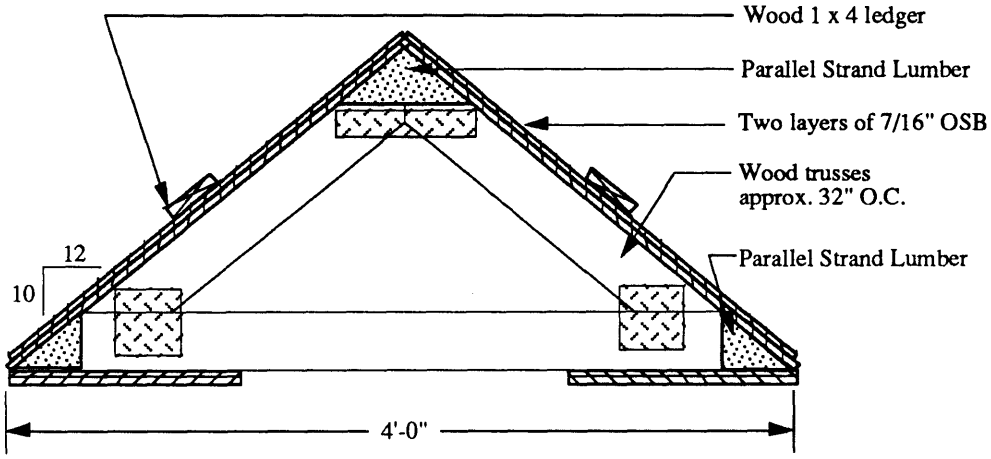

Figure 1.5
Section through the Original Ridge Beam

It has several functions. First, it provides support for the panels and for those installing it during erection . Second, it carries slightly more than half of the total gravity load on the roof. (Figure 1.6) Third, it resists almost all of the horizontal loads on the roof, as the walls perpendicular to the load offer virtually no resistance. (Figure 1.7) The design of the ridge beam, therefore, has become critical to the roof system.

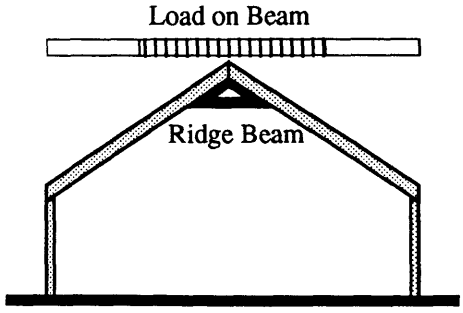

Figure 1.6
Gravity Load Distribution

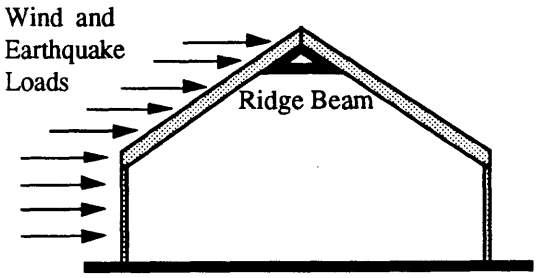

Figure 1.7
Lateral Load Distribution

The system was designed to be installed with a relatively small crew and a crane. Once the framing of the house had been properly prepared, the first step was to lift the ridge beam, which weighs between 600 lbs. and 800 lbs., into place and securely fasten it to the house. Next, the panels, each weighing approximately 300-400 lbs., were lifted into place and set down on the ridge beam, where a ledger on the bottom of the panel engages the ledger board on the ridge beam, preventing the panel from sliding off. This process was repeated until all of the panels were in place. Splines were then shoved up into the cavities created by the panels sitting side by side and fastened to the panels with drywall screws. At that point, the roof was completely closed in and ready to receive the roofing felt that is typically installed under most types of roofing.

Goals of the Roof System

As the task of coming up with a better roof system began, several goals were set to guide its development. Then, as options were discussed and ideas flourished, they could be evaluated against theses goals. The primary goals of the roof system are listed below.

To be transparent, in terms of its impact on the design of a house

As stated previously, it was not the intention of the IHCTP to revolutionize the design of a typical American home. Although the creation of a *transparent* technology might be seen as a tremendous "missed opportunity", especially to technically oriented designers, it was determined that this was a key to success in the broader market. Systems that have tried to change the way houses are designed in the past have been destined for failure. A great deal of cultural inertia, which tends to inhibit innovation, exists within the home building industry.

Therefore, the roof system was designed to accommodate a wide variety of roof forms and finishing materials, all without looking like a *new* construction system. The intent was that the system could provide almost total design

flexibility, advantageous for both simple roofs and very complex ones, something that roof trusses could not accomplish.

Furthermore, the system was designed to fit within the existing building standards. The width of the panels is 4'-0", standard in wood frame construction, and the depth of the panel has been set at 9 1/4", corresponding to 2x10 rafters. Therefore, the system could easily be incorporated into a standard wood frame building. In addition, all finishes, which provide the most important aspects of the *look* of the house, are applied after the panels are in place. This allows for a wide variety of material combinations and changing trends, all of which can completely cover the roof system itself.

To provide an economical alternative to traditional construction methods

Of course, for anything to be successful in the marketplace, it must be cost competitive. For the panelized roof system, this is further exaggerated by the cultural inertia previously discussed. It has been estimated that for the system to be successful, it must cost 10 to 20% less than typical roof construction. It is not, however, intended to be cost competitive with roof trusses. The utilization of the system in itself represents a substantial value added because of the increased floor space that is possible. However, in order to compete with other means of building roofs, the roof system has been developed with cost in mind.

The first issue that was targeted for potential cost savings was material use. In fact, the entire structural strategy is intended to utilize materials as efficiently as possible. Furthermore, all of the materials used in the panels are widely available and reasonably priced.

Cost savings in the form of reduced construction time has also been an important consideration. The system has been designed so that at the time of installation, all that has to be done is to lift the system into place and screw it down. Ease of lifting the panels, connecting them to each other, and tying them to the house have all been, and continue to be, carefully considered.

Efficiency in manufacturing is another area with potential cost savings, and as such it has also shaped the way the panels have been developed. The type of joints required, the type of glue and its curing time, and the total number of discrete elements being assembled to make a panel have all influenced the design. For example, blown-in insulation is now being used instead of batt insulation simply because it will be more efficient during the manufacturing process.

To provide enhanced performance

For the system to be successful in the marketplace, it not only needs to be cost competitive, but it must also differentiate itself by offering something that the traditional methods do not. The roof system sought to do this by providing a better thermal enclosure. Increased resistance to heat flow is provided by the reduced cross sectional area of the ribs. (Figure 1.8) This reduces the thermal bridging that can occur and increases the effective R-value of the panel. (Peavey, 1990)

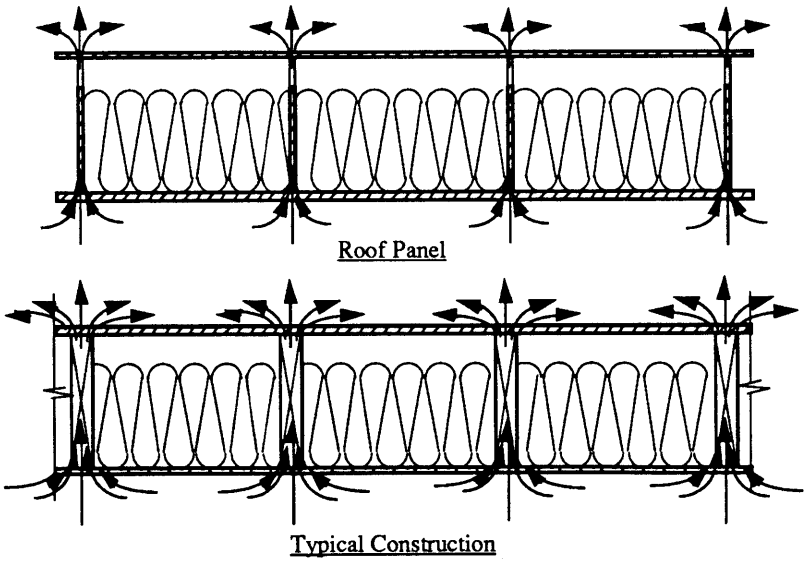

Figure 1.8
Heat Flow through Roof Panels vs. Typically Construction

Structurally, because the skins, rather than the ribs, are utilized to carry the loads, the required span to depth ratio is comparable to that of typical construction. Figure 1.9 clearly demonstrates that at most spans this is true. (Appendix A provides the spreadsheet calculations for this graph)

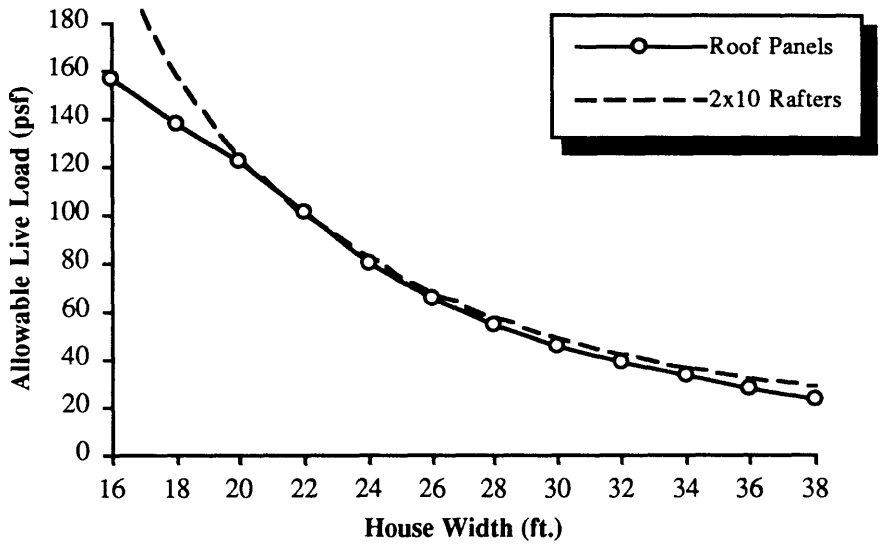

Figure 1.9
A Comparison between Roof Panels and Typical Rafters

Issues to be Resolved

When the work on this thesis began, there were still several outstanding issues that needed to be resolved. During the summer of 1991, a proof-of-concept structure was built to demonstrate the system's abilities and weaknesses. The panels, splines, and the ridge beam were manufactured by hand, and then lifted onto an exterior shell that had been constructed expressly for this purpose. Drawings of the proof-of-concept design can be found in Dentz, 1991.

Throughout this process, several difficulties with regard to the manufacturing and installation became apparent. For this reason, continuing research has focused on these two issues and one other: flexibility. Although the proof-of-concept structure clearly demonstrated that many roof forms could be

accommodated (it included a gable, a hip, a turn gable, and a dormer), flexibility within the living space it created was still a concern. At the time, no way of providing natural light into the space below had been developed. Chapter 2 will examine this problem and propose a solution.

Difficulties in manufacturing the panels also led to further investigation into their design. Several changes have been made, primarily as a result of the development of a manufacturing line. The first change in the design has been in the way the panels are stiffened in the transverse direction. Originally, short pieces of OSB were inserted between the ribs to serve as blocking. (Figure 1.10) However, to simplify the manufacturing, this blocking has been eliminated. The transverse stiffness of the panels will now be provided by end caps made of OSB and a block of stiff foam in the center of the panel. (Figure 1.11)

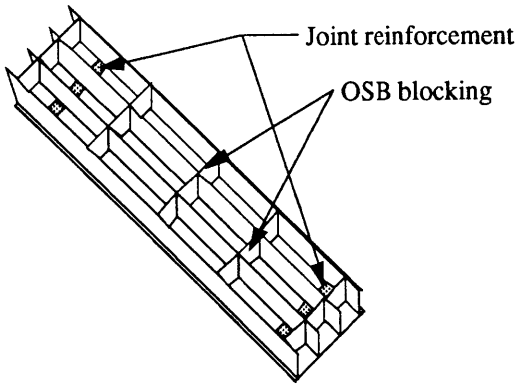

Figure 1.10
Original Panel Design

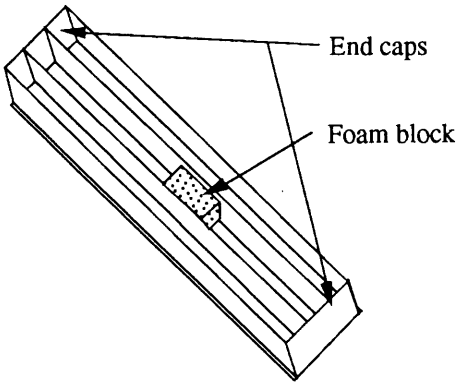

Figure 1.11
Panel Design after Modifications

The second change precipitated by manufacturing difficulties has been the method that is used to attach the panels to the exterior wall. Previously, reinforcing within the panels, allowed the installer to screw through the top plate of the wall up into the panel itself. (Figure 1.4) However, this reinforcing proved to be difficult to accommodate in the manufacturing line. This, together with the need for end caps, drastically altered the connection at the eave. Now, instead of shaping the panels to incorporate the desired eave design, the assembly line would produce panels with a standard eave condition. The panels

will therefore no longer be attached to the exterior wall from below, but rather a metal strap would wrap around the end of the panel and connect to the outside of the wall. (Figure 1.12) The eave can then be supplied as a separate prefabricated element which would be attached to the house later. Although this creates a potential problem due to dimensional variations, it simplifies the manufacturing process immensely.

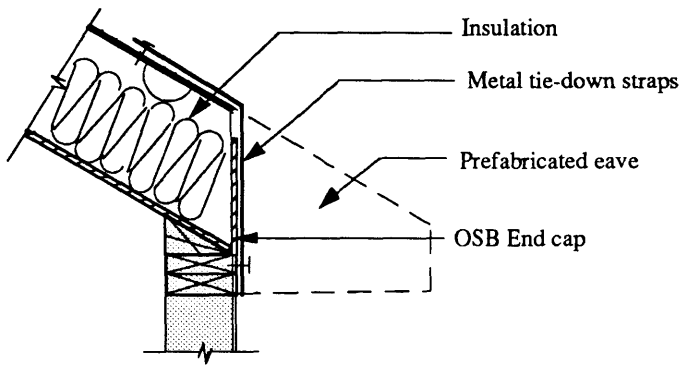

Figure 1.12
Eave Connection after Modifications

Likewise, difficulties associated with manufacturing of the ridge beam have also led to a more intense examination into its design, and because of this a mucn better understanding of its structural behavior has been developed. Chapters 5, 6, and 7 will look closely at the ridge beam's structural performance and discuss the subsequent changes in its design.

Although the actual installation of the roof system on the proof-of-concept house went relatively smoothly, there were still a lot of uncertainties as to how easy this would be in a "real world" situation. As such, the system has been deployed on a house in Pittsburgh, and because of this, several details have been re-examined and modified. These will be discussed in Chapter 3.

Panelization and Its Impact on Structural Strategy

Another important area of understanding that is essential for a complete understanding of the panelized roof system is the impact that panelization, in

general, has on the behavior of a wood frame house. A widely held misconception is that structural panels, both wall and roof, behave in essentially the same way that traditional construction methods do. It may seem that a panelized system can be thought of as nothing more than the separation of an assembly that is normally done in the field, almost like taking a saw to a typical wall or roof and cutting it into 4' wide segments. However, during the separation an important structural attribute is lost. In typical wood frame construction, the sheathing plays a very important role, especially in resisting lateral loads. The sheathing is primarily responsible for a shear wall's resistance to lateral loads (Tuomi, 1977), and roofs and floors that are constructed as diaphragms derive most of their strength from the proper attachment of the sheathing. (APA,1989; UBC, 1991) Furthermore, roofs can benefit from an overall folded plate response when they are properly tied together. (Thorburn, 1960) If the house has been constructed using structural panels, the continuity that enables the sheathing to contribute so much is lost, unless a great deal of attention is paid the panel-to-panel connections.

Before examining the implications that panel use has on the structural behavior of a roof, it is important to first understand a standard residential roof. The behavior of a typical residential roof is, in fact, quite complicated. Competing load paths can develop, depending on the design of the house that can dramatically alter its anticipated behavior. Let us first examine this situation in 2-dimensional terms.

The structure of most roofs can usually be classified as one of four different configurations. (Morse-Fortier,1994) First, the rafters may be placed in such a way that they lean against each other at the top and are supported vertically at the bottom by an exterior wall. In this configuration horizontal thrust develops at the bottom of the rafters. Usually, this thrust is resisted by interior walls or a tie across the space, often floor or ceiling joists. (Figure 1.13)

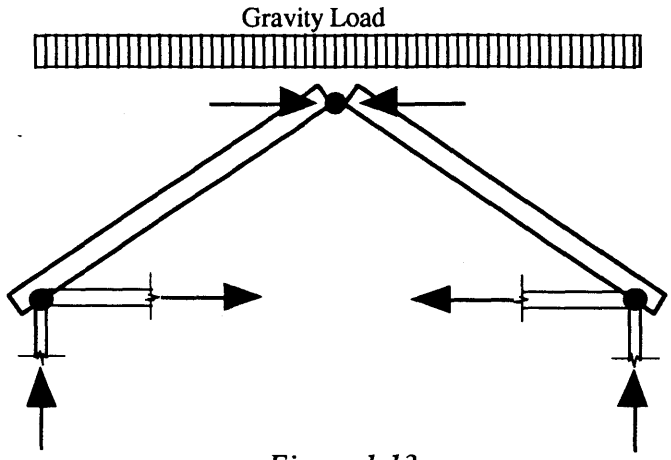

Figure 1.13
Roof Configuration 1: Rafters Leaning on Each Other

The second configuration occurs when the rafters rest against each other at the top, but there is no resistance to the outward thrust at the bottom of the rafters. The exterior walls simply supply vertical support. In this case a collar tie is usually added to resist the horizontal forces. However, by pulling in at the same location where the rafters tend to bend the most due to the gravity loads, this tie actually aggravates the bending in each rafter. (Figure 1.14)

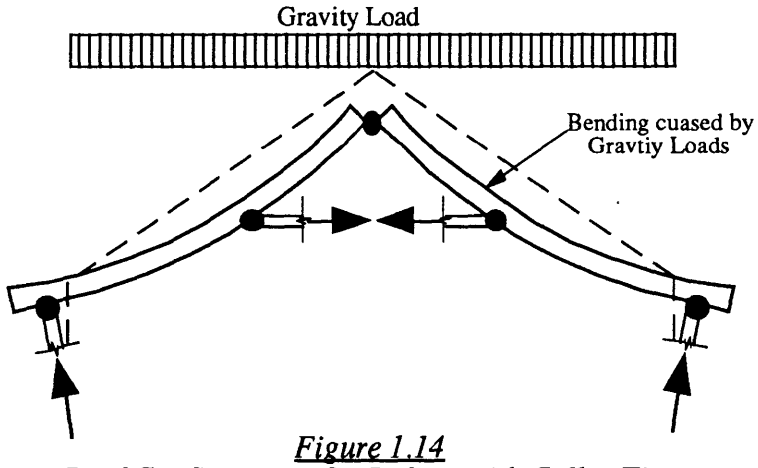

Figure 1.14
Roof Configuration 2: Rafters with Collar Ties

The third configuration is similar to the previous one, except some sort of resistance to the horizontal thrust is provided at the bottom of the rafters. This usually comes in the form of interior walls or floor joists, not necessarily

thought to be part of the structure. However, when this type of support is present, planned or not, the outward thrust at the bottom of the rafters is contained. This causes the collar ties to be in compression, as they resist the rafters' tendency to bend inward, not tension, for which they were probably designed. (Figure 1.15) Although this can be detrimental if the collar ties cannot handle the stress, this configuration reduces the bending moment in the rafters substantially. (Morse-Fortier, 1994)

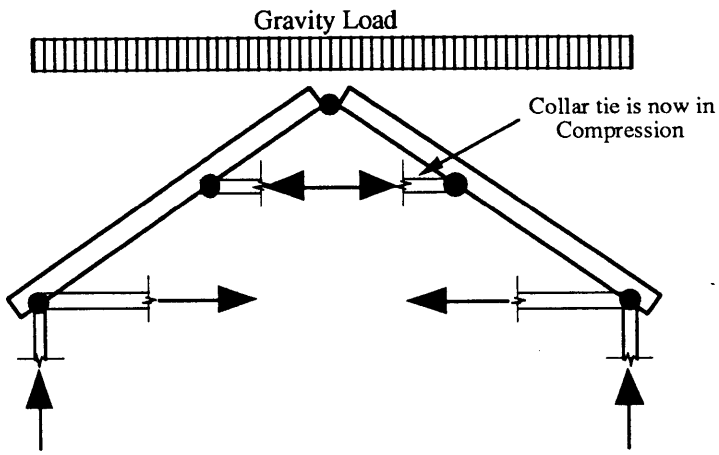

Figure 1.15
Roof Configuration 3: Rafters with Collar Ties and Horizontal Ties

The fourth configuration occurs when a ridge beam has been placed at the top of the roof. Rafters simply span between the ridge beam and the exterior wall. No horizontal thrust develops because a third vertical reaction is supplied by the ridge beam. (Figure 1.16) However, if the ends of the rafters rest against each other at the top, and there is some sort of horizontal support at the exterior wall, this configuration will actually behave like the first one. (Figure 1.13) If this happens, the ridge beam essentially has no structural significance. In order to carry any load, the ridge beam must deflect. When it does, because the rafters are really supporting each other, they end up holding the ridge beam up, keeping it from deflecting under its own load. (Morse-Fortier, 1994)

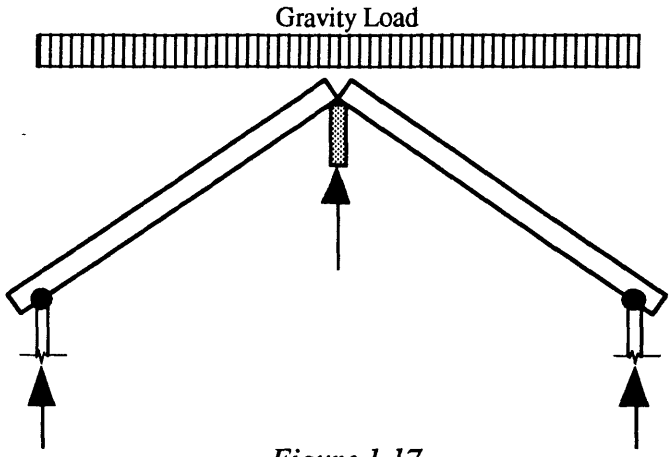

Figure 1.17
Roof Configuration 4: Rafters with a Ridge Beam

When considering roof panels, at least in 2-dimensional terms, all of the previous discussion applies. Structural panels tend to behave similarly to rafters. However, when the third dimension is considered the picture changes dramatically. In traditional roofs, the exterior sheathing ties the entire roof together. The main benefit of this is that the roof acts as a unit, like a folded plate. This form offers a substantial amount strength and stiffness. Figure 1.17 shows how a folded plate tends to deflect when gravity load are applied to it.

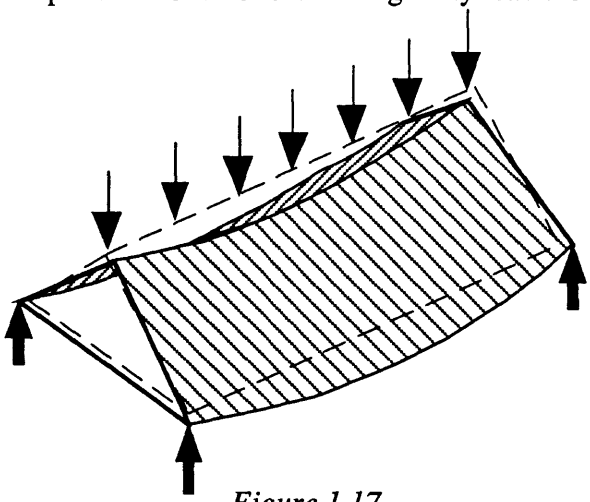

Figure 1.17
3-D Folded Plate Action of a Roof

The same effect is also apparent when lateral loads are applied. Typically, one of the most important structural roles that a roof plays is to act as a diaphragm.

In doing so, the roof transfers the lateral loads caused by wind or earthquakes to the shear walls at either end of it. In order to do this, it must act as one unit, bending as the loads are applied. (Figure 1.18) However, if the roof is constructed with panels, the continuity required to do this is lost. As a result, when a lateral loads is applied, the panels tend to slide past one another. (Figure 1.19) This places a significant amount of stress on the panel-to-panel connection.

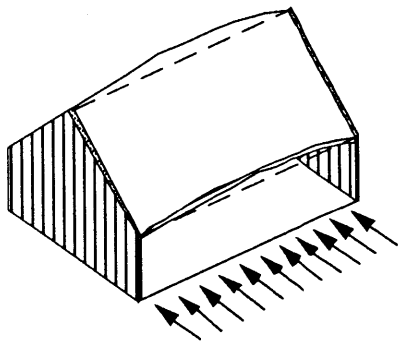

Figure 1.18
Diaphragm Action of a Typical Roof

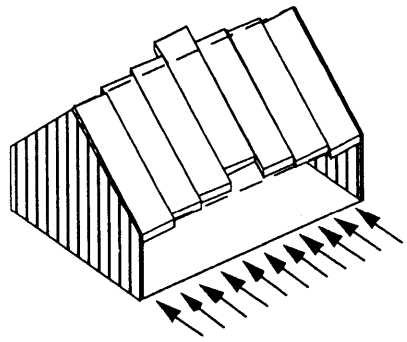

Figure 1.19
Panels Compromise Diaphragm Action

The continuity required for proper diaphragm action is not simply a by-product of using plywood or oriented strand board sheathing. Careful attention is paid to the way the sheathing is connected to the rafters and the way it is laid out. Typically, roof sheathing is tied together by staggering the plywood or OSB sheets and creating a continuous perimeter chord all the way around the roof. (Figure 1.20)

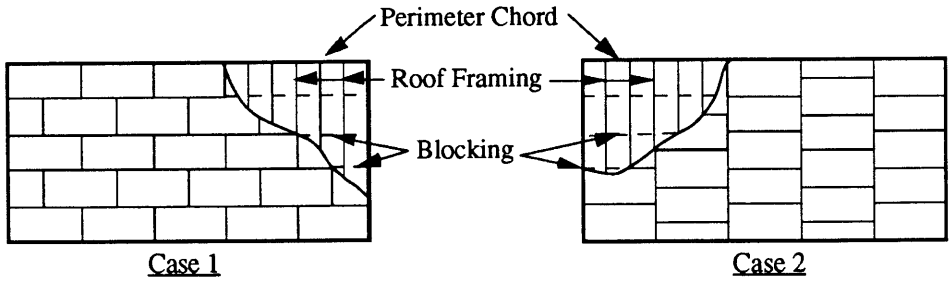

Figure 1.20
Reccommended Diaphragm Layouts (APA, 1989)

An alternative to this, one that is especially appropriate for use with roof panels, is to transfer to the force in the roof directly to another member, like a ridge beam. This member can then carry the force from the panels to the shear walls. In this way, the diaphragm action discussed previously is not required. Instead, the roof panels can simply transfer their portion of the lateral load directly to the ridge beam, which in turn, transfers it to the supporting shear walls. (Figure 1.22) This is the *primary* function of the ridge beam in this system, and as such it has been designed to actually be stiffer and stronger with respect to lateral loads than with respect to vertical loads.

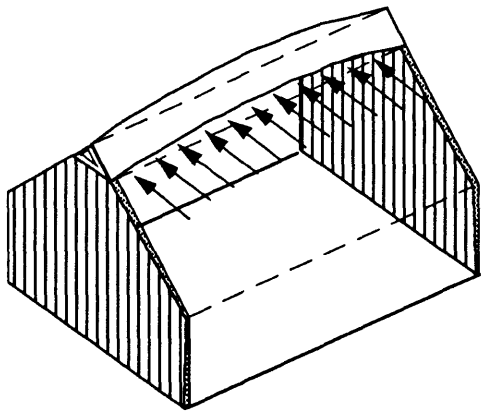

Figure 1.21
The Ridge Beam Transfers Lateral Loads to Shear Walls

Chap. 2 *Openings in the Roof Panels*

Definition of the Problem

During the evolution of the roof panel system, a troublesome irony began to develop. The system was intended to create habitable attic space, one of the things lost when wood trusses are used. Yet because the attic space can be utilized as living space, it should have provisions for an ample amount of natural light and ventilation. Usually this would be accomplished with windows in the gable end of the house, dormers, and roof windows. However, with this roof system it is not so easy. Windows in the gable end do not pose a problem, as long as proper support for the ridge beam is provided. Dormers, however, because of their size and weight need to be constructed so that their walls can transfer the weight of the dormer roof to the floor below. (Figure 2.1) Roof windows also pose a potential difficulty. Obviously roof windows need to be supported by the roof itself. (Figure 2.2) This presented the first challenge that has been undertaken in this thesis, and although it is practical and relatively mundane, it has provided an opportunity to better understand the way the roof panels behave structurally.

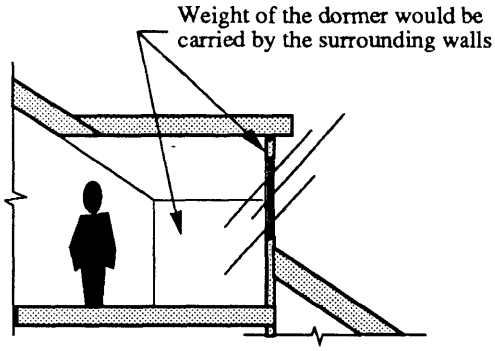

Figure 2.1
Dormer in a Panelized Roof

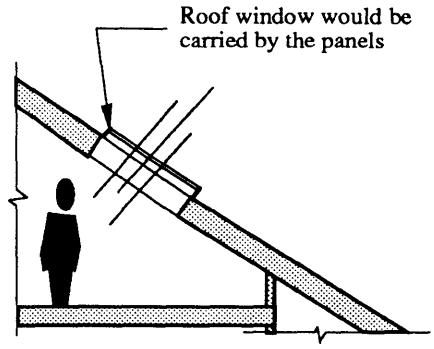

Figure 2.1
Roof Window in a Panelized Roof

As explained previously, the structural efficiency of the roof panels comes from the fact that the loads are carried in the skins, rather than in the ribs. Therefore, the removal of any portion of that skin for a roof window becomes problematic. This is further compounded by the fact that it is common practice for a homeowner to install skylights or roof windows years after the construction of the home is complete.

Analysis of a Typical Panel

The first step in tackling this problem was to fully understand the behavior of a typical roof panel. To do this, four performance criteria were examined:

1) Shear in the ribs and at the glue joints
2) Compression or tension in the skins
3) Deflection under live loads (limited to l/360)
4) Deflection under all loads (limited to l/240)

The panels have been designed as standard components. Each panel, regardless of its span, will have the same composition. (Figure 1.2) Because of this, the limiting criteria for the design of the panels will vary with the span. For example, a relatively short panel may fail due to excessive shear, while a long panel may simply deflect too much. Figure 2.3 shows the allowable live loads

based on the criteria listed above for panels installed on houses with a variety of widths.

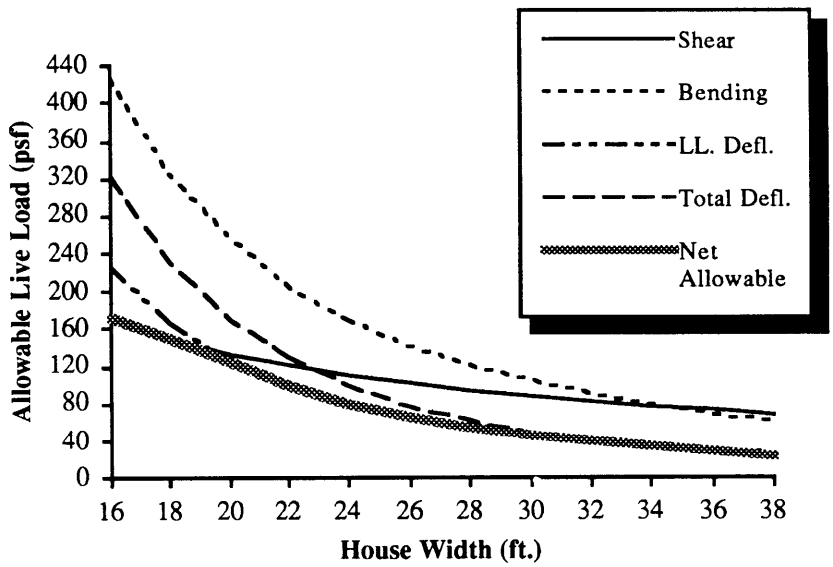

Figure 2.3
Allowable Live Loads for Typical Roof Panels (10:12 slope)

This graph shows the allowable live loads for each of the criteria listed above. A simple transformation of one the following classic equations was used for each criteria:

1) For shear:

$$f_v = \frac{V_{max} Q}{I_x\, b} \leq F_v \qquad (2.1)$$

2) For axial stress due to bending:

$$f_b = \frac{M_{max}\, c}{I_x} \leq F_b \qquad (2.2)$$

3) For deflection under live loads (limited to l/360):

$$\Delta = \left[\frac{5(LL)l^4}{384EI} + \frac{3(LL)l^2}{20AG}\right]1.75 \leq l/360 \qquad (2.3)$$

4) For deflection under the total gravity load (limited to l/240):

$$\Delta = \left[\frac{5wl^4}{384EI} + \frac{3wl^2}{20AG}\right]1.75 \leq l/360 \qquad (2.3a)$$

where *LL* is the live load, *w* is the total gravity load per unit length, *l* is the span of the panel (see Figure 2.4), *G* is the modulus of rigidity for OSB, and *1.75* is the load duration factor. A spreadsheet, prepared with Microsoft® Excel, 3.0, automatically carried out these calculations and prepared a table. With this table, a reader can quickly check a particular house width to make sure that the actual loads on the roof do not exceed the allowable live load that the panels can carry. (Appendix B is a printout of this spreadsheet)

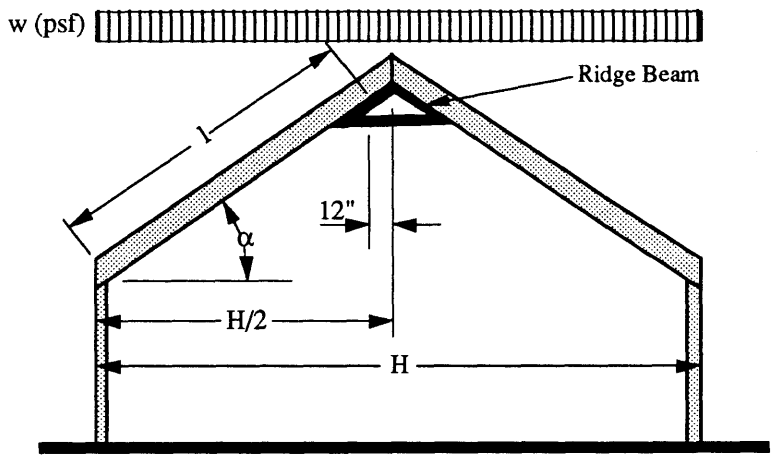

Figure 2.4
Variables for the Calculation of the Maximum House Widths

The Strategy for Accommodating Roof Windows

Because stressed skin panels rely on their faces to carry loads, large holes cannot be cut in the OSB without reducing the panels load carrying capability. Therefore, when openings are required in the panels, another way to carry the load must be developed. The strategy that has been adopted for the roof system is to simply replace the material that is removed in the faces with another material that can be kept out of the way. Although many materials were

discussed, standard or high strength wood 2x's were quickly deemed to be the most appropriate, largely due to their availability and ease of use. The wood 2x's would be attached to each OSB face on the inside of the panel, on either side of the opening. (Figures 2.5 and 2.6) To attach them, wood screws will be used because, although glue would provide a stronger connection, a good bond would be difficult to achieve after the panels are in place.

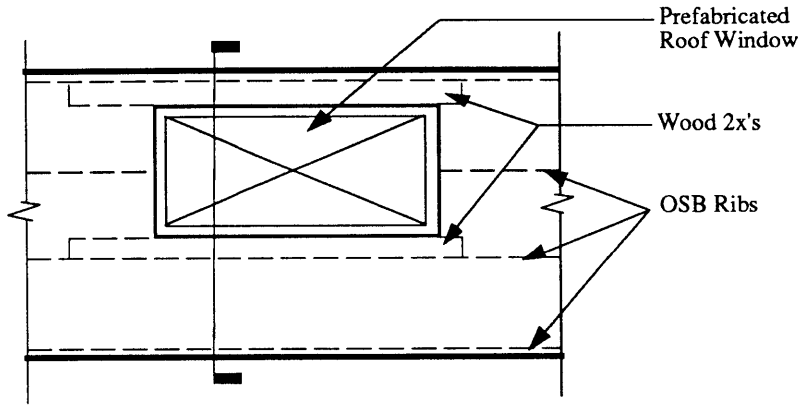

Figure 2.5
Plan of a Panel with a Roof Window

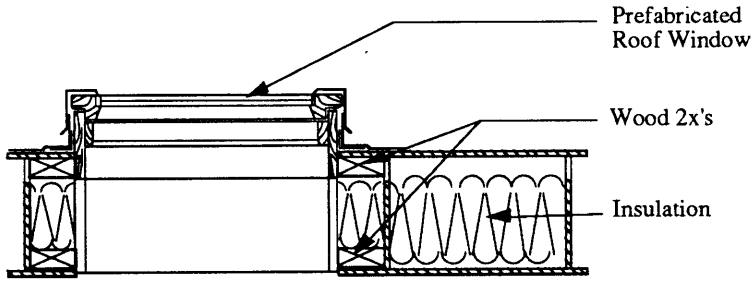

Figure 2.6
Section through a Panel with a Roof Window

The size of these members is a function of strength and the load that they will carry. Because the 2x's are stiffer than the OSB they are replacing, they carry more load. Therefore, the sizing of these members requires a good understanding of how much load they will actually carry. Furthermore, because deflection is the governing criteria at most spans, the wood 2x's must add enough stiffness to the panel to make up for the material removed in both the skins and the ribs.

Since all of these issues are interrelated, a spreadsheet, similar to the one described previously, was created to help determine the optimum size and strength of the 2x's. Again, the spreadsheet was set up to calculate the allowable loads for a roof panel, this time one with an opening in it. However, the spreadsheet now had to consider two additional performance criteria:

5) Compressive crushing in the wood 2x's
6) Tensile failure in the wood 2x's

Because materials of different stiffnesses are being used, Young's Modulus, *E*, for each material was incorporated into all of the equations. (2.1-2.3) With this spreadsheet, a variety of opening sizes, wood strengths, and sizes of 2x's were examined, and for each combination, the allowable live loads for each of the six criteria were determined. The graphs were then compared to that of a typical panel. Figure 2.7 shows an example of one of these graphs. (Appendix C provides an example of this spreadsheet)

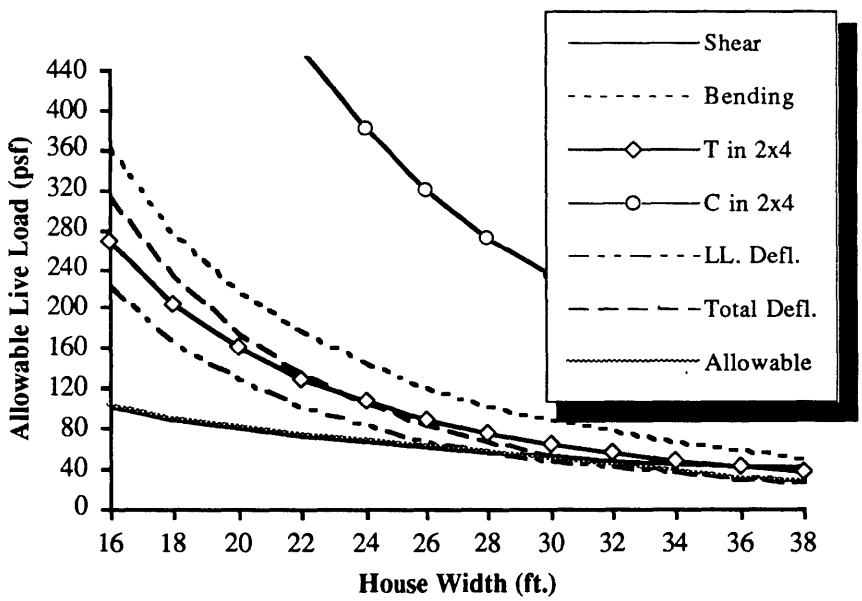

Figure 2.7
Allowable Live Loads for Panels with Openings (10:12 slope)

The goal of this investigation was to find the smallest, most widely available wood reinforcement that could be used with typical roof windows, and would provide approximately the same behavior as a panel with no openings. The results showed that 2x4 members with a stiffness of at least 1,200,000 psi should be used on each side of the opening. With the configuration shown in Figure 2.6, this limits the width of an opening to 36", which will easily accommodate standard roof windows of 22" and 31". (Bristolite, 1991; Velux, 1992; Wasco, 1991)

Development Length and Fastener Spacing

The next issue was how to get the force into the 2x4's. As mentioned, wood screws will be utilized to connect the 2x4's to the OSB, and therefore, their strength and spacing will be critical to the structural integrity of the panel. This requires a careful examination of development length and the shear capacity of the screws.

Because loads are carried in the skins of the roof panels, when part of the skin is removed, the force in that portion of the OSB must be transferred into the wood 2x4's, around the opening and back into the OSB. However, this force cannot be transferred abruptly. The distance required to ensure that the appropriate amount of force can be transferred into the wood is the development length. In the panels, the development length is a function of screw strength. Each screw can transfer from 66 to 467 pounds, depending on the screw and type of wood that is being used. (NDS, 1991) The development length can be calculated by dividing the force that needs to be transferred, T (it could also be C), by the strength of the screws, s, and multiplying that by the minimum spacing between screws, sp_{min}:

$$ld = \frac{T}{s * 0.7} * sp_{min} * 1.5 \qquad (2.4)$$

where *1.5* is a load duration factor and *0.7* is the temperature factor (for temperatures above 125°F). The screws should be placed as shown in Figure 2.8. (NDS, 1991)

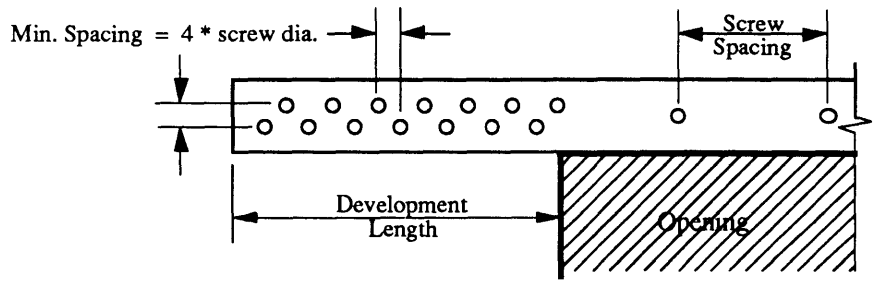

Figure 2.8
Screw Placement at a Roof Opening

This attachment is complicated by the fact that the force transferred into the wood 2x4's, *T* or *C*, is a function of the bending moment at the location of the opening. The moment, *M*, acting on a uniformly loaded panel at a distance, *x*, from the nearest support is:

$$M = \frac{wx^2}{2} \qquad (2.5)$$

Shear and moment diagrams for a uniformly loaded panel (Figure 2.9) clearly indicate that at midspan, the force that is transferred is at its highest, while at near the ends of the panel there is almost no force that needs to be transferred. Consequently, the development length will vary with the location of the opening.

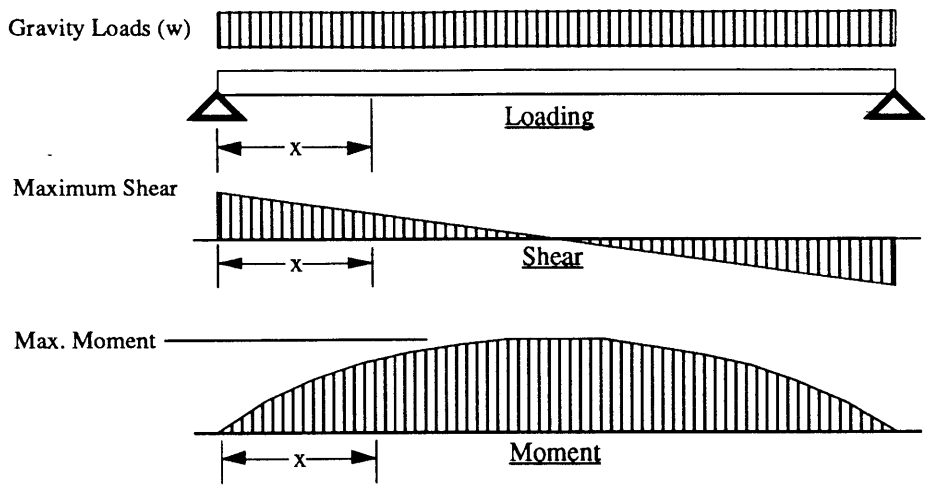

Figure 2.9
Typical Shear and Moment Diagrams for the Panels

If the distance, x, from the nearest support to the opening is known, the force in the 2x4's can be calculated by summing the stress, My/I, over the incremental areas within the 2x4's, dA:

$$T = \int \frac{My}{I_{msr}} dA \qquad (2.6)$$

With this, the development length can be calculated using Equation (2.4).

Another concern with this method of reinforcement is that shear stress develops between the OSB and the 2x4's, and it must also be resisted by the screws that attach the 2x4's to the OSB. To calculate the required spacing of the screws along the edge of the opening, the shear must be quantified. Unfortunately, like the bending moment, shear also varies along length of the panel. The shear, V, at a distance, x, from the nearest support is simply:

$$V = \frac{w(l-x)}{2} \qquad (2.7)$$

which is derived from the free body diagram at x. (Figure 2.10)

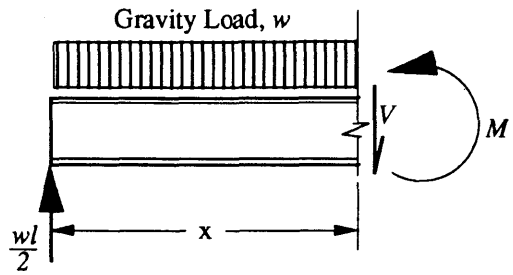

Figure 2.10
Free Body Diagram of a Portion of a Panel

The shear in the joints, V', can then be calculated by using the formula:

$$V' = \frac{VE_{osb}Q}{EI} \qquad (2.8)$$

The spacing of the screws, *sp*, can be calculated by simply dividing the strength of the screws, *s*, by the shear in the joints, V'. Again, factors for load duration and temperature have been included in the equation:

$$sp = \frac{s*0.7}{V'*1.5} \qquad (2.9)$$

Because of the variations in development length and screw spacing, no simple rule of thumb for the attachment of the wood 2x4's could be developed. Instead, a spreadsheet was created that can deal with all of the variations. It calculates the required development length and the screw spacing along the edge of the opening for different locations along the length of the panel, given a particular span, slope, and snow load. A series of tables has been prepared to show these values. Table 2.1 is an example.

Panel Span (ft): 20 Slope 7 :12 Snow Load: 30 psf

Distance (x):	1	2	3	4	5	6	7	8	9	10
Screw Spacing	1.47	1.65	1.88	2.20	2.64	3.30	4.40	6.60	13.19	-
Dev. Length	0.35	1.40	3.14	5.59	8.73	12.57	17.10	22.34	28.28	34.91

Table 2.1
Example Table for Development Lengths and Screw Spacing

Obviously, there are many variables associated with these calculations. To safely install his own roof window, the typical homeowner would need access to a number of tables, like Table 2.1. A booklet of tables, similar to the span tables provided for wood joists, could be provided with the purchase of the roof window or with the roof system. Either way, this information would be absolutely essential to ensure that openings are properly placed and reinforced. (Appendix D is a possible example of a few pages from such a booklet)

In-Depth Analysis of a Panel with an Opening

After the appropriate transfer of stress into and out of the 2x4's was assured, it was important to again examine the panel as a whole. One of the concerns associated with cutting a hole in a roof panel was that a local weak spot might be created where the opening is located. This would create a "hinge" in the panel, similar to the way a notch in the bottom of a beam does. (Figure 2.11)

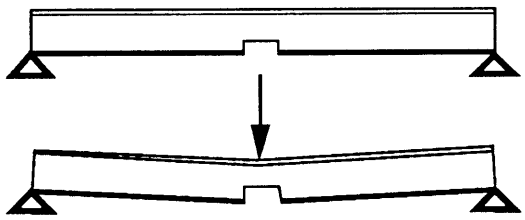

Figure 2.11
A Local Weak Point Caused by Notching a Typical Beam

To check for this, the method of virtual work was employed. (Chajes, 1990) (Figure 2.12)

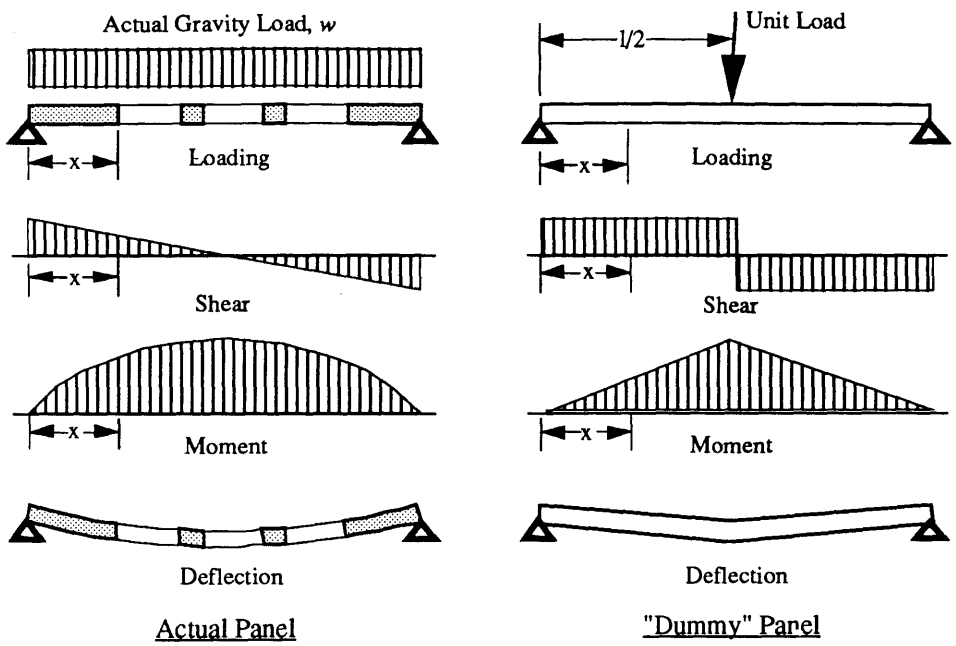

Figure 2.12
Method of Virtual Work for the Roof Pamels

Accounting for different material stiffnesses, the deflection induced by bending, Δ_b, at a distance, x, from the nearest support , can be calculated with the following equation:

$$\Delta_b = \int \frac{Mm}{EI_p} dx + \int \frac{Mm}{EI_o} dx + \ldots \qquad (2.10)$$

where EI_p and EI_o are the stiffnesses of the full panel and the panel at the opening, respectively; m is the internal moment caused by the unit load:

$$m = \frac{x}{2} \qquad (2.11)$$

and M is the external bending moment acting on the panel at x, given by:

$$M = \frac{w}{2}(lx - x^2) \qquad (2.12)$$

which is again derived from the free body diagram. (Figure 2.10)

To test Equation (2.10), it was applied to a panel with no openings. The result of this was the classic formula for deflection due to bending:

$$\Delta_b = \frac{5wl^4}{384EI} \tag{2.13}$$

Deflection due to shear was also accounted for. In the roof panels, essentially the only resistance to this type of behavior is the OSB ribs. Consequently, if a large opening or several openings are placed in one panel, it would lose a considerable amount of resistance to shear deflection.

To investigate this, the method of least work was again employed. The shear deflection, Δ_v, becomes:

$$\Delta_v = \int \frac{Vv}{AG_p} dx + \int \frac{Vv}{AG_o} dx + \ldots \tag{2.14}$$

where AG_p and AG_o are the shear stiffness for the full panel and the panel at an opening, respectively; v is the internal shear force caused by the unit load, which in this case is 1/2, and V is the external shear force at x, given by Equation (2.7)

Again, to test Equation 2.14 a panel with no openings was analyzed, and the classic equation for shear deflection resulted:

$$\Delta_v = \frac{3wl^2}{20AG} \tag{2.15}$$

A spreadsheet that uses the method of virtual work was created to calculate the deflection due to bending and shear, and the resulting allowable live loads, development lengths, and screw spacings for a variety of configurations of openings within a single panel. (Appendix E) These calculations demonstrated that because the OSB that is removed for an openings is less stiff than the material that is used to replace it, the local weak spot that was a concern originally is actually a stiff place. Consequently, the amount of deflection in the roof panels actually decreases as the number and the size of openings increases.

With this investigation, an effective method has been developed to accommodate openings within the panels. Because of the rib placement, openings should be no wider than 36", but the placement along the length of the panel is up to the the designer. This examination has shown that proper reinforcement around the opening will be absolutely critical to the panels' structural integrity. For the retrofitted skylights and roof windows, communicating this effectively to a typical homeowner will be one of the most important challenges the system faces.

Chap. 3 *The IBACoS Lab House*

Background and Description

After developing a good understanding of the roof panels and how to cut openings in them, our attention will now focus on a real world application of the roof system. As mentioned in Chapter 1, a proof-of-concept structure had been built previously, but no finishes were applied, and no consideration to the thermal performance of the roof was given. A fully enclosed, finished application had yet to be done.

In 1993, Integrated Building and Construction Systems (IBACoS), which is a consortium made up of several of the industry's leaders, including GE Plastics, USG, Owens Corning, MASCO, and the Ryland Group, stepped forward and provided the IHTCP with an opportunity to install the system on part of a finished house. IBACoS was formed to promote technical innovation within an industry that has very little money for research and development, and to pursue this, it was planning to build two houses in a suburb of Pittsburgh, PA. Each house would be the same model (Figure 3.1 & 3.2), but one would be built

using traditional methods, while the other would incorporate new technologies. The houses would then be compared and used as models.

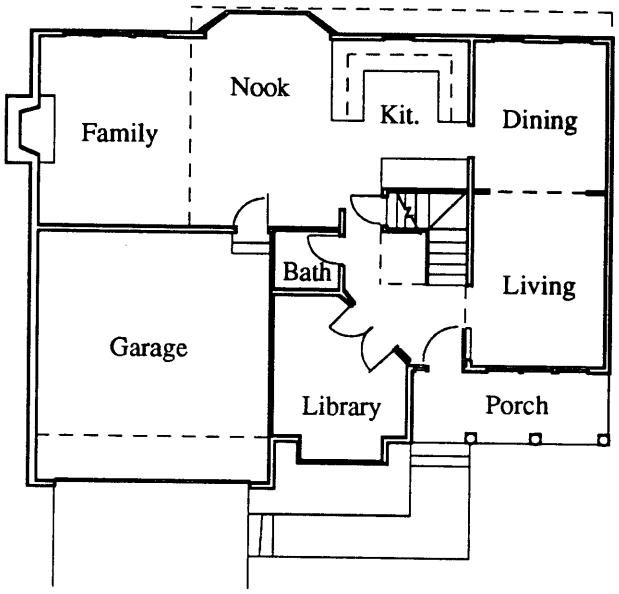

Figure 3.1
First Floor Plan of the IBACoS Lab House

Figure 3.2
Front Elevation of the IBACoS Lab House

Each house was located on the edge of a steep ravine, so a walkout basement could be provided in the back. Behind the garage and overlooking the ravine is the family room. In one house, the roof over the family room was constructed with trusses. In the other house, the panelized roof system was used. Because

of this, a small loft could be added above the garage and overlooking the family room, and to bring natural light into it, two skylights were located above. (Figure 3.3)

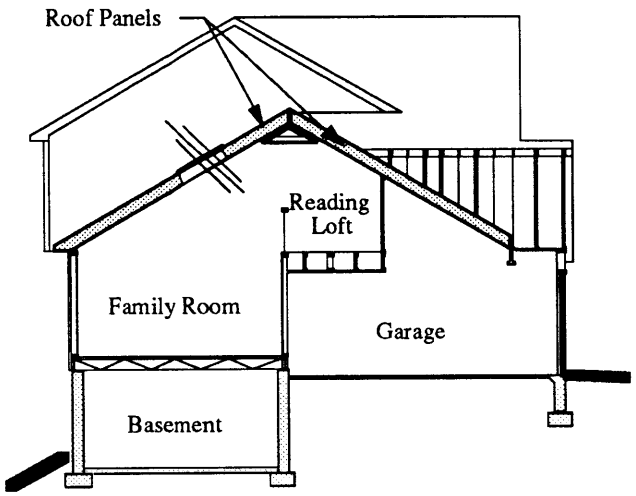

Figure 3.3
Section through the Family Room and Garage

For the panelized roof system, this provided an interesting challenge. The dimensions of the roof were 34'-0" by 13'-0". Panels would span in the long direction and be supported by a relatively short ridge beam. (Figure 3.4)

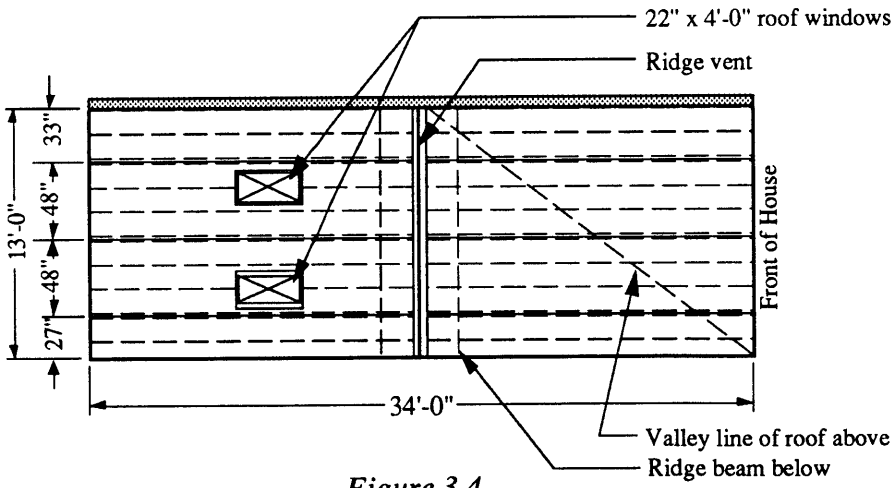

Figure 3.4
Partial Roof Plan of the IBACoS Lab House

The challenge came from the need to *fit* the roof system into the rest of the house, which was not originally designed to be constructed with the roof system. First the dimensions of the roof obviously did not fit within the 4'-0" module. Therefore, the roof had to be built with eight panels, four of which were narrower than the typical 4'-0". Second, the roof system had to fit tightly against a taller two story wall on one edge and be flush with the supporting wall at the other edge. (Figure 3.5)

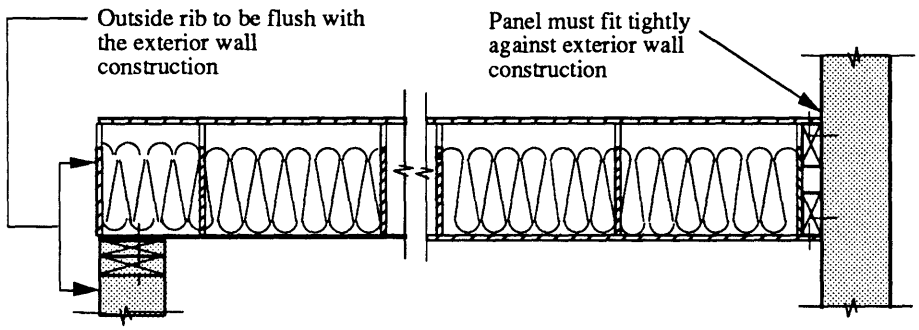

Figure 3.5
Lack of Dimensional Tolerance in the IBACoS Lab House

The third difficulty associated with this installation came from the differing eave conditions. In the back of the house, the eave was to match the rest of the house, which was built with roof trusses, but instead of providing a pre-assembled unit and attaching it after the panels were in place, the panels had to be cut during manufacturing to form the appropriate condition . In the front, the panels would fit tightly against a truss that was spanning across the garage in the other direction. (Figure 3.6) This created a situation where the panels on each side of the house had different eave conditions, neither of which provided much room for dimensional tolerance.

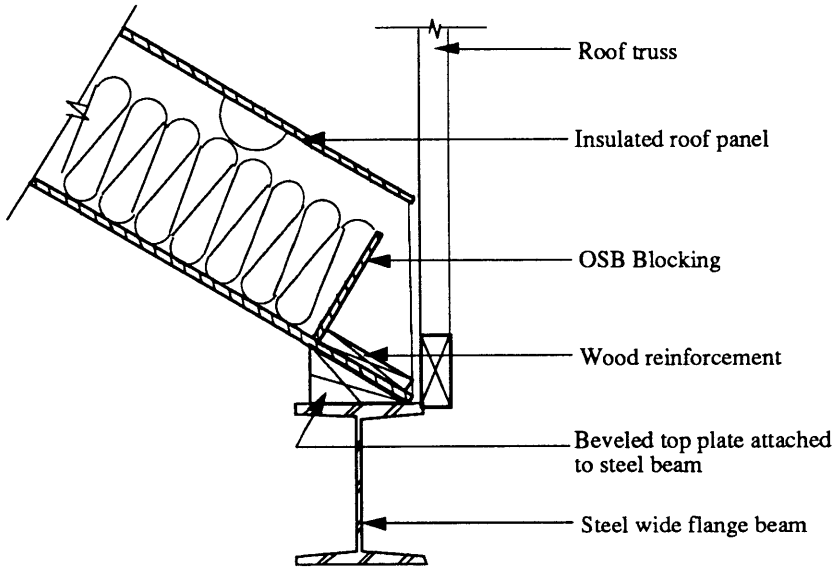

Figure 3.6
Eave Condition for the Front Panels

The Manufacturing Process

The panels were manufactured by hand in a facility provided by Wood Structures, Inc, in Biddeford, ME. They were assembled using jigs that were developed during the construction of the proof-of-concept structure. However, because of the varying widths, the differing eave conditions, the rake condition on the outside wall, and the skylights, only two panels were the same. All the others were unique. This created many problems during the manufacturing process, both in setup and assembly. (Appendix F provides a set of manufacturing drawings for the panels)

The ridge beam was also manufactured at the same location. A detailed discussion of the design of the ridge beam will be presented in Chapters 5-7. However, a couple of points specific to this application are worth mentioning. First, the roof slope of the IBACoS house was 7:12, much lower than would be recommended for roof system. Although this slope is not detrimental to the interior spaces, as can be seen in Figure 3.3, it reduced the structural depth of the

ridge beam substantially. (Figure 3.7) Fortunately, the span of the ridge beam was short enough that its capacity was still high enough to carry the loads from the roof panels.

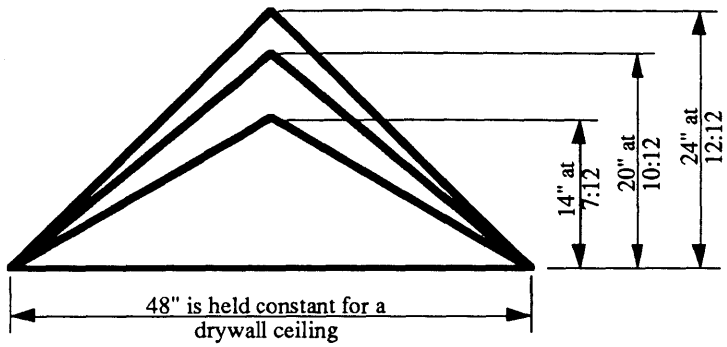

Figure 3.7
Roof Slope's Effect on the Structural Depth of the Ridge Beam

The other noteworthy aspect of this ridge beam is that it was designed to be 2" shorter than the full "out-to-out" dimension provided by the supporting walls. This provided sufficient bearing surface for the ridge beam while allowing plenty of room for dimensional variations in the placement of the beam This should be standard practice in the future. (Appendix G is a full set of ridge beam drawings)

The final components of the system, the splines, were manufactured by first making a sandwich panel with OSB faces, rigid polyurethane foam insulation, and 2" of compressible foam. The splines were created by slicing the panel into 3" wide segments. Although this sounds simple, because of the depth of the panel, this proved to be extremely difficult. First, a cut was made with a circular saw on each face, then it was finished with a hand saw. During this process the compressible foam rubber proved to be too flexible to withstand the stress. As a result, many of the splines had to be pieced back together after they were cut, and consequently, the precision left a lot to be desired. (Appendix H shows a manufacturing drawing for the splines)

Delivery and Installation

After all of the components of the roof system had been manufactured, they were stored in a warehouse until IBACoS was ready for delivery. When the exterior framing was ready to accept the roof, the system was loaded onto a flatbed truck with a forklift and shipped from Biddeford to Pittsburgh. When they arrived at the site, the panels, the ridge beam, and the splines were unloaded by hand and stored on-site.

Throughout this procedure, which was a typical delivery sequence, there were many opportunities for damage to each of the components. Oriented strand board is very susceptible to water damage. Consequently, special care had to be taken at all times to protect the system from moisture. Furthermore, the OSB is also susceptible to damage from edge impact. At the IBACoS House, this lack of durability affected the system. Even though they had been sufficiently protected from moisture, by the time the panels arrived at the site, they had sustained several dents along the edges. Although this did not affect the structural performance of the system, it made the installation very difficult.

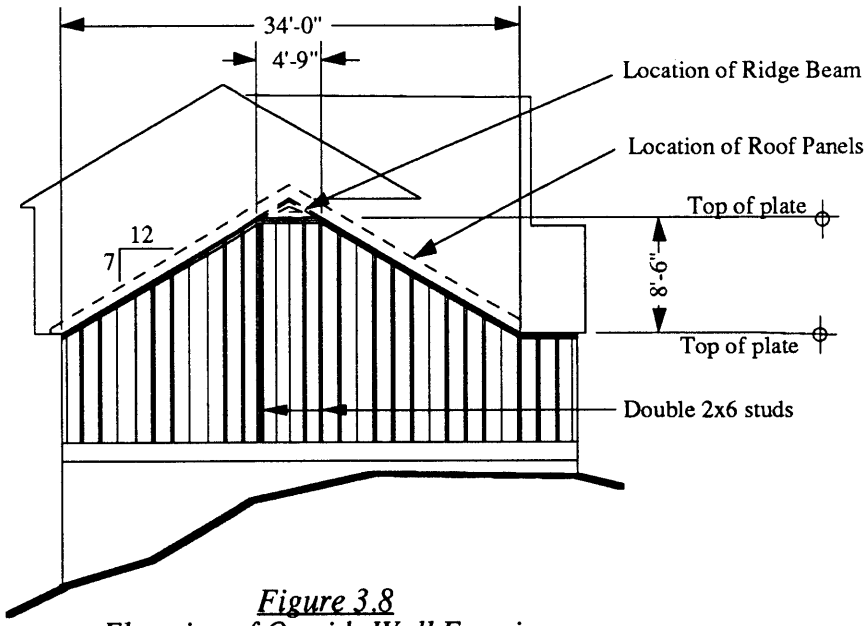

Figure 3.8
Elevation of Outside Wall Framing

When the crew was ready to install the system (Figure 3.8), a crane was ordered to the site so that all of the components could be lifted into place. The positioning of the crane proved to be somewhat difficult because of the dramatic slope of the site. It had to be located in front of the house, where it had to lift the panels over a portion of the roof which had already been erected and on to the back of the house. The first item that was lifted up to the roof was the ridge beam. It was lifted into place and screwed into the wall framing. Next, the panels were lifted one by one. To help in this process, short rope loops had been attached to each corner of the panels through holes in the ribs. A harness, which had been designed so that the panels would fly at the appropriate angle, could then be clipped to these loops and attached to the crane. (Figure 3.9)

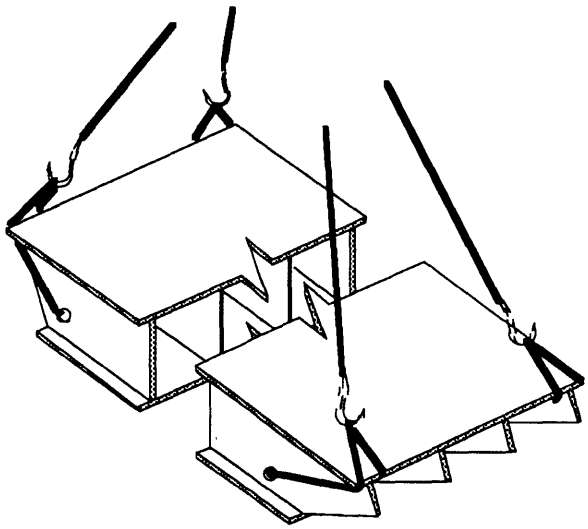

Figure 3.9
Attachment of the Panels to the Lifting Harness

As the panels were lifted, a crew member on the ground used a rope to guide them to the correct location. Once there, the panels were set down on the ridge beam, engaging the ledgers on the bottom of the panels. (Figure 3.10)

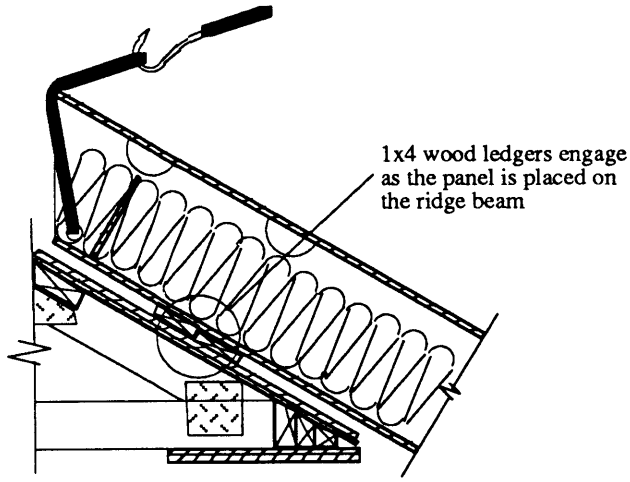

Figure 3.10
Panels Interlock with the Ridge Beam

Each panel was then pushed along the ridge beam to its final location. The first panel was placed against the tall two story wall, where a pair of 1x4's had previously been attached. The panel was fastened to the 1x4's with drywall screws. (Figure 3.11)

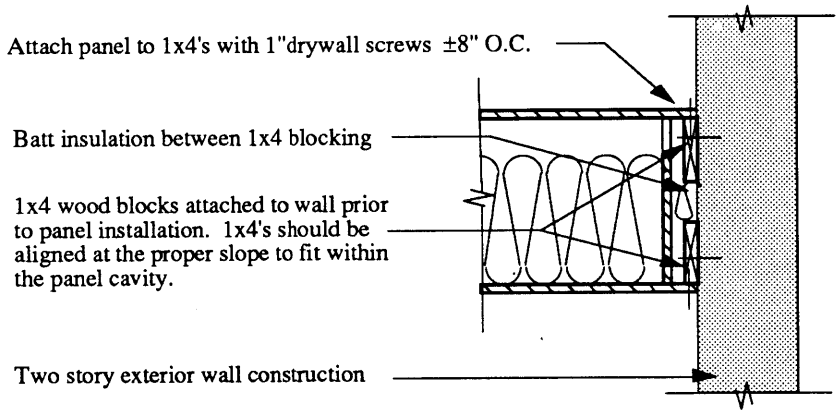

Figure 3.11
Construction Detail at Two Story Wall

The next panel was then lifted into place with one spline already attached. This procedure differed from that used to construct the proof-of-concept structure, but because of the site conditions, there was virtually no access to the eave. (Figure 3.8) Therefore, the splines could not be slipped up into the cavity created by two panels, as described in Chapter 1. Instead, each spline was

attached to a panel while it was on the ground, and the panel and the spline, were lifted up to the roof and slid into position. (Figure 3.12)

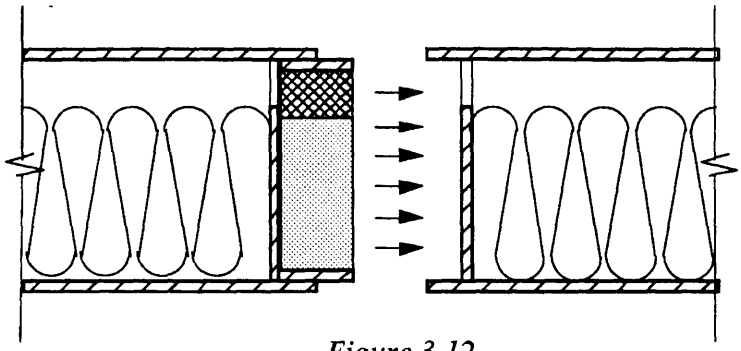

Figure 3.12
Spline Engagement

Although this sounds straight forward, it proved to be the most difficult part of the installation. Because of the imperfections in both the panels and the splines, and the dents sustained during storage and delivery, *none* of the splines engaged the other panel easily. In each case, crew members both on the roof and inside the house had to force the splines into place.

Another difficulty, one that was identified previously, was the lack of dimensional tolerance. The panel-to-panel connection had been designed to provide a gap of approximately 1/8" between panel faces. This assured a tight fit within the spline cavity, an important consideration when trying to prevent heat flow through this joint. (Figure 3.13)

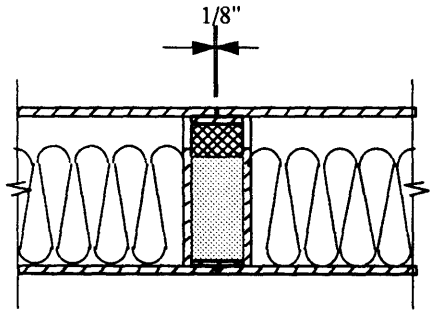

Figure 3.13
Tightly Fitting Splines

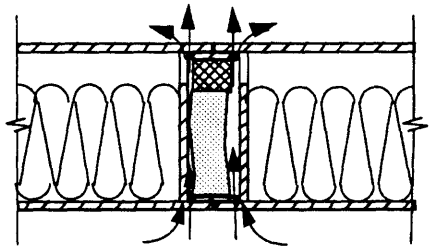

Figure 3.14
Heat Loss through Ill-Fitting Splines

However, because of imperfections in both the panels and the splines, this gap ended up being larger than 1/8". Therefore, by the time the last panel on each side of the roof was placed, there was an overhang of approximately 1/2" at the exterior wall. To correct this, two panels were removed and both the splines and the panels were trimmed to fit. However, because this operation was performed in the field with a reciprocating saw, it was not conducted with much precision. The anticipated result is that a certain amount of heat loss will occur through these connections. (Figure 3.14)

Another difficulty encountered at the IBACoS House was in fastening the splines to the roof panels. Because of the lack of interior construction at the time of the installation, it was quite difficult to even reach the panels from the inside to fasten the splines. Therefore this was performed later. From the outside, coarsely threaded drywall screws were used to fasten through the panels into the splines. These screws were intended to pull up on the splines so that they fit snugly against the top face of the panels, eliminating gaps within the connection. However, because of the composition of OSB, it did not provide enough "bite" to really pull the splines up. In several instances screws were over-tightened, stripping the OSB and nullifying the screw's ability to pull up on the spline.

Solutions to the Installation Problems

Many of the problems that have been discussed relate to the robustness of the system. The first, OSB's susceptibility to water damage is an issue that the manufacturers have been examining for some time now. However, short of changing materials entirely, this is not an issue that the IHCTP can address effectively. Meanwhile, special care must always be taken to protect the system from moisture.

The second problem, the panels' susceptibility to damage from side impact, can be addressed by simply adding some type of reinforcement to the edges of the

panels. This could be accomplished with wood 1x2's or metal channels. (Figures 3.15)

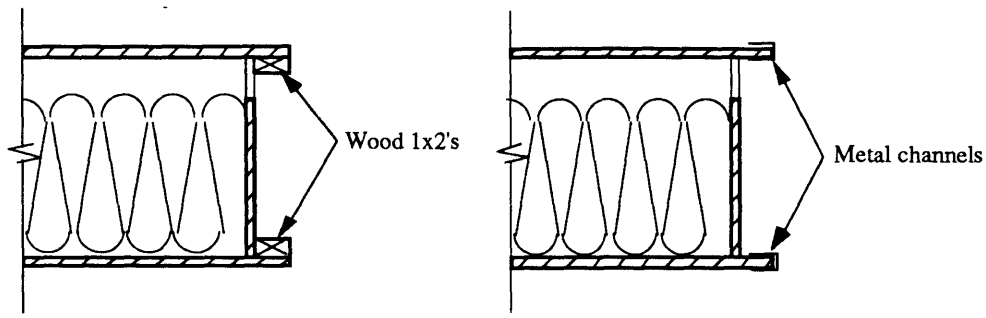

Figure 3.15
Options for Edge Reinforcement on the Panels

Like the panels, the splines lacked adequate robustness. The excessive flexibility of the compressible foam caused problems during manufacturing, shipping, and installation. Correcting this is a matter of material selection. Care needs to be taken to select an appropriate compressible material that is compatible with both the rigid foam and the face material. Many possible alternatives exist, and more investigation is needed into which of these might be the best.

Another problem associated with the splines was their engagement with the panels. As mentioned before, the splines were attached to one of the panels while it was still on the ground, then lifted into place. This will generally be the most effective procedure, especially when difficult site conditions are encountered. However, when the panels are pushed against each other, the splines should easily engage the neighboring panel. At the IBACoS House, the splines caught on the edges of the panels. Part of this can be attributed to the dents along the edges of the panels. However, a large improvement will come from beveling the faces of the splines to eliminate the sharp corners that were catching on the panels. (Figure 3.16)

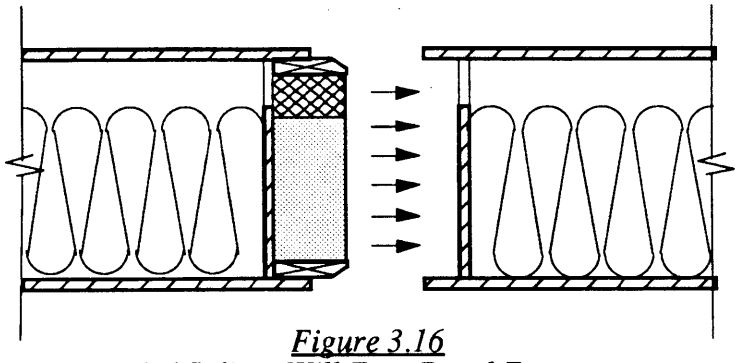

Figure 3.16
Beveled Splines Will Ease Panel Engagement

Also related to the splines, was the inability of the OSB to pull them tightly to the faces of the panels. (Figure 3.17) This was attributed to the material's lack of "bite", and again it is simply a matter of material choice. Although OSB is inexpensive and very effective in the panels, it is not well suited for the splines. The use of standard 1x4's would provide substantially more "bite" for the screws, and it would increase the robustness of the spline itself. (Figure 3.18)

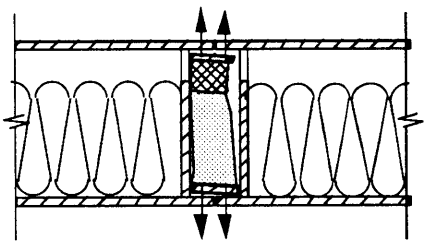

Figure 3.17
Lack of "Bite" Prevents Snuggly Fitting Splines

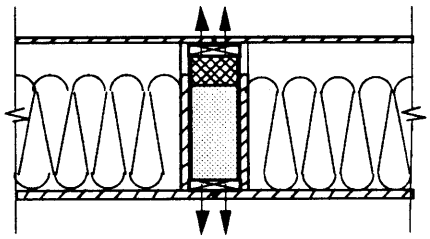

Figure 3.18
Wood 1x4's Would Add Considerable "Bite"

The last problem that relates, in part, to the splines is the lack of dimensional tolerance in the design of the house. As mentioned before, the system butted against a tall wall on one side and was intended to be flush at the other. (Figure 3.5) This was nearly impossible for the roof system because it had to fit *tightly* in order to preserve the system's thermal resistance. Any dimensional variation was bound to cause problems either during the installation or during occupancy. One way to this could be alleviated is to add a thin layer of compressible foam on each *side* of the splines. This would fill in the gaps created by imperfections

in the panels and the splines, and it would provide some additional dimensional tolerance. (Figure 3.19)

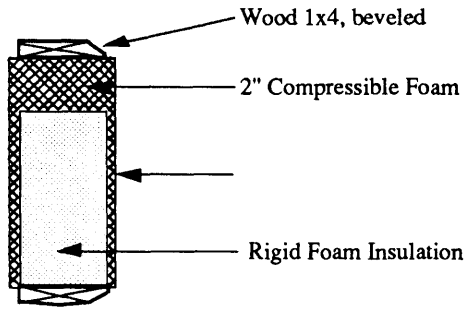

Figure 3.19
Ideal Configuration for the Splines

The other way to solve this problem would have been to simply design the house so that dimensional tolerance was incorporated. One edge should be free to slide relative to the exterior wall. While this is also true at the eave, it is especially important at the rake. The width of the roof system cannot be expected to correspond exactly to the width of the house. A rake detail like that shown in Figure 3.20 would have provided this tolerance.

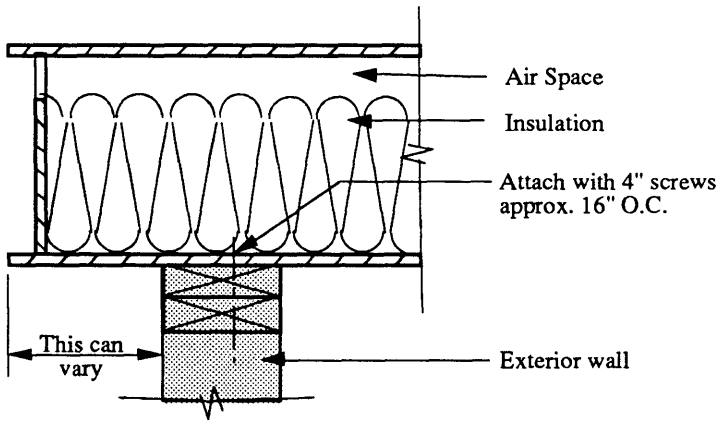

Figure 3.20
Rake Detail that Provides Tolerance

Chap. 4 *Implications for Designers*

The Personality of the System

As demonstrated in the IBACoS House, many decisions that are made during the design of a house can affect the performance and ease of installing the panelized roof system. Although the system was intended to be flexible enough to work easily with a wide range of house designs, it nevertheless has several idiosyncrasies, and because the IBACoS House was not originally designed to be built with the roof system, it could not accommodate these. Ideally, every building should be designed with the specific components and building systems that will be used in mind. This allows the designer to account for the particular requirements of the various systems. For example, special consideration must be given to the way prefabricated elements connect with other elements. Often this leads to a particular type of detailing, and thus a *personality*. If this consideration is not given to the prefabricated components during the design process, problems can arise during construction, and even later.

Any building system imposes certain constraints on the design of a building. The use of 4'x8' plywood sheets and other types of exterior sheathing often leads to a building with standardized dimensions. The exterior dimensions of most houses tend to be even multiples of 4'-0", or 2'-0". Wall framing is typically 16" or 24" on center so that it fits evenly into this 48" module. Special accommodations are even made at the corners, where framing members are placed at different intervals in order to stay within the constraints of the 4'-0" sheet of plywood. (Figure 4.1)

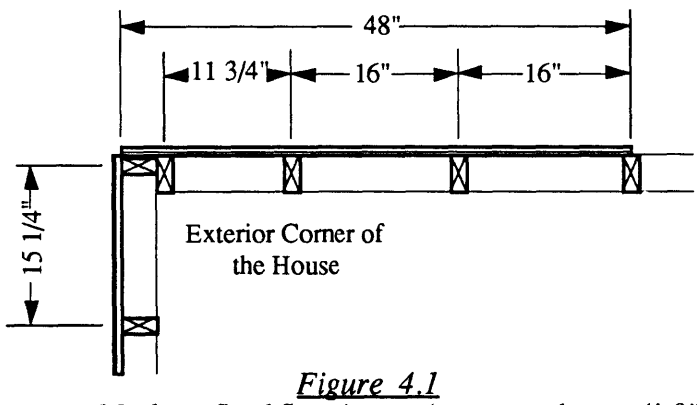

Figure 4.1
Adjustments Made to Stud Spacing to Accommodate a 4'-0" Module

Another common building system that has a certain personality is masonry. Masonry units are standard prefabricated elements that are assembled on-site, similar in this way to the roof panels, and like the roof panels, they are difficult to cut and trim in the field. Because of this, outside dimensions of masonry buildings tend to be even multiples of 8" or 16", and vertical dimensions are based on an 8" unit. Although this is a very small module, it does have an impact on the appearance of the building and on the way other building components interact with the masonry. Windows and doors, for example, must be sized to fit within these modules. Because of this, a 7'-0" door frame typically has a 4" head, rather than the usual 2", to accommodate the 8" masonry unit. (Figure 4.2)

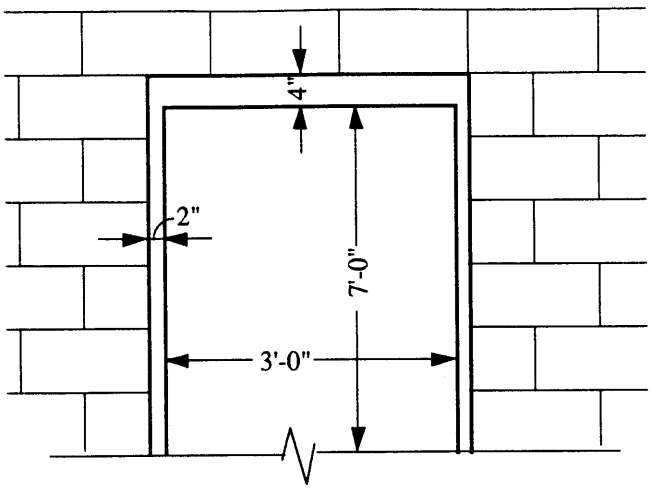

Figure 4.2
4" Head on the Door Frame Allows It to Stay within 8" Masonry Coursing

Both plywood and masonry are so common in the construction industry that these design constraints are often taken for granted. However, in many other instances, the selection of a particular building system or component is critical to the design of the building. Examples include the selection of a roofing material, window type, skylights, even flooring materials. Obviously, to achieve the desired effect, a designer must be familiar with all of the systems that are incorporated into the building.

Most building systems that architects utilize are flexible enough to provide a wide variety of outcomes. Therefore, the components do not overwhelm the intended aesthetic expression. However, there are many examples where the building systems dominate the design, not only in its detailing, but in its overall appearance.

Throughout the history of prefabrication in buildings, there have been many systems that imply an aesthetic, as well as a new method of construction. The early panelized houses of Walter Gropius, Konrad Wachsman, Ernst Meyer, Hans Sharoun, et al., had an overwhelming aesthetic that identified them as panelized houses. (Herbert, 1984) The prefabricated steel houses of Europe in the late 20's and early 30's and the copper houses in Palestine carried with them the unmistakable *look* of a prefabricated house. Buckminster Fuller's dymaxion

homes were as much stylistic revolutions as they were technical innovations. Even Frank Lloyd Wright's Usonian Automatic houses with their small and flexible unit did not offer enough alternative aesthetic expressions. (Morse-Fortier, FLW, 1991)

Although a complete history of prefabrication in the housing industry is beyond the scope of this work, a few examples provide some perspective on the roof system that is the subject of this thesis. Most of the building systems designed by architects have failed to make much of an impact in the broader marketplace. Although several factors contributed to their limited appeal, one that cannot be ignored is the aesthetic that accompanied the systems. Perhaps the stylistic changes were simply more than consumers were ready for.

This roof system sought to avoid this pitfall by becoming completely "transparent", meaning it will not look like an innovative product when the house is complete. However, that does not mean it is without design constraints. Because it is a building *system*, there are certain requirements that must be accommodated when employing it.

Design Considerations for Use of the Panelized Roof System

The following discussion lists many of the considerations that a designer must keep in mind when employing the panelized roof system. Although none of these considerations present a barrier to the system's use, they are issues which are atypical in traditional construction.

The roof panels will need to be installed with a crane.

Because of the size of each roof panel, typically weighing in excess of 400 pounds, and the ridge beam, which can be over 600 pounds, a large crane is absolutely necessary for installing the system. This has many implications. First of all, the builder must have access to a crane. Sometimes this will prove to

be a challenging scheduling problem, as the crane must often be ordered well in advance. Furthermore, because of its expense, it should be fully utilized as soon as it arrives on the site. Poor scheduling could increase the cost of using the system.

The second implication is that the site must be open and fairly level. Sites that are heavily wooded or steeply sloped may make access with a crane difficult. The IBACoS House was on an open but steeply sloping site, causing some minor difficulties. If it had been steeper or more heavily wooded, the installation would have been impossible.

The roof system is best utilized on relatively steep roofs.

The slope of the roof is very important to this system. The primary advantage that the system has over roof trusses is that it creates habitable space beneath the roof. This implies that the roof must be steep enough to create this usable space. Furthermore, the slope has an effect on the structural capacity of the ridge beam. Steeper roofs allow for a deeper ridge beam. When the slope gets as low as 7:12, the structural capacity of the beam drops dramatically. (Figure 3.7) This implies that more supports will be needed for the ridge beam.

The roof system is best utilized on fairly simple roof forms.

Although the roof system is designed to be more flexible than roof trusses, complex designs require a more demanding installation procedure. When panels are placed on the house, they are typically registered at the ridge. However, where a hip occurs there is no ridge, and in a valley the panel does not extend to the supporting wall below. Therefore, in these locations, each panel must be attached to the one next to it as soon as it is placed on the house. (Figure 4.3) This can slow down the installation process. During the installation for the proof-of-concept, straight panels could be placed as quickly as one every 3-5 minutes. However, panels at the hip and valley took as long as

10-15 minutes, for a well-trained crew. Obviously, the most efficient, and best use of the roof system is on long straight gables where several panels can be placed in succession without having to pause to fully attach each one.

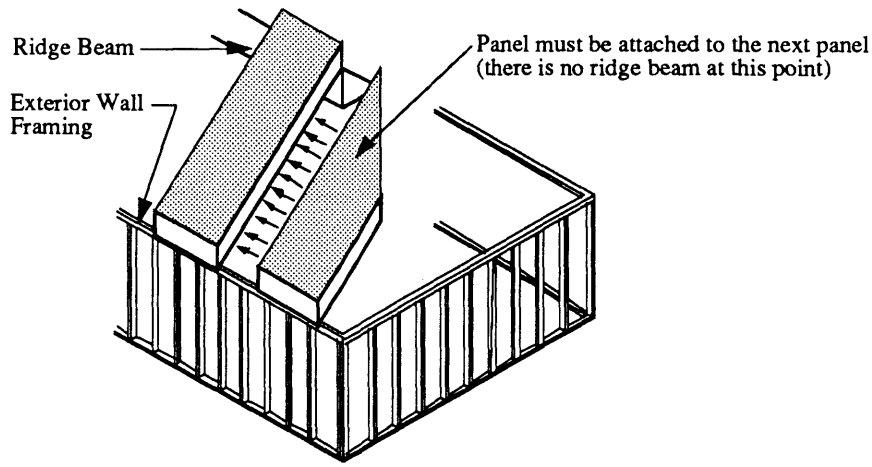

Figure 4.3
Installation of the Roof System at a Hip

The roof system does not function as a diaphragm.

This is a very important consideration in regard to lateral load distribution. When roof panels are installed on a house, the continuity required to form a diaphragm is difficult to achieve. Instead, the system has been designed so that the panels deliver their portion of the lateral load directly to the ridge beam, which then delivers it to the supporting shear walls. (Figure 1.22) In this way, the roof system avoids the interaction forces associated with diaphragm action, including the stresses that develop in the panel-to-panel joints.

Because the roof system relies on the ridge beam for lateral support, it is inappropriate for house designs that cannot accommodate a ridge beam. In a shed roof, for example, providing for the ridge beam may be both difficult and awkward. (Figure 4.4) While the gravity load carrying function of the ridge beam can be replaced by a wall, its lateral load carrying ability cannot. Consequently, an alternative means of carrying lateral loads is necessary.

Although there are many possible ways that this can be accomplished, the strategy will be an important consideration, affecting the design of the entire house.

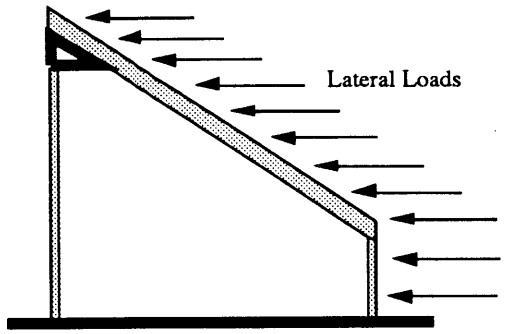

Figure 4.4
Ridge Beam in a Shed Roof

The width of the roof should be a multiple of 4'-0".

Ideally, the roof should be constructed with standard 4'-0" panels. However, if this is not possible, the manufacturing line for the panels is also being designed to produce sizes of 18" and 33" when necessary. Roofs with a width that do not fit within these parameters will require specially made panels, adding to the cost of the system.

Dimensional tolerance must be provided in the design of the house.

As discussed earlier, one of the worst difficulties encountered in the IBACoS House was the lack of dimensional tolerance in the width of the roof. This lack of tolerance created a situation where the panels had to be trimmed in the field and pieced together. Although some of the details involved with providing this tolerance have been discussed, it also represents a more comprehensive design strategy. Any prefabricated system that is being incorporated with others requires careful attention to this issue.

The interior space will be truncated at the peak.

The shape of the ridge beam provides many advantages, including resistance to lateral loads and a concealed service space. However, it alters the appearance of the interior space. The ridge beam has been designed so that it accepts a standard 4'-0" wide piece of drywall across its bottom. Therefore, the roof system encloses a space that does not reach a peak. Instead it is truncated well below. (Figure 4.9)

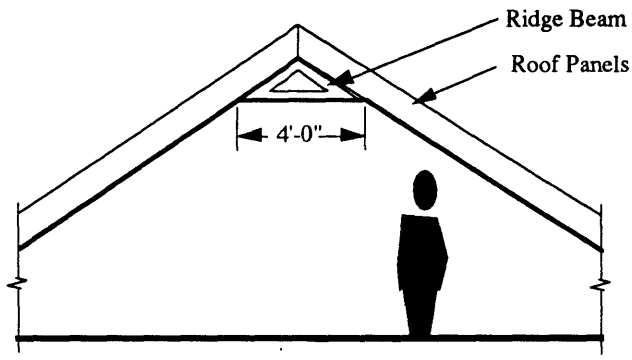

Figure 4.9
Truncated Interior Space

Utilities should be confined to the ridge beam and the walls.

Because the panels are prefabricated and shipped ready for installation, it is very difficult to run any type of service through them. For this reason, the ridge beam has been designed to accommodate most of the utilities within it. Elements such as ceiling mounted light fixtures, ceiling fans, air diffusers, and recessed can lights should be placed within the ridge beam, not the panels. While this constraint actually strengthens the thermal enclosure the roof system provides, it requires a change in attitude from the traditional approach.

Supports for the ridge beam should be provided at intermediate locations.

The maximum span of the ridge beam will depend on the width of the house and the design load. In most cases, the ridge beam should be placed over intermediate supports rather than end supports. This multiple span configuration will substantially reduce the bending moment, thus allowing a greater distance to be covered with a single ridge beam. (Figure 4.10)

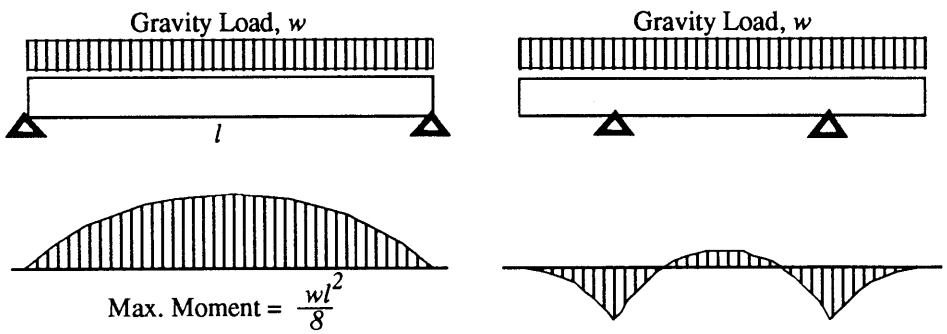

Figure 4.10
Moment Diagram for a Simply Supported Beam Compared to One with Intermediate Supports

The Cost of the System

Taken together, all of these constraints may make the system seem to be somewhat limited. The roof system is not applicable to every house, but for those to which it is, consideration must be given to the items listed above. Ideally, any house using this system will be designed with these considerations in mind. The reality, however, is that the roof system may be applied to houses, such as the IBACoS House, that were not designed with the intention of using it. While the system has been developed to adapt easily to many different house designs, the benefits associated with its use, decreased costs and improved performance, come only with attention to these issues. An acute awareness of this will be important, especially in the early development of the system, as two of the main three goals listed in Chapter 1 depend on proper installation and appropriate applications.

Chap. 5 *Preliminary Ridge Beam Investigation*

The Original Design

Up to this point, most of the attention of this thesis has focused on the panels and their connections. Indeed, the roof system is based on the panels. However, the most important element structurally is the ridge beam. As explained in Chapter 1, the ridge beam carries a little more than half of the vertical loads and almost all of the lateral loads.

Originally, the ridge beam was made up of three different types of wood: oriented strand board, parallel strand lumber, and standard wood 2x4's. Each offered some benefits the others did not, and each was deployed to take advantage of these.

Problems Associated with the Original Design

The original ridge beam was manufactured by taking small triangular wood

trusses, made of 2x4's, roughly 32" on center, placing long stringers made of parallel strand lumber, in each corner, and sheathing the top two sides and part of the bottom with two layers of continuous oriented strand board. (Figure 5.1)

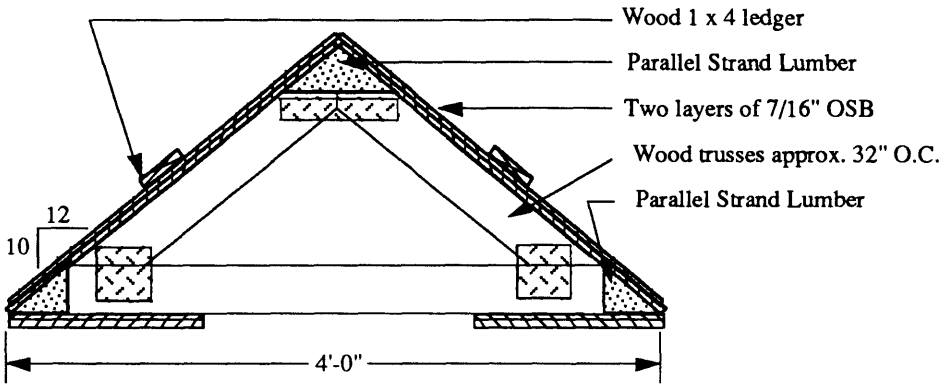

Figure 5.1
Section through the Original Ridge Beam

One of the most difficult tasks in doing this for the proof-of-concept structure was cutting the stringers from parallel strand lumber. The procedure involved ripping a long 4x8 piece of parallel strand lumber at an angle corresponding to the roof pitch. This was done twice, creating a triangular section for each corner. (Figure 5.2)

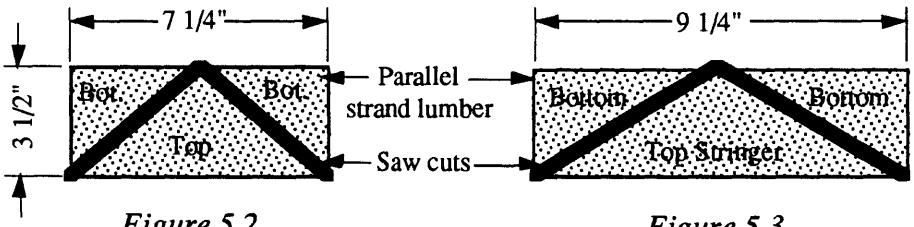

Figure 5.2
Manufacturing of Original Stringers

Figure 5.3
Stringers for a 7:12 Slope

Although this cut could be accomplished more easily in a manufacturing plant, it becomes more difficult when the roof slope is reduced. The angle of the saw would increase, the depth of the cut would increase, and the piece of parallel strand lumber would need to be much larger. (Figure 5.3)

The superior strength and quality control associated with the parallel strand lumber is impressive, but there is at least one obvious drawback. Parallam® is the only parallel strand lumber manufactured today. It is a proprietary material and is quite susceptible to price fluctuations.

Another concern associated with the original design was the use of continuous sheets of OSB. If standard 8'-0" long sheets of OSB could be used to sheath the beam, it would be possible to reduce the cost. While the amount of material used would remain the same, the 8'-0" sheets of OSB are much less expensive, and the cost savings would be more than enough to offset the increased manufacturing costs associated with having more discrete pieces.

Design Modifications and Analysis

The cost associated with the OSB sheathing has been fairly easy to deal with, as 8'-0" sheets of OSB can be overlapped and staggered to ensure that most of the continuity is maintained. They can be positioned so that no more than one joint occurs at any position along the length of the ridge beam. (Figure 5.4)

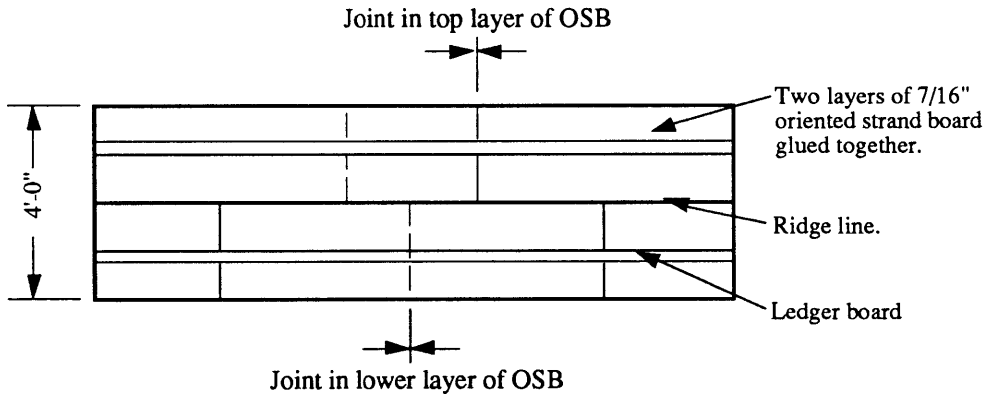

Figure 5.4
Top View of the Ridge Beam

To address the problems associated with Parallam®, the use of machine stress rated wood 2x's (MSR) was proposed. MSR is lumber that has been sorted by machine according to its stiffness and predicted strength. (refer to SPIB, 1991) By doing this, wood that is naturally strong can be identified as such. MSR 2x4's and 2x6's are commonly used by roof truss manufacturers, and are therefore, available in a variety of strengths and stiffnesses. Furthermore, they are easy to cut and can be combined with screws and glue to form almost any shape.

To most effectively use the MSR, the optimum size, strength, and configuration had to be determined. To do this an iterative process was used. Many options were proposed, each one was analyzed, and they were compared. To help in this, a spreadsheet, similar to that used to analyze the panels, was created. Like the analysis of the panels, this one also had to examine several performance criteria with regard to the proposed designs. The criteria included:

1) Shear through the neutral axis of the beam
2) Shear in the joint between the top piece of MSR and the OSB sides
3) Shear between the bottom pieces of MSR and the OSB sides
4) Shear between the bottom pieces of MSR and the OSB bottom
5) Compression in the top pieces of MSR
6) Tension in the bottom pieces of MSR
7) Tension in the bottom pieces of OSB
8) In-plane bending in the OSB sides
9) Deflection due to live loads (limited to l/360)
10) Deflection due to total loads (limited to l/240)

Several configurations and a variety of wood strengths were examined against the criteria listed above. In most cases, alternatives varied only slightly from the original design, which was effective because it placed the strongest material as far away from the centroid as possible. (Figure 5.1)

As mentioned, the spreadsheet used to analyze the ridge beam is similar to that used to analyze the panels. (Appendices B & C) It was designed to calculate the

maximum allowable loads for the ridge beam based on each of the criteria listed previously. This was accomplished through a transformation of the following standard equations. Again, these equations are similar to those used in Chapter 2:

1-4) Shear in any of the joints or in the neutral axis:

$$f_v = \frac{V_{max} Q}{I_x\, b} \leq F_v \qquad (2.1a)$$

5-8) Compression and tension in the MSR and OSB due to bending:

$$f_b = \frac{M_{max}\, c}{I_x} \leq F_b \qquad (2.2a)$$

9-10) Deflection:

$$\Delta = \left[\frac{5(LL)l^4}{384EI} + \frac{3(LL)l^2}{20AG}\right]1.75 \leq l/360 \qquad (2.3)$$

Each variation was analyzed in this manner, and a graph was generated, showing the allowable loads for each of the criteria at variety of spans. (Figure 5.5) (Appendix J provides an example of this spreadsheet)

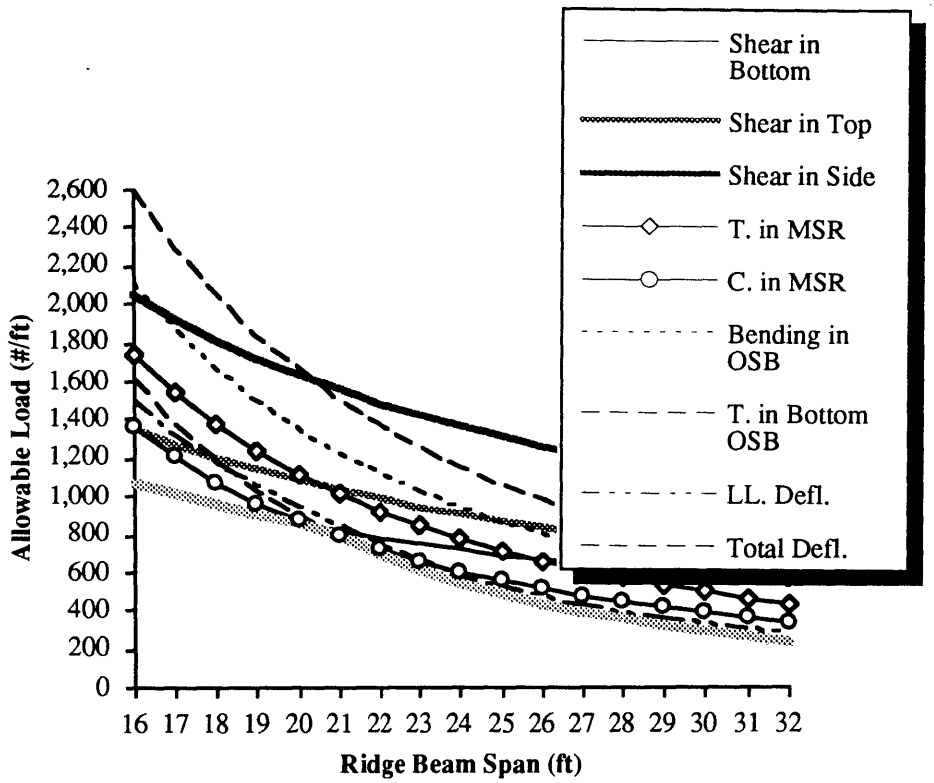

Figure 5.5
Allowable Gravity Loads for One of the Ridge Beam Options (10:12 slope)

A Comparison of the Variations

The first option that was examined placed an MSR 2x6 flat in the bottom corners, and employed a top stringer that was made up of two MSR 2x's stacked on top of each other. (Figure 5.6) All of these 2x's would be beveled to provide some contact area between the MSR and the OSB sides. However, despite the beveled surfaces, this option, did not provide enough contact between the bottom 2x6's and the OSB sides to resist the shear force in the joint.

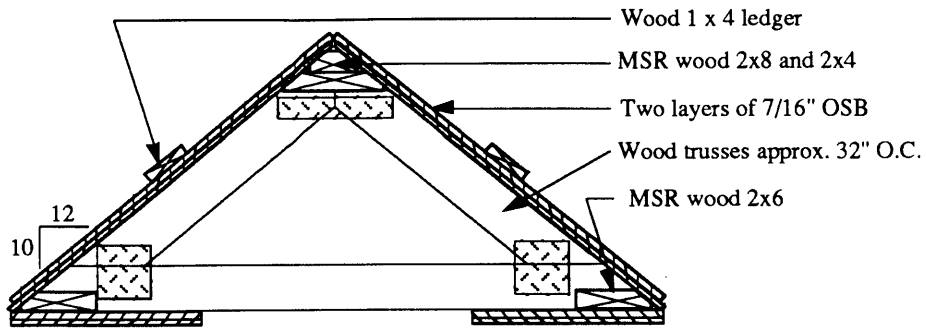

Figure 5.6
Section through the First Option

With this in mind, several variations were examined that simply placed these 2x6's at an angle, parallel with the OSB sides. (Figure 5.7) The size of the members making up the top stringer, the size of the bevels, and the strength of the wood were all varied.

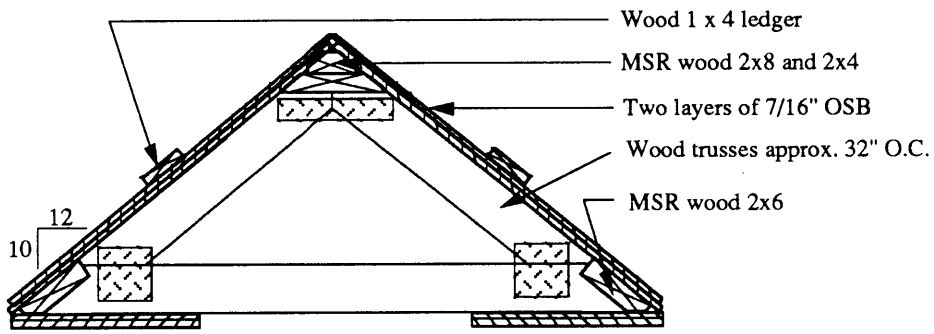

Figure 5.7
Section through the Second Option

The internal wood trusses also play an important role in the structural performance of the ridge beam, and that role relies on the strength of their connections. However, in the original design, the shape of the top stringer left very little wood in the top joint of the trusses, a joint that can be subjected to a substantial load. This became especially apparent when roofs with a lower slope were examined. The proof-of-concept structure was designed with a 10:12 roof pitch, but the IBACoS Lab House had a 7:12 pitch. This reduced the amount of wood in the top joint of the truss to less than 1/2". (Figure 5.8)

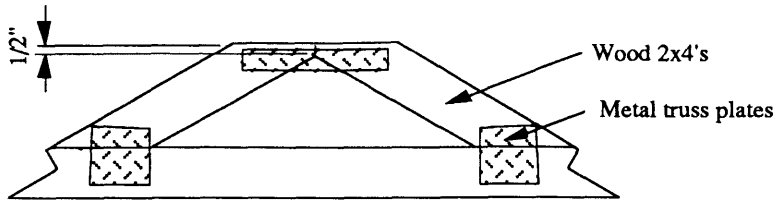

Figure 5.8
Elevation of the Internal Trusses (7:12 slope)

Because of this, several other options were examined that would provide a better connection in the trusses. One option even eliminated the top stringer, utilizing 2x4 ledgers as the "compressive chord". (Figure 5.9)

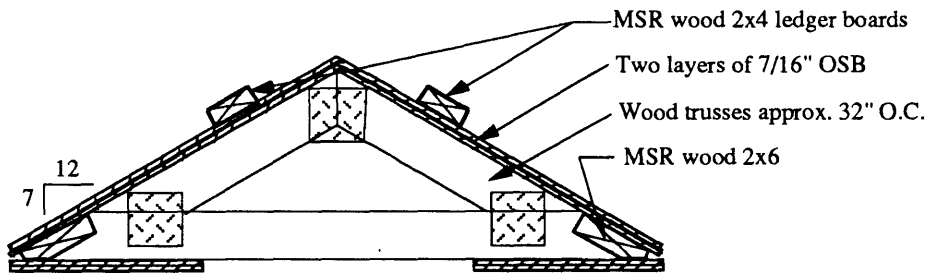

Figure 5.9
Section through the Option with No Top Member (7:12 slope)

Each of these variations was analyzed and compared to the others. A graph was prepared to show the maximum house widths, calculated from the allowable loads and the average snow load, for many of the options that were examined (Figure 5.10) (Appendix K provides a table listing the structural attributes and the maximum house widths for these options)

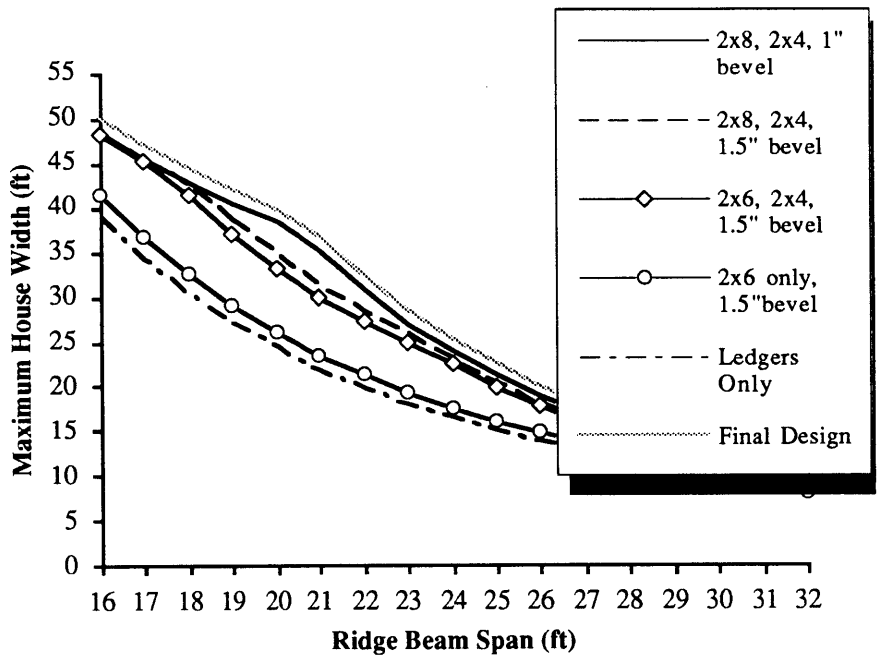

Figure 5.10
A Comparison of the Ridge Beam Variations

The final design represents the strongest of of the design proposals. In it, the top stringer is made of two pieces of MSR that have been placed at an angle, parallel with the sides, and the bottom stringers are made with three pieces of MSR. (Figure 5.11)

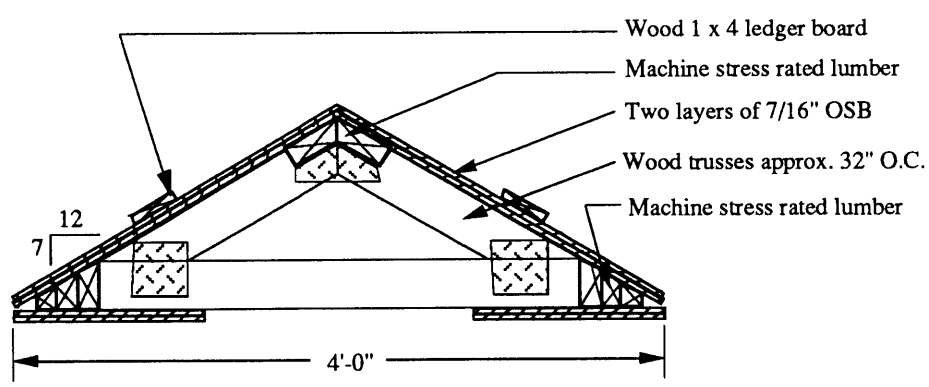

Figure 5.11
Section through the Final Ridge Beam Design

This configuration, like the original, places the strongest wood far away from the two neutral axes, and it provides a substantial amount of contact area between all of the MSR members and the OSB. An additional benefit to this design is that the stringers can be manufactured by ripping four 2x6's at an angle that corresponds to the roof slope and combining them as shown. (Figure 5.12) This eliminates the waste that would have created by beveling.

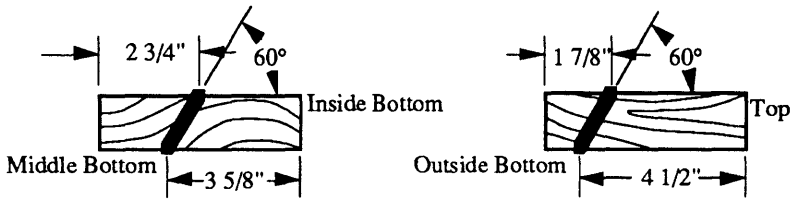

Figure 5.12
Manufacture of the Stringers for the IBACoS House
(two pieces of wood were cut for each setup)

Analysis of the Ridge Beam under Lateral Loads

To analyze the ridge beam's behavior under lateral loads, a similar spreadsheet was used. The same performance criteria were examined, and the maximum allowable loads were calculated with Equations (2.1a), (2.2a), and (2.3). Graphs were then prepared showing the maximum allowable lateral loads for various spans and compared. (Figure 5.13) (Appendix L shows an example of the spreadsheet used to produce these graphs. In it, the final IBACoS ridge beam is analyzed)

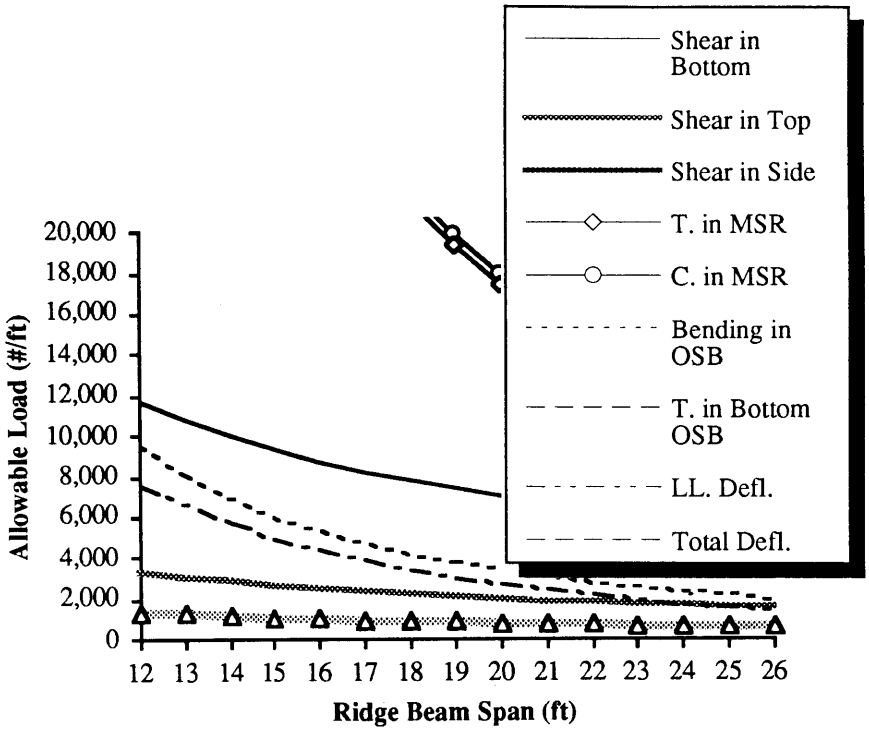

Figure 5.13
Allowable Lateral Loads for the Final Ridge Beam Design (10:12 slope)

As is apparent from Figure 5.13, the lateral load carrying capacity of the ridge beam is dictated by one criteria: shear across the top seam (the neutral axis). Because of this, the OSB sheathing is overlapped at the top, and the pieces of MSR are screwed together. (Figure 5.14)

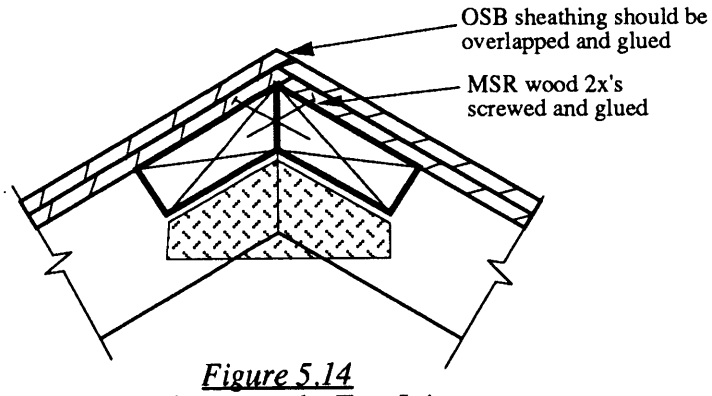

Figure 5.14
Attachment at the Top Joint

If this is not enough to provide the necessary lateral load carrying capacity in the ridge beam, diagonal bracing should be added to the bottom. This will be discussed in more detail in Chapter 7.

This analysis was primarily 2-dimensional. However, like the roofs described in Chapter 1, the ridge beam will experience complex 3-dimensional effects. In fact, one fairly obvious criteria that was not considered, because it could not be analyzed with the simple 2-dimensional techniques used here, is the stresses in the internal trusses. To better understand the complex 3-dimensional interaction of elements, it was necessary to employ a more powerful tool: the finite element method.

Chap. 6 *The Ridge Beam Subjected to Gravity Loads*

An Overview of the Method

This chapter examines the analysis of the ridge beam with a finite element modeling software, ABAQUS® Version 5.2. Because of the complexity involved with finite element modeling, a specific example, the ridge beam from the IBACoS Lab House, was used to base the analysis on. From this, generalizations have been made regarding the ridge beam's generic behavior. It should be noted that the magnitude of the stresses seen in this analysis may vary.

Finite element modelling begins as a thought process, in which the actual structure is conceived as a collection of small interconnected pieces. The location of each piece is defined by *nodes*, points in 3-dimensional space. Each piece is then defined as an *element* connecting a group of nodes, and properties relating to its shape and material are assigned to it. The nodes and the elements together form a *mesh* which resembles the shape of the actual structure. (ABAQUS, 1992)

After this discretization is complete, loads are applied to the model, and it is analyzed. During the analysis, continuity in deflection, and usually slope, is enforced at all nodes shared by adjacent elements. The analysis results for the individual elements are then combined to provide a picture of the overall structure's behavior. For more information on the finite element method, consult the ABAQUS® software manuals or one of several fine textbooks on finite element modeling. (eg. Zienkiewicz, 1977, Fleming, 1989, etc.)

In this investigation, a series of tests were conducted on the model of the ridge beam. Many of these tests were also been conducted on a model of a wood I-beam, and from this, parallels have been drawn to the ridge beam. As a result of this investigation, several changes to the design of the ridge beam have occurred, and each of these will be discussed.

The Finite Element Model of the Ridge Beam

The following discussion will briefly explain the steps that were taken to model the ridge beam with an FEM. Again, this is not a detailed explanation. (Appendix M is the input file for the FEM)

The first, and most critical step in creating a good finite element model is defining the mesh. In doing this, the density of the mesh must be carefully considered. A very coarse mesh, with nodes widely spaced, will require less time and memory space to perform the calculations. Conversely, a very fine mesh, with nodes closely spaced, will require more time and memory space, but the results will be much more accurate. Consequently, an appropriate balance must be achieved.

In modeling the ridge beam, this relationship became quite apparent. The mesh was originally defined so the sides consisted of just one row of elements, five on each side, and each stringer consisted of ten. However, the results did not seen to provide an accurate account of the ridge beam's actual behavior. Therefore, the mesh was refined several times, until finally, each side consisted of twenty

elements and the stringers were made with forty. (Figure 6.1) This has provided much more realistic results, while not being too cumbersome.

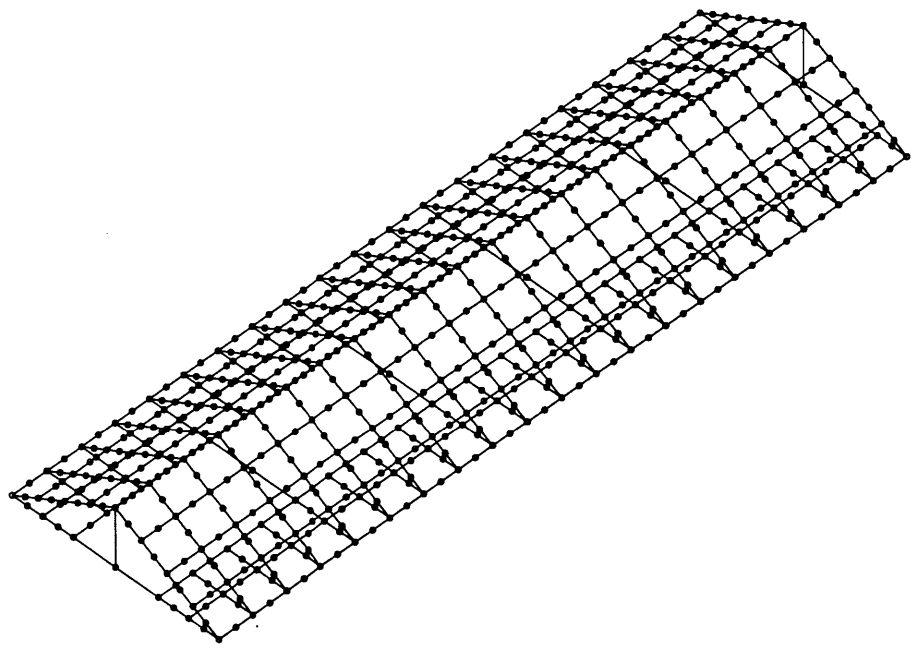

Figure 6.1
Finite Element Mesh of the Ridge Beam

Considering the variety of element types that are available within the ABAQUS® software, the model of the ridge beam is actually quite simple. It consists of two types of elements: shells and beams. Orthotropic eight node shells, allowing axial stress in two directions, in-plane shear stress, transverse shear stress, out-of-plane bending about both axes, and in-plane bending were used to make up the OSB sheathing. The stringers and the truss members were modeled with isotropic two node beams, which admit axial stress, transverse shear stress, bending, and torsion.

Next, a thickness for the shells was designated, and a cross sectional shape was given to each beam element. The three materials in the ridge beam were then defined and tied to the appropriate elements, and the material orientation in the shells was designated.

Then, boundary conditions were defined. For this model, a constraint was placed at the midpoint of the top of the ridge beam, which constrained that node from moving along the x-axis and the y-axis, and from rotating in the xy-plane. Additional constraints were placed at each end, across the bottom of the beam. These simulated the supports by prohibiting movement in the z-direction. (Figure 6.2)

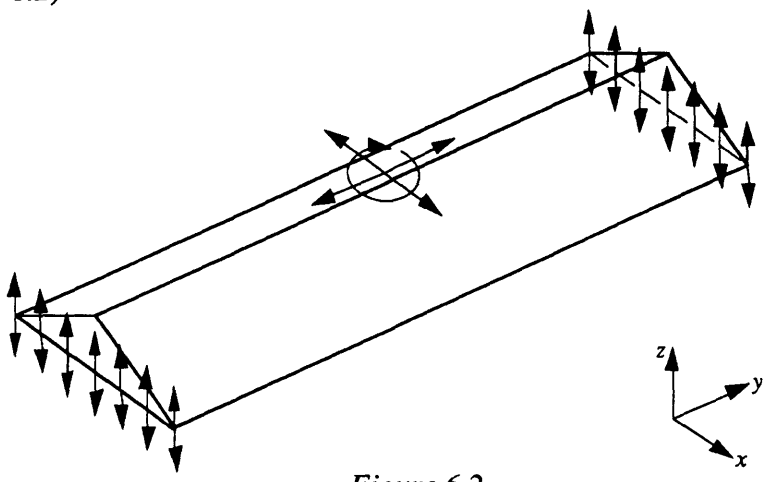

Figure 6.2
Boundary Conditions Imposed on the FEM
(arrows indicate that motion in that direction is constrained)

The last item entered before the analysis was performed was the loading. Again, many variations were possible, but for the ridge beam two seemed plausible. First, a uniformly distributed vertical load could be applied along the line of the ledger board. This reflects one interpretation of the way the roof panels will deliver the loads to the ridge beam. (see Figure 3.10) However, it is not clear that the stiffest load path is through the ridge beam's OSB sheathing. The panels may be stiff enough to deliver concentrated loads directly to the trusses. To simulate this in the FEM, point loads were applied at the nodes corresponding to these locations. (Figure 6.3)

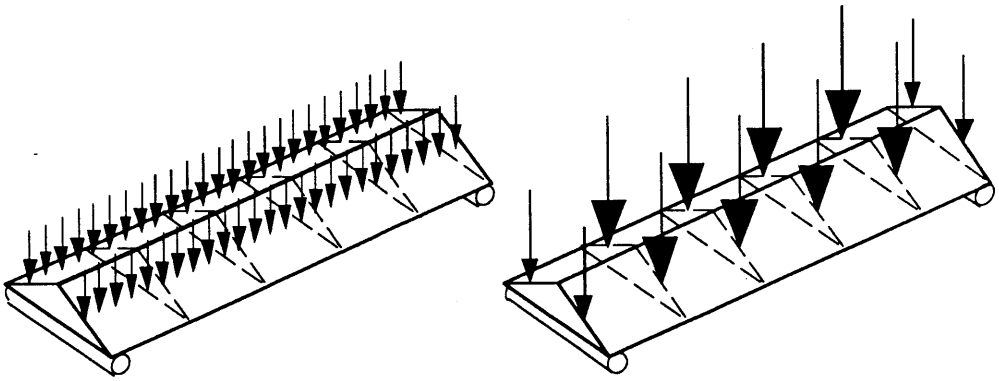

Figure 6.3
Continuous Loading vs. Discrete Point Loads

Which is the most realistic condition? The model has been tested each way, and it has proven to make very little difference to the overall performance of the beam (internal forces varied approximately 3%). Therefore, in order to save time and memory space, all subsequent analyses were performed with point loads on the trusses.

Limitations of the Finite Element Model

When using a finite element package, it is important to recognize its limitations. The model itself is composed of lines and planes spanning between nodes, each of which has been assigned a stiffness that corresponds to the actual structure. (Figure 6.4)

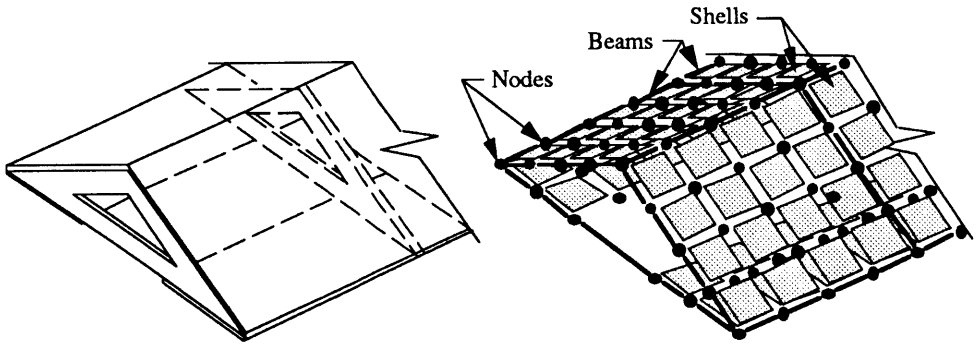

Figure 6.4
Ridge Beam Converted to a Finite Element Model

When an analysis is performed, the FEM simply reports stresses and forces, taking into account the stiffness and material property of each element. For the purpose of these calculations, the strength of each element is assumed to be infinite. Because of this, the operator must pay careful attention to the reported stresses. If the stress exceeds the strength of the material, the FEM has no way of knowing. Therefore, this task is left up to the operator.

Another important consideration derives from the fact that each of the elements spans from node to node. Where two materials or elements come together, they simply share nodes. (Figure 6.5)

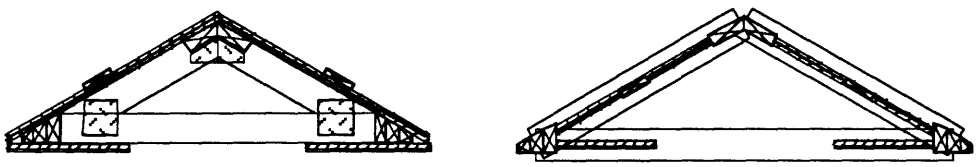

Actual Ridge Beam FEM of the Ridge Beam

Figure 6.5
All Elements Are Centered on the Nodes in the FEM

This means that in the FEM, no consideration is given to the strength of the connection between materials. This is problematic because, as discussed in Chapter 5, shear in the joints is one of the most important considerations in the design of the ridge beam. Consequently, the shear in all of the joints had to be calculated by the operator. It should be mentioned that continuous connections can be considered with the ABAQUS® software package, but it requires the use of two sets of nodes and a separate connecting element with a given stiffness. This would add considerably to the time and memory space required to analyze the model. (ABAQUS, 1992) It is beyond the scope of this work to undertake such a detailed analysis of inter-component connections.

Issues to Be Resolved

Because of the wide variety of data that can be obtained from the FEM, the issues that needed to be examined had to be well defined before the analysis was carried out. One issue was the design of the internal trusses. In order to the determine appropriate size and strength of the truss members, the forces acting on them had to be better understood. The other issue was the interaction between the OSB and the other materials. The OSB was assumed to have a role in resisting shear, transferring the axial forces into the MSR stringers, and resisting bending, both by resisting in-plane bending and by adding material to the bottom of the beam to resist tension. However, the magnitude of these forces was not well understood.

Investigation into the Trusses

Prior to the analysis with the FEM, it was not clear whether the bottom chords of the trusses were in compression or tension. The confusion came from the difficulty involved with drawing a good free body diagram of the trusses. At the supports (Figure 6.6), loads from the roof panels appear as concentrated loads on the top chords of the truss. The OSB sheathing delivers the load from the rest of the beam shear in the glue joint. The vertical reactions are supplied at the outside corners of the truss. If we assume that no horizontal reactions are provided by the house, this places the bottom chord of the truss in tension.

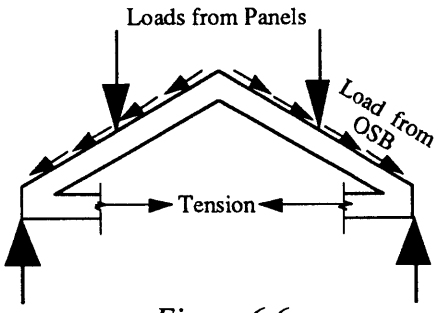

Figure 6.6
Free Body Diagram of End Trusses

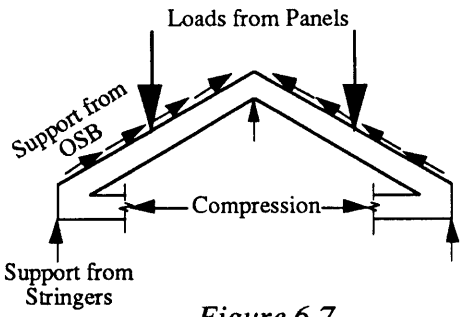

Figure 6.7
Free Body Diagram of Center Trusses

Away from the supports, it was difficult to place the location of the vertical reactions. Again, the load from the roof panels would appear as point loads on the top chords of the truss. It seemed that some vertical support would come from the stringers, and the OSB would provide some, due to its resistance to in-plane bending. This seemed to place the bottom chord in compression. (Figure 6.7)

However, the two diagrams seemed to be contradictory. Which of them best represents the trusses *near* the supports? Is there a gradual transition from compression to tension in the bottom chords of the trusses? What is the magnitude of the forces within these trusses? Are they the same throughout the ridge beam or is there a change along the length of the beam? All of these questions were important to determine the size and strength of the truss members and their connections, especially because different trusses might be required at different locations.

The FEM proved to be invaluable in answering these questions. It turned out that each truss experiences both bending and axial forces in the top chords, each of which was relatively low. The bottom chords experience very little bending, but they do experience high axial forces. (Figure 6.8) In all of the trusses except those directly over the supports, the bottom chord is in compression, as predicted by the analysis at Figure 6.7. This compressive force is highest at midspan.

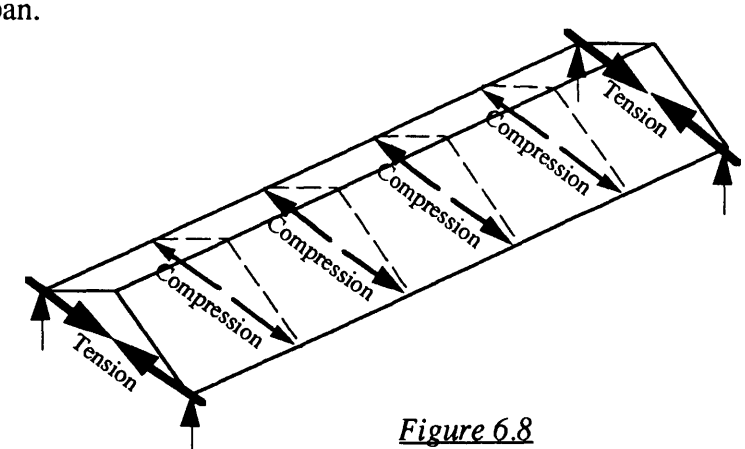

Figure 6.8
Resulting Forces in the Internal Trusses

At the ends, all of the external forces acting on the ridge beam are transferred into the supports. This happens primarily as the OSB sheathing pushes downward and outward, resisting in-plane bending. Because of this accumulation, the outward thrust in this truss is substantial. In fact, for the IBACoS ridge beam this force was so high that no 2x4 could resist it. (NFPA, 1991)

To address this problem, several possible solutions were reviewed. As is apparent in the free body diagram of the trusses at the supports (Figure 6.6), the problem stemmed partly from the low roof slope of this particular ridge beam. However, regardless of pitch, horizontal thrust develops as the entire vertical load from the ridge beam is transferred into the supports. Two solutions seemed possible. First, a kingpost could be added to the truss. This would provide another point of vertical support, allowing a portion of the vertical load to pass directly through it without developing any thrust. (Figure 6.9) The other solution was to sheath the entire end of the beam with OSB. This would provide some support vertically, and it would act as a continuous tie across the truss. (Figure 6.9)

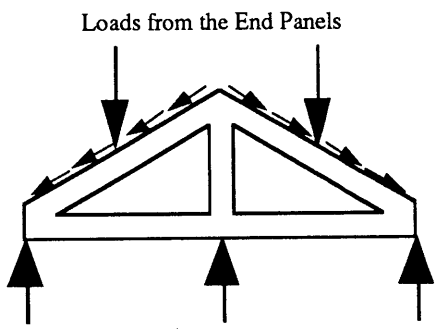

Figure 6.10
Diagram of a Kingpost in the End Truss

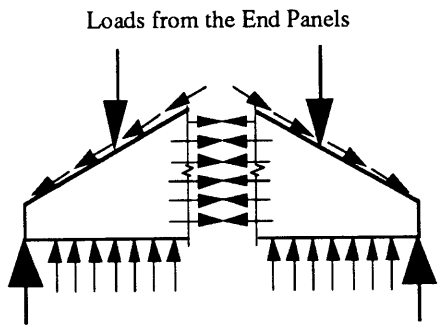

Figure 6.9
Diagram of Sheathing over the End

However, the problem with both of these solutions was that they blocked the opening at the end of the beam. This opening was important because it allows services to be run through the center of the ridge beam, as explained in Chapter 4. Therefore, in an effort to preserve this opening, another option was

considered: doubling the trusses above the supports. This would not alter the load paths, but it would provide more material to resist the force.

Other options that altered the spacing of the trusses were also examined, but as stated previously, the bottom chords of all the trusses except those *directly* over the supports are in compression. Therefore, the spacing had little impact on the amount of tension in the bottom chords of the end truss.

Each of these options was examined with the FEM, and the results showed that sheathing the end of the beam reduced the stress in the bottom chord of the truss the most. Adding a kingpost also reduced the stress, almost as much as the sheathing, but the other options improved the situation only slightly. A decision had to be made as to which of the first two options should be incorporated into the final design, and because of the concerns about running services through the ridge beam, the kingpost was chosen. (Figure 6.11)

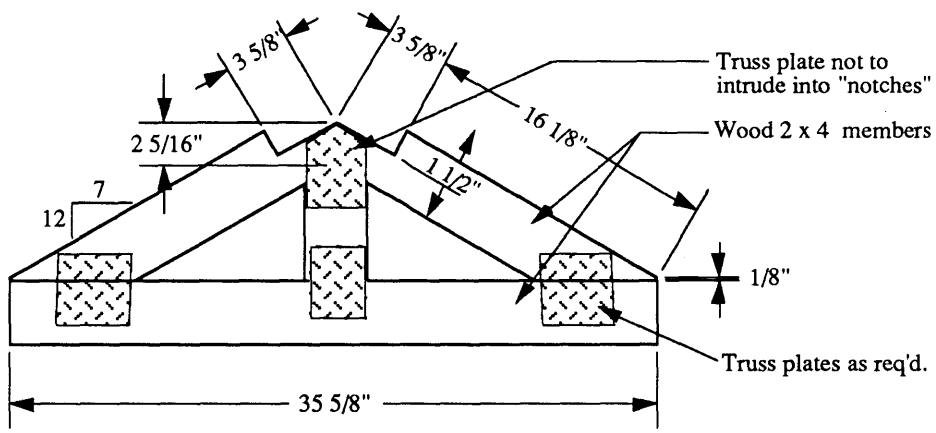

Figure 6.11
Final Design of the Trusses over the Supports

The addition of the kingpost changes many of the preconceptions that were originally associated with this design. First, although it still allows wires and pipes to enter through the end of the beam, the kingpost blocks the possibility of a duct running through the end. Ducts can, however, be located within the ridge beam if they enter the cavity from below the beam, rather than through the end. The second change is in the way the ridge beam is supported. Because the

kingpost transfers a substantial load vertically at the center of the truss, the configuration used to support the ridge beam must be capable of withstanding this force. This implies that a third column or a header will be required. Further investigation, may be required if this is too restrictive.

The Bottom OSB Sheathing

As stated previously, one of the primary goals of this analysis has been to fully understand the nature of the forces within the OSB and how it interacts with the other materials. The OSB on the bottom of the beam will first be discussed.

The most obvious, aspect of these pieces can be seen in the axial stress contour map. (Figure 6.12) As expected, there is a gradual increase in tensile stress toward the middle of the beam. For the IBACoS ridge beam, the stress starts close to zero at the the ends of the beam and increases to roughly 250 psi, well below the allowable tensile stress for OSB. (Weyerhaeuser, 1988)

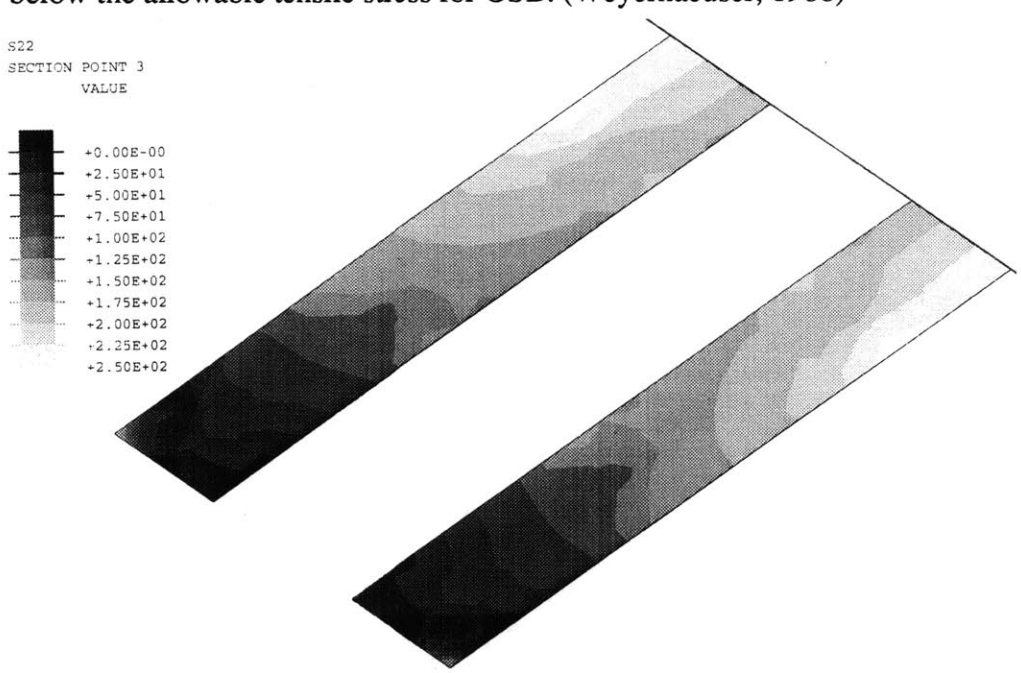

Figure 6.12
Axial Stress Contour Map of Half of the Bottom OSB

This tensile stress is a result of the bending experienced by the ridge beam. The stress distribution diagram for the ridge beam under gravity loads demonstrates this. (Figure 6.13)

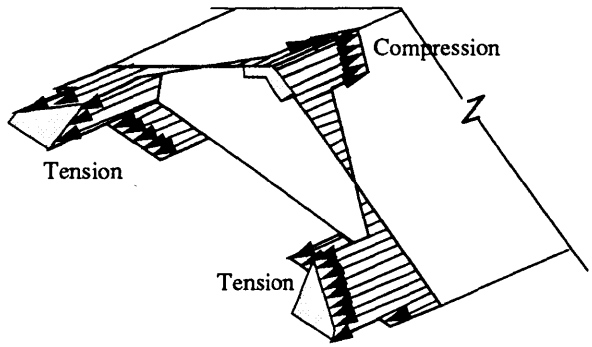

Figure 6.13
Stress Distribution in the Ridge Beam

Again, looking at Figure 6.12, one will notice that the stresses at the outside of the OSB are higher than those along the inside. This is caused by the interaction with the MSR stringers. As shown in Figure 6.13, the stringers carry higher tensile forces than the OSB, due to their stiffness. Because the OSB is attached to them, it experiences higher stress near the stringers. However, even at the inside edge of these pieces of OSB, it is clear that they contribute to the bending capacity of the ridge beam.

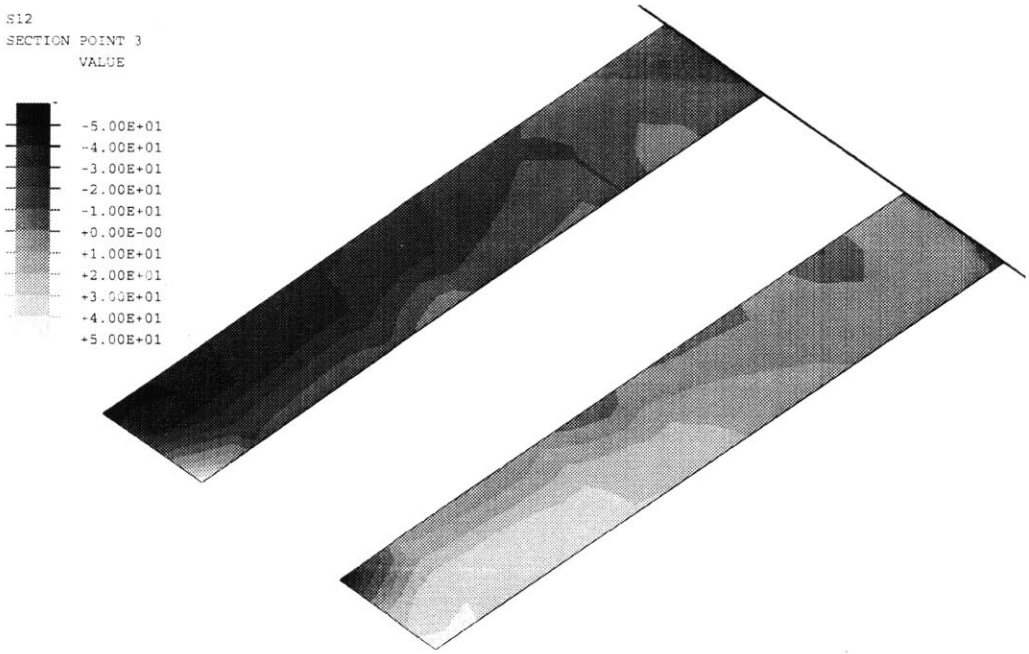

Figure 6.14

In-Plane Shear Stress Map of Half of the Bottom OSB

Also stemming from its connection to other materials, the OSB experiences an increase in shear stress near the end of the beam. (Figure 6.14) This is caused by the outward thrust in the end truss. Because the OSB is attached to the bottom chord, shear develops in the last bay as the OSB tries to remain rectangular. (Figure 6.15)

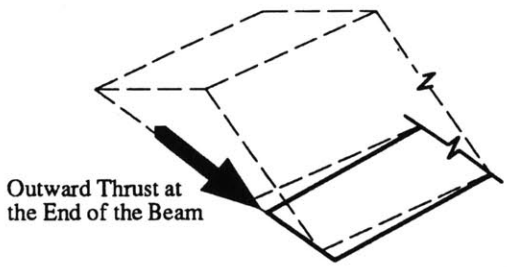

Figure 6.15

Shear in the Bottom OSB Caused by Outward Thrust

The Top OSB Sheathing

The analysis of the top OSB sheathing was considerably more complicated. The stress contour maps showed many anomalies that could not be easily explained. Therefore, a model of a 24" deep wood I-beam with an OSB web and MSR 2x4's flanges was created. (Figure 6.16) This model was the same length, and it had the same loading.

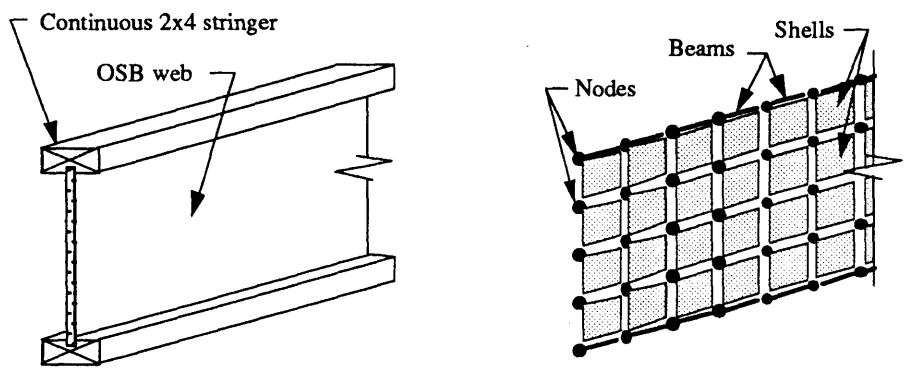

Figure 6.16
Finite Element Model of a Wood I-Beam

The wood I-beam was chosen as a comparative model because of its similarities to the ridge beam. In a wood I-beam much of the bending capacity comes from the axial strength of MSR flanges, similar to the stringers in the ridge beam. The OSB web resists shear and transfers the forces into the flanges, again like the ridge beam. Furthermore, because it is a much simpler model, it could easily be modified and tested while investigating the anomalies mentioned before. Many tests on the I-beam model were conducted as a means to fully understand the behavior of the ridge beam.

The first issue that was examined was the longitudinal stress in the OSB. The axial stress contour maps of both the ridge beam and the wood I-beam. (Figures 6.17 and 6.18) generally demonstrate the behavior predicted by the stress distribution diagram. (Figure 6.13) Lighter tones (positive numbers) indicate tensile stress, while the darker tones (negative numbers) indicate compressive stress.

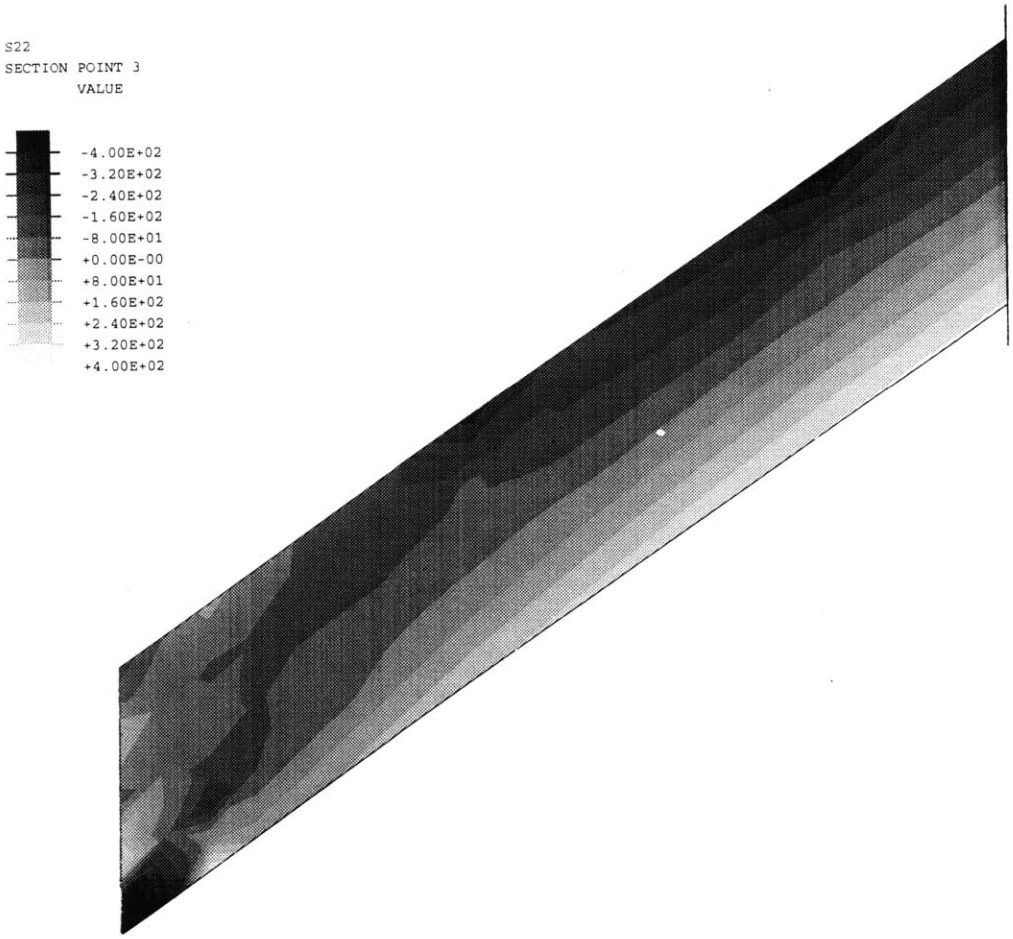

Figure 6.17
Axial Stress Contour Map of Half of the OSB in a Wood I-Beam

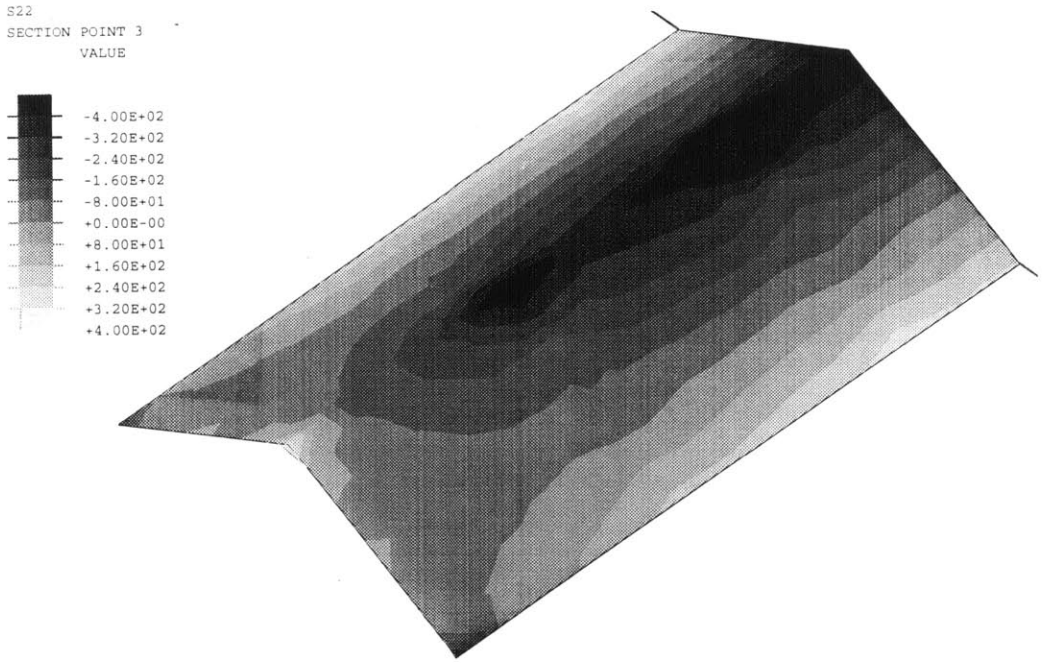

Figure 6.18

Axial Stress Contour Map of Half of the Top OSB Sheathing on the Ridge Beam

Several anomalies are apparent in these maps. First of all, there is an increase in the axial stress at the point loads. The explanation of this phenomenon lies with the FEM's consideration of Poisson's ratio. Because of this, there is an increase in compression in the element that is being loaded and those immediately surrounding it. (Figure 6.19)

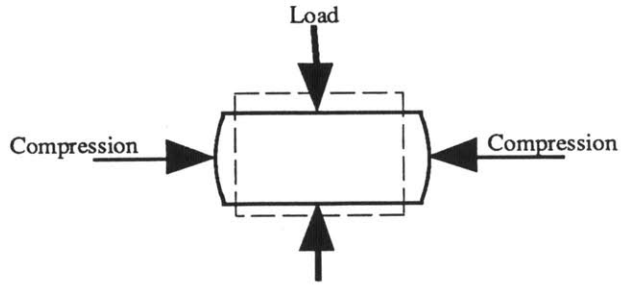

Figure 6.19

Compression Caused by Poisson's Effect's

To verify this, Poisson's ratio for both materials in the wood I-beam model was reduced to zero. The resulting analysis showed that the stress concentrations disappeared. (Figure 6.20)

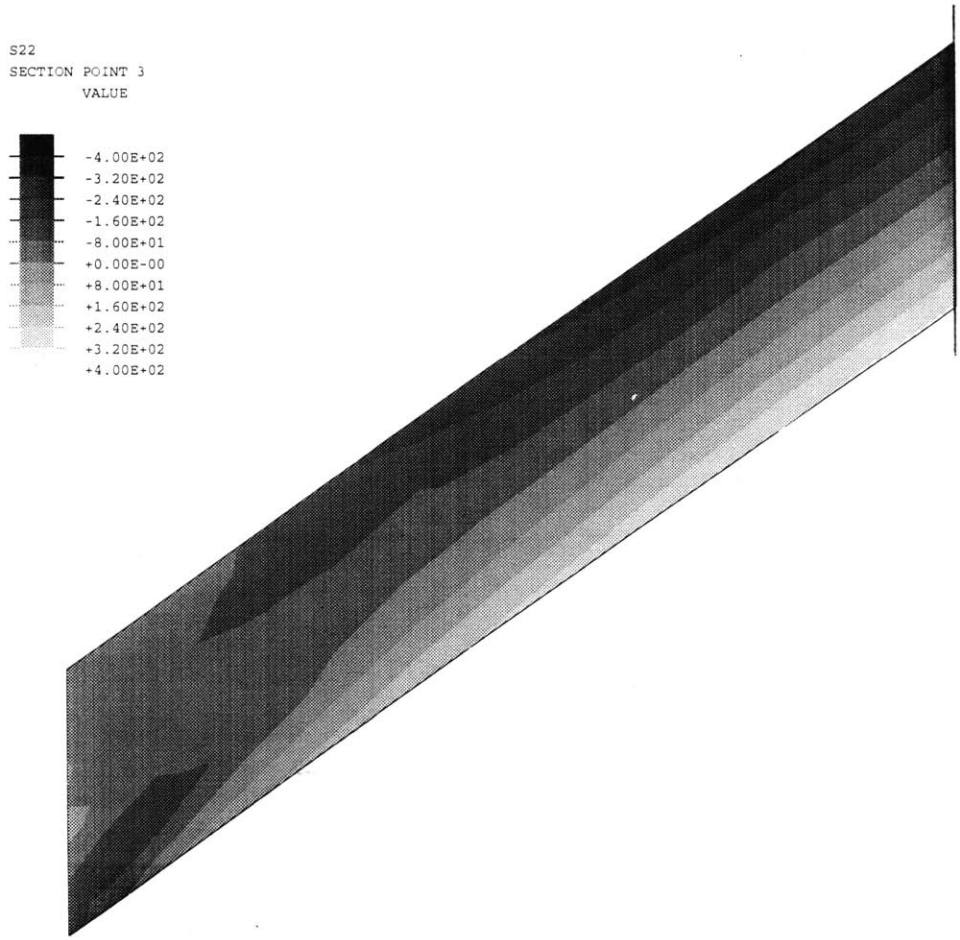

Figure 6.20
Axial Stress Map of Half of the OSB in a Wood I-Beam with Poisson's Ratios Set at Zero

The same effect is also noticeable at the points of supports. High stress concentrations are visible in the lower corners of the stress maps for both the ridge beam and the wood I-beam. However, this stress concentration did not completely disappear when Poisson's ratio was set at zero. (Figure 6.20) The compressive stress seemed to follow a diagonal path across the end of the beam.

This compressive "crossover" reflects the nature of the load path in a deep beam. Because the span to depth ratio in both the wood I-beam and the ridge beam is less than 7:1, their behavior is similar to a shallow tied arch. (Figure 6.21) Also apparent, more so in the ridge beam than the wood I-beam, is the alternative behavior in a deep beam, like a buttressed cable. (Figure 6.22) This causes tension in the upper corner of the beam, as is visible in Figure 6.18.

Figure 6.21
Deep Beam as a Tied Arch

Figure 6.22
Deep Beam as a Buttressed Cable

The effect of this crossover is not detrimental to the behavior of the beam because the stresses are highest at midspan, but it could be reduced with the addition of diagonal bracing. To demonstrate this, a diagonal wood strut was added to the wood I-beam from the lower left corner to the upper chord, where the first load is applied. (Figure 6.23)

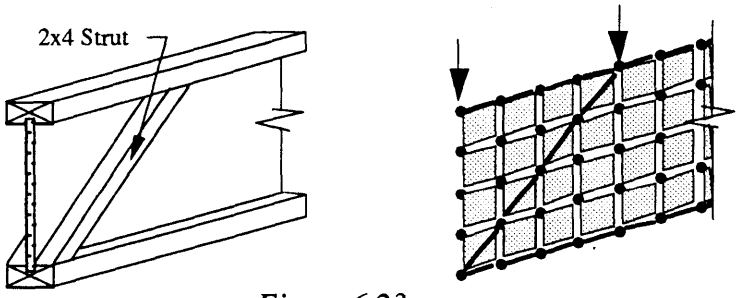

Figure 6.23
2x4 Diagonal Strut on the Wood I-Beam Model

This addition substantially reduced the stresses in the OSB across the last bay. (Figure 6.24) However, the real benefit of this bracing, the reduction in shear, will be discussed later.

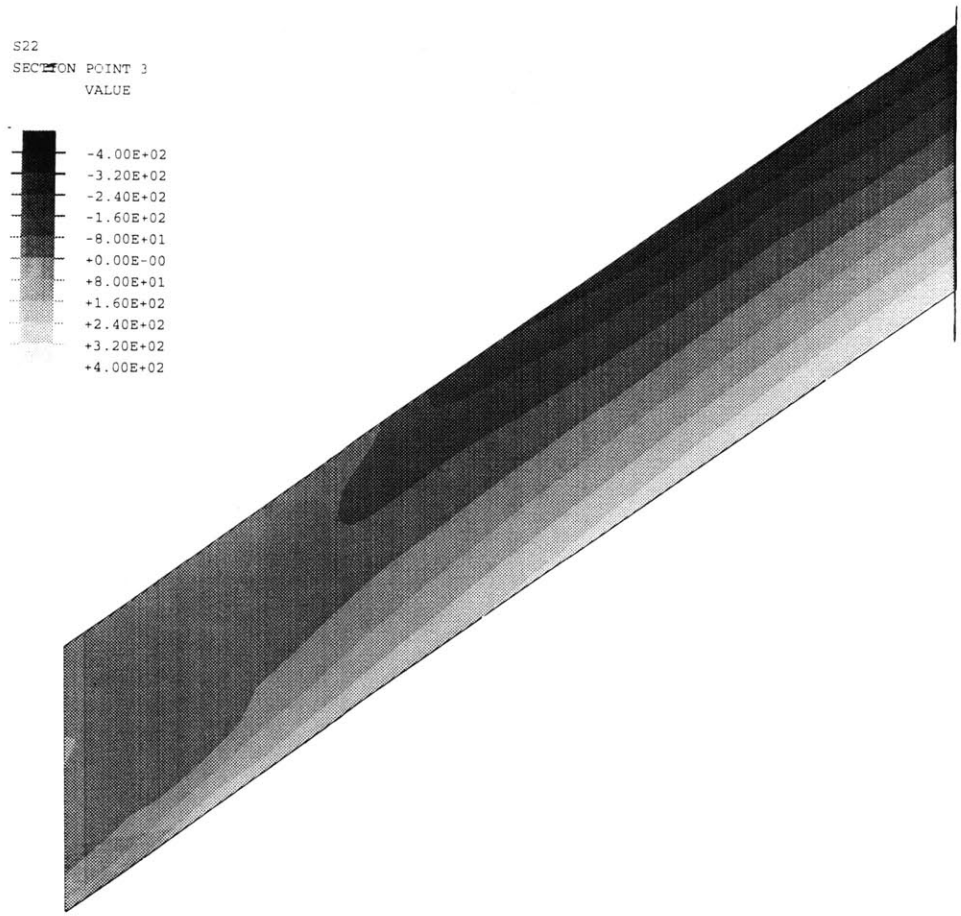

Figure 6.24
Axial Stress Map of Half of the OSB in a Wood I-Beam with a Diagonal Bracing in the Last Bay

The next issue that was examined was the transverse stress in the OSB. Again, the stress maps for the ridge beam and the wood I-beam are similar. (Figures 6.25 and 6.26) The most notable thing about both maps is that the stresses are very over the most of the beam. The exception to this is, of course, under the loads and above the supports.

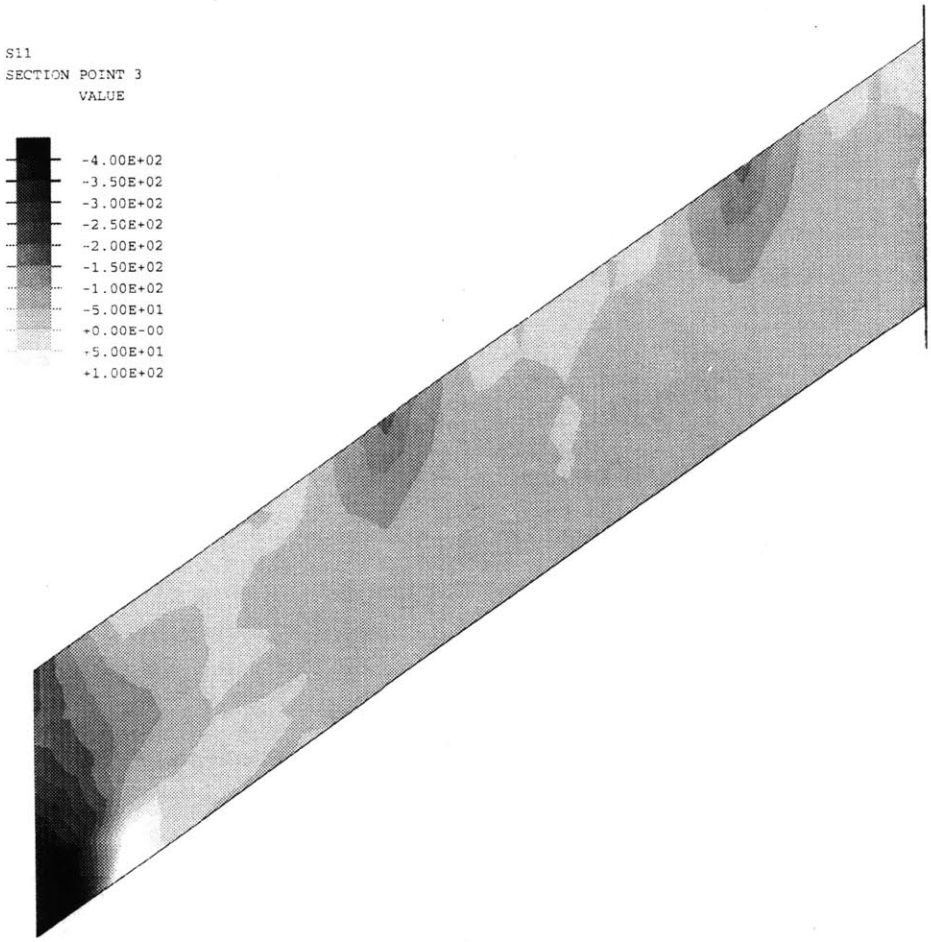

Figure 6.25

Vertical Axial Stress Contour Map of Half of the OSB in a Wood I-Beam

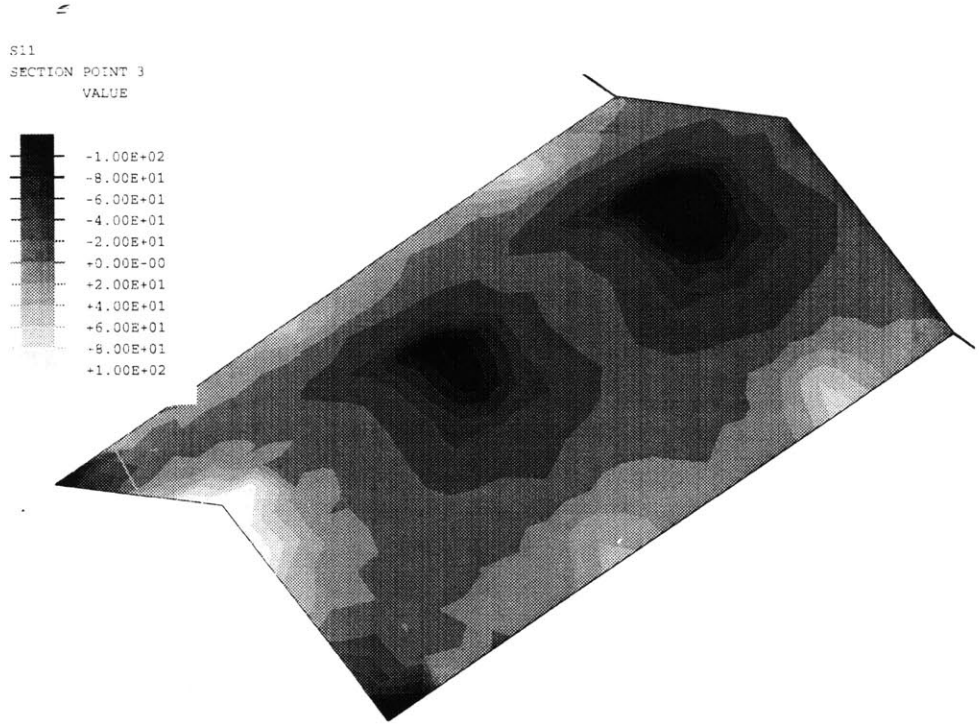

Figure 6.26

Transverse Stress Map of Half of the Top OSB Sheathing on the Ridge Beam

High compressive stresses occur at the points where the loads are applied, but they quickly dissipate through the OSB. This distribution is allowed by the shear between elements. When an element is loaded axially, it is resisted both axially and through shear. The elements next to the load distribute their portion of the load in the same way. (Figure 6.27) With this process the loads are quickly distributed through the OSB.

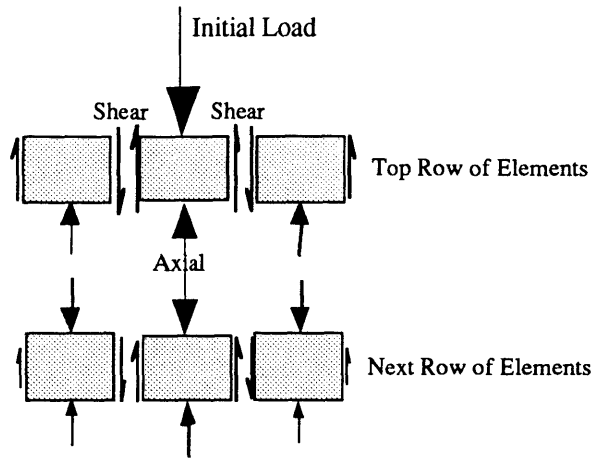

Figure 6.27
Load Distribution through Axial and Shear Stress Transfer

Another attribute in both transverse stress maps is that a little bit of tension develops between the loads. This is especially noticeable in the wood I-beam at the bottom corner. The phenomenon is caused by the MSR behaving as a beam on continuous *soft* supports. Where a load is applied, there is positive bending in the MSR. However, because of the continuity at each node, this positive bending causes negative bending in the elements outside the area affected by the load. In this way, the load is transferred across the top of the beam, like a wave. Because the MSR is stiffer than the OSB, this negative bending puts the OSB in tension. (Figure 6.28)

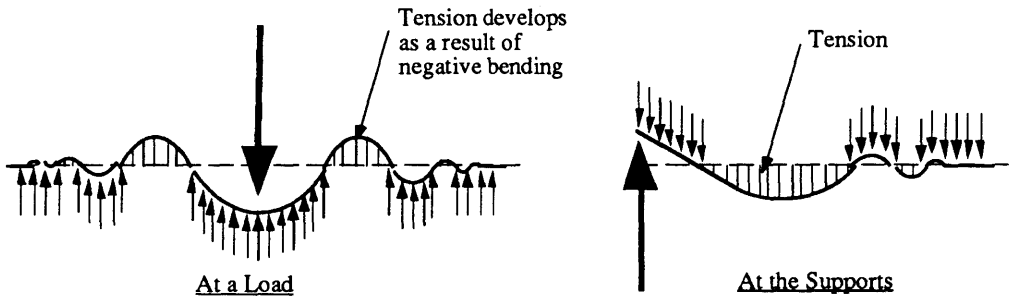

Figure 6.28
Analogy to a Beam on Continuous Soft Supports

One characteristic seen in the stress map of ridge beam (Figure 6.26) that is not apparent in the wood I-beam is the high tensile stress in the top corner. This is not seen in the wood I-beam because it is primarily due to the unique shape of the ridge beam and the way loads are transferred into the supports. Examining the end of the ridge beam reveals that most of the load from the roof is transferred through the OSB to the end truss. This intense accumulation of stress causes tension at the top corner, where the two sides are pulling against each other, and compression at the bottom corners, where the OSB is constrained by the supports. (Figure 6.29)

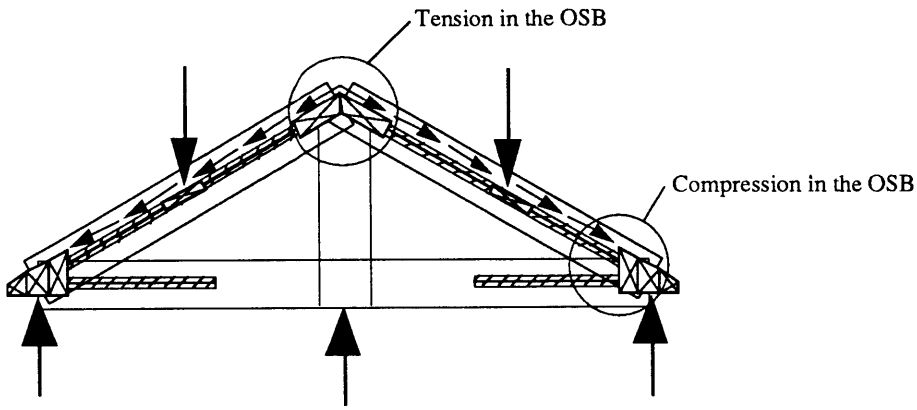

Figure 6.29
FEM Diagram of the End of the Beam

The last issue that was examined in the top OSB was shear. Again, the shear stress maps of the ridge beam and the wood I-beam are quite similar. (Figures 6.30 and 6.31) The coding of these stress maps is somewhat different than for the previous maps. For the ridge beam, the lighter colors indicate positive shear stress, increasing in magnitude as the tone becomes lighter, while the darker tones indicate negative shear stress, again increasing in magnitude as the tone darkens. A change in signs in evident in the ridge beam, but the magnitude of the stresses is the same on each side. For the wood I-beam, there is no negative shear stress. Therefore, the darkest tone is simply the least stress.

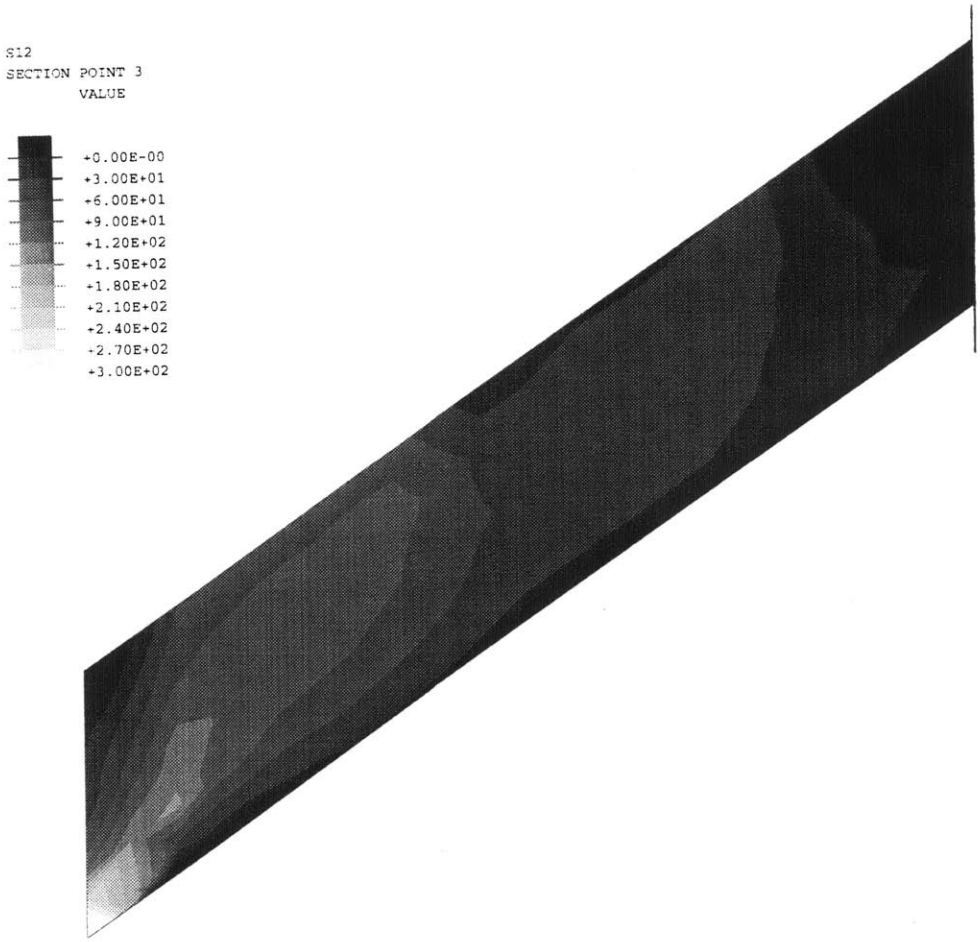

Figure 6.30

Shear Stress Contour Map of Half of the OSB in a Wood I-Beam

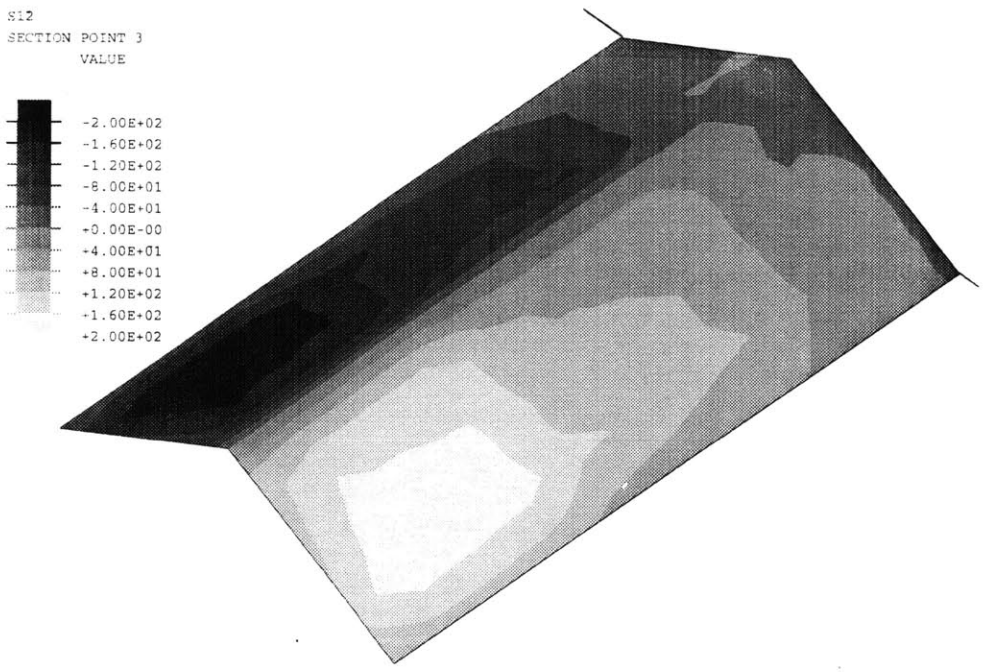

Figure 6.31

Shear Stress Map of Half of the Top OSB Sheathing on the Ridge Beam

Each map shows an increase in stress in the last bay, where the shear reaches its maximum. (Figure 6.32) Furthermore, the stress distribution across the OSB is roughly parabolic, as expected. (Figure 6.33)

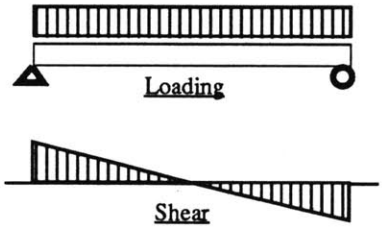

Figure 6.32
Typical Shear Diagram

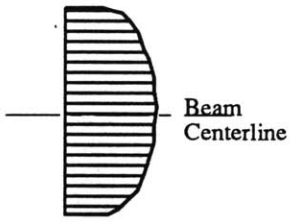

Figure 6.33
Typical Shear Stress Distribution

The only deviation from what is expected is that the stress distribution is skewed slightly toward the top or bottom, depending on the location relative to the nearest load. The cause of this is that loads are transferred through the beam partly through shear, as discussed previously. (Figure 6.27) Near a load, this additional shear skews the distribution away from purely parabolic. (Figure 6.34)

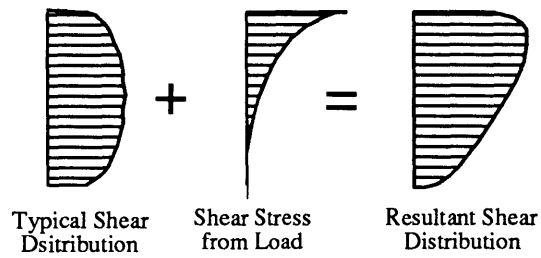

Figure 6.34
Resultant Shear Distribution in FEM

Although for certain cases, including the IBACoS House, the shear stresses in the top sheathing of the ridge beam are within the allowable stresses for OSB (Weyerhaeuser, 1988), the high concentrations represent a limiting factor. To reduce these stresses, diagonal struts were added to the ridge beam model. (Figure 6.35) These diagonal 2x4's connected the bottom corners of the ridge beam to the top of the next truss, thus taking the diagonal compression associated with shearing in the last bay of the OSB.

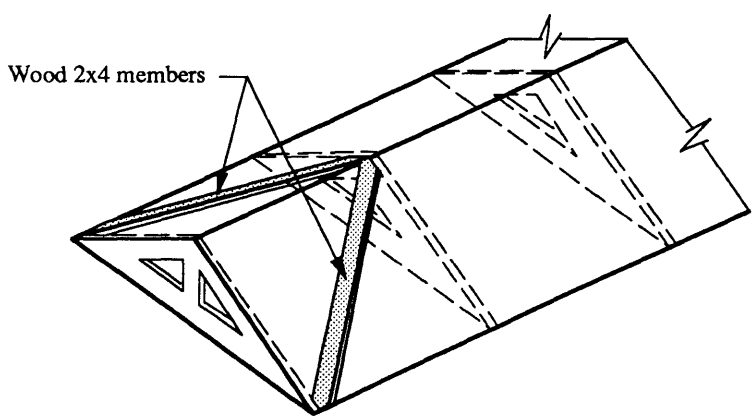

Figure 6.35
Diagonal 2x4 Struts in the End Bay

This configuration was tested, and the results showed that the struts reduced the shear stress in the OSB sheathing by roughly 40%. (Figure 6.36)

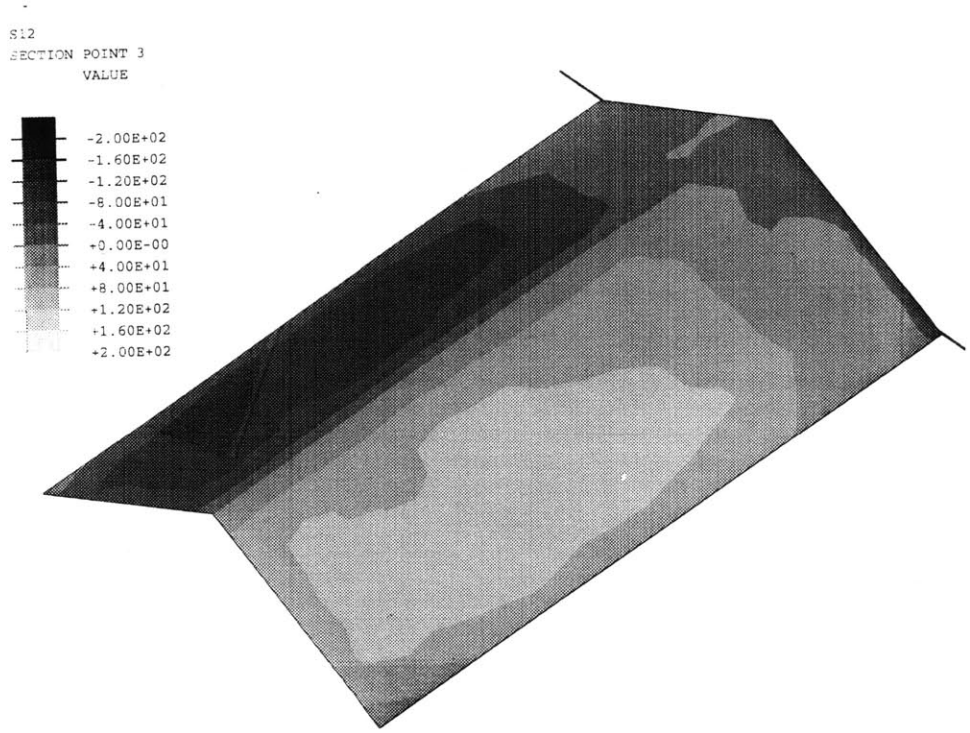

Figure 6.36
Shear Stress Map of Half of the Top OSB Sheathing on the Ridge Beam with Diagonal 2x4 Struts

In addition to reducing the shear stress in the OSB, the diagonal struts also alter other aspects of the behavior of the ridge beam. First , the axial stress "crossover" that was discussed previously is noticeably reduced. (Figure 6.37)

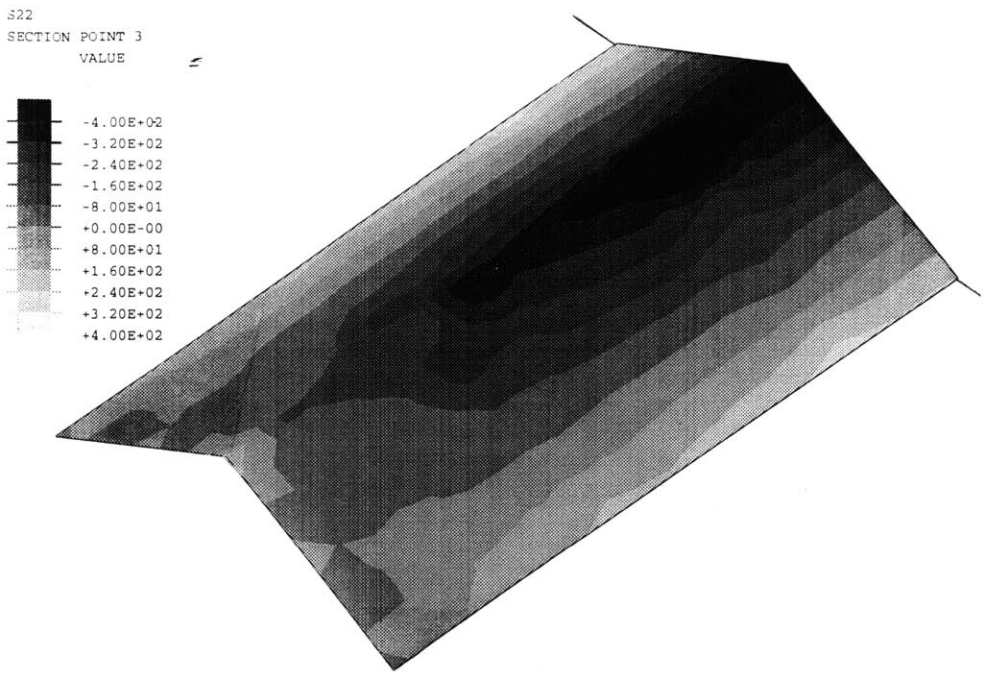

Figure 6.38
Axial Stress Map of Half of the Top OSB Sheathing on the Ridge Beam with Diagonal 2x4 Struts

Second, because of the angle of the struts, there is an increased outward thrust at the supports. (Figure 6.39) This additional thrust aggravates some the problems that were discussed earlier. The tensile force in the bottom chord of the end truss increases with the use of the struts, as does the shear in the bottom pieces of OSB. However, for the IBACoS ridge beam both of these conditions were acceptable, as the stresses did not exceed the allowable.

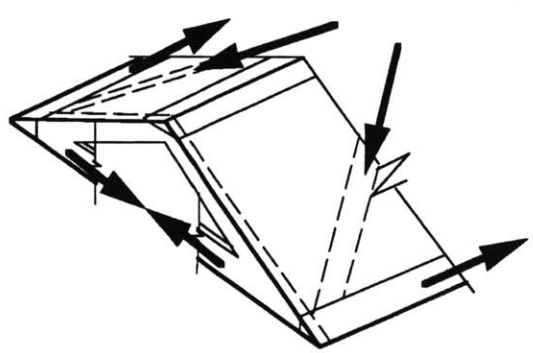

Figure 6.38
Additional Forces Caused by the Diagonal Struts

The MSR Stringers

Like the top pieces of OSB, the MSR stringers experience complex interactions with the other elements. Because of this, initially the behavior of the stringers was also difficult to understand. To help in this matter, the wood I-beam was again used as a tool to investigate the anomalies seen in the analysis.

The first issue that was considered was the axial force in the MSR stringers. (Figures 6.39 and 6.40) Again, negative numbers represent compressive forces while positive numbers represent tensile forces.

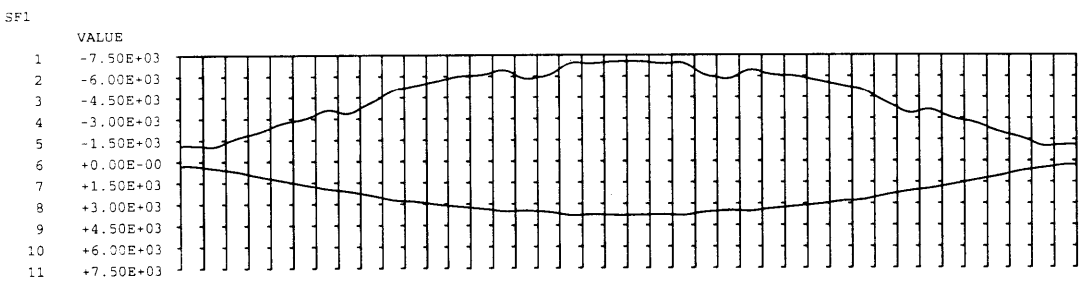

Figure 6.39
Axial Force in the MSR Stringers on the Ridge Beam

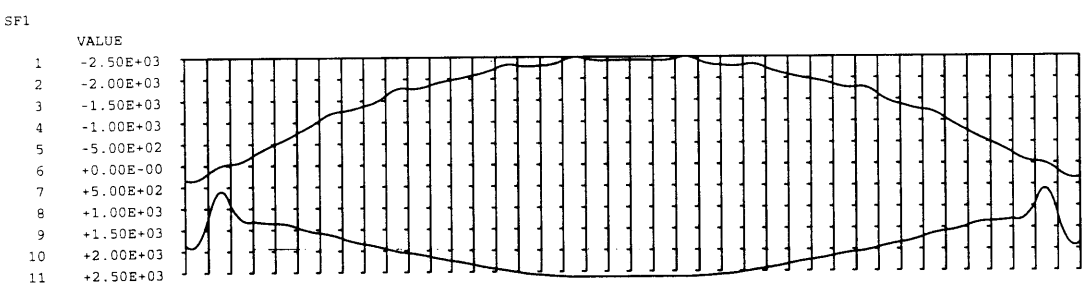

Figure 6.40
Axial Force in the MSR Flanges on the Wood I-beam

As expected, both graphs show the force in the stringers increasing from nearly zero to a maximum value at midspan. However, several anomalies in each graph exist. First, the top stringer on the ridge beam has much more force in than the bottom stringers. This is a function of the location of the neutral axis in the ridge beam.

Second, the graph of the ridge beam shows that neither the compressive nor the tensile forces goes completely to zero. There is some residual force at the end of the stringers that is somehow being resisted. In the wood I-beam this situation seems to be even worse. The top flange drops below zero and into tension, while the forces in the bottom flange fluctuate at the end.

The fluctuation in the bottom flange of the wood I-beam stems partly from modelling it with cubic beams. The cubic shape function is forced to fit data points that are relatively close together, resulting in an exaggerated curve. To verify this, the wood I-beam was modeled with linear beams for the flanges. The results demonstrated that the fluctuations diminished, but were still present. (Figure 6.41)

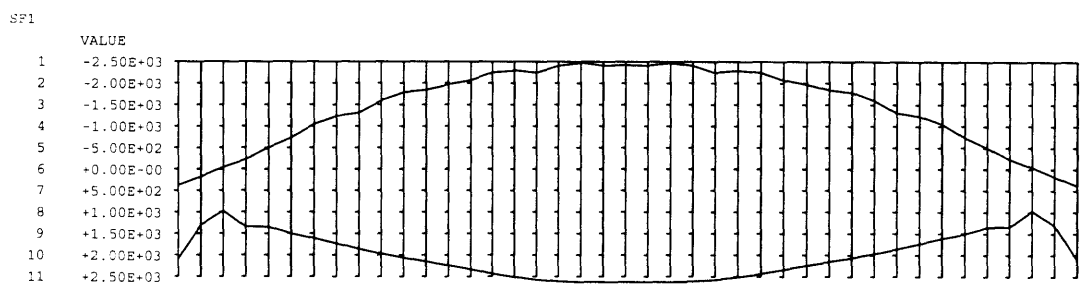

Figure 6.41
Axial Force in the MSR Flanges on the Wood I-Beam Modeled with Linear Beams

Another explanation for the fluctuations and the residual forces is Poisson's effect. Because the MSR is stiffer, it will resist the expansion that occurs in the OSB due to a load being applied to it. (Figure 6.42)

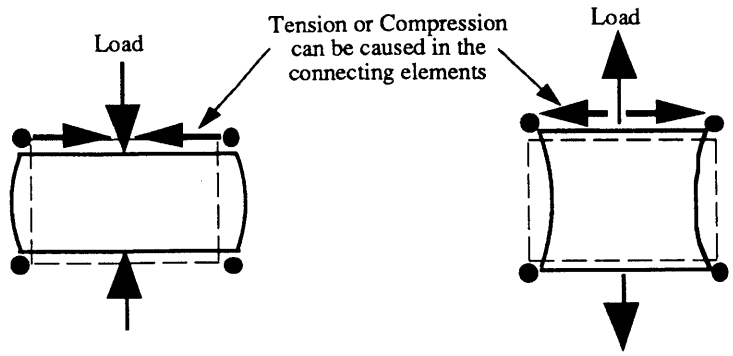

Figure 6.42
Forces the Stringers Caused by Poisson's Effect

To test this, Poisson's ratio was again set at zero, and the residual force in the stringers dropped nearly to zero, as expected. (Figure 6.43)

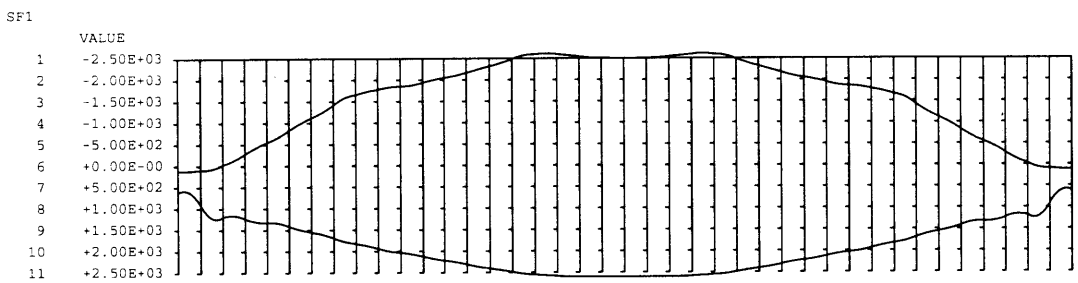

Figure 6.43
Axial Force in the MSR Flanges on the Wood I-Beam with Poisson's Ratios Set at Zero

Another of the peculiarities in the axial force graph for the ridge beam (Figure 6.40) is the presence of discontinuities in the top stringer at the loads. This behavior is also detectable in the wood I-beam, although not as extreme. It is attributable again to Poisson's effect. (Figure 6.42) The tension created by Poisson's effect reduces the compression in the elements near the load. Without this effect (Figure 6.43), the graph of the forces in the top chord simply represents the idealized moment diagram for a beam under point loads.

The next issue was the bending moments in the MSR stringers, the most striking aspects of which were the dramatic spikes that occur at the loads. (Figure 6.44)

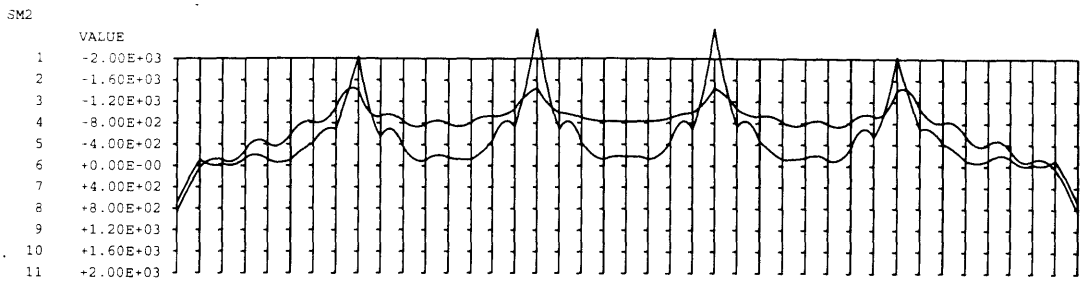

Bending Moment in the MSR Stringers on the Ridge Beam

The same spikes also appear in the graph of the wood I-beam's flanges. (Figure 6.45)

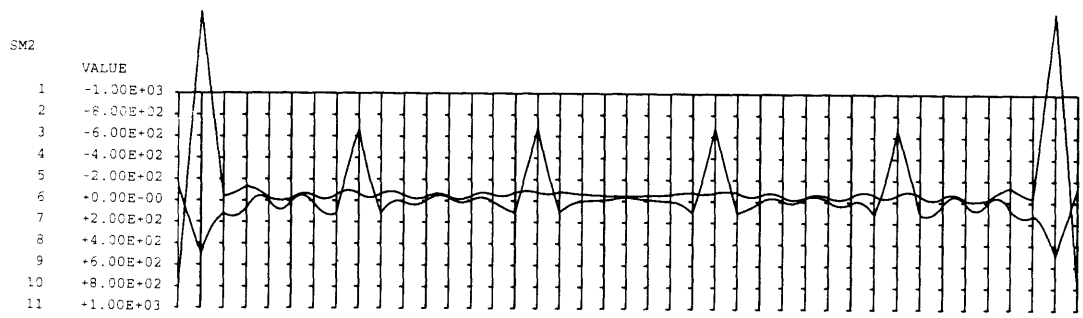

Figure 6.45
Bending Moments in the MSR Flanges on the Wood I-Beam

The spikes in the bending moment within the stringers have been attributed to the same phenomenon that caused the tension in the transverse stress in the OSB. The stringers, which are essentially on soft supports, experience a high positive bending moment locally. This positive bending then causes some negative bending (refer to Figure 6.28), producing the wavy lines in Figures 6.44 and 6.45.

When the diagonal struts, discussed earlier, were added to the FEM the residual tensile forces in the bottom stringers increased, as additional forces were transferred to the bottom corners of the ridge beam. (Figure 6.39) Furthermore,

because the behavior of the ridge beam becomes more truss-like, the compressive force in the top stringer dropped in the last bay. (Figure 6.46)

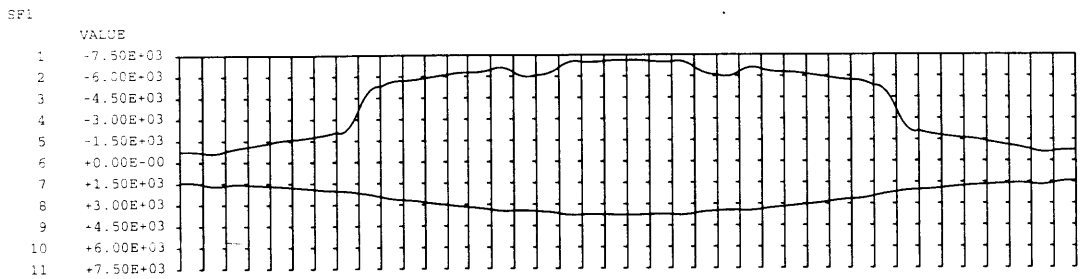

Figure 6.46
Axial Force in the MSR Stringers on the Ridge Beam with 2x4 Diagonal Struts

Findings from the FEM under Gravity Loads

This analysis, has greatly enhanced our understanding of the behavior of the ridge beam, and several observations have led to design modifications. The addition of the kingpost to the trusses above the supports has proven to be very important to the structural performance of the roof system. It was employed in the IBACoS House, and it was easy to accommodate in the manufacturing process. On the other hand, the 2x4 diagonal struts were not added to the IBACoS ridge beam, and therefore, it is not known how they might affect the manufacturing process. They will, however, substantially reduce the shear stress experienced in the top OSB sheathing.

This chapter has dealt solely with gravity loads, but as mentioned in Chapter 1, a very important function of the ridge beam is to transfer lateral loads to the supporting shear walls. The next chapter will examine this more carefully, again using the finite element method.

Chap. 7 *The Ridge Beam Subjected to Lateral Loads*

Lateral Loading

The preliminary investigation in Chapter 5 showed that lateral loads would probably not dictate the overall design in most parts of the country. However, where large lateral loads can occur, such as in high wind and earthquake zones, lateral load resistance may govern the design of the ridge beam.

Resistance to lateral loads is much less certain than gravity loads. Engineers are working to fully understand the loads that are created by high winds and earthquakes, and consequently, guidelines, calculation methods, and code requirements change continually. Furthermore, most builders and contractors lack an intuitive sense for how lateral loads are resisted. Because of this, most of the structural failures that are seen today are due to wind or earthquakes.

Although wind and earthquake loads are classified together as lateral loads, they are actually quite different. One major difference lies in whether the load exerts a vertical component or not. Earthquake loads arise from the inertia of a structure due to ground accelerations. As the ground motion is assumed to be

horizontal, the loads caused by it are horizontal as well. For the ridge beam, this means that the inertial loads from the roof panels, and sometimes part of the walls, need to be resisted when the earth moves perpendicular to the ridge beam. (Figure 7.1) This results in a horizontal load that is applied at the point of attachment for the roof panels. (Figure 7.2)

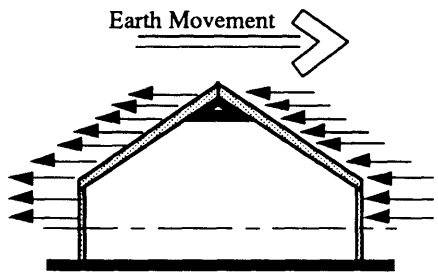

Figure 7.1
Inertial Load Due to Earthquakes

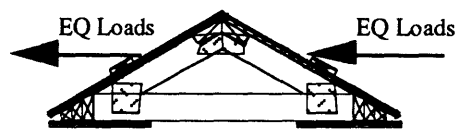

Figure 7.2
Earthquakes Loads on the Ridge Beam

The forces caused by wind depend on the shape of the building. If the wind blows on a surface perpendicular to its direction, the force it exerts pushes inward. However, as the wind passes by surfaces that are oblique or parallel to it, suction is created. (Figure 7.3)

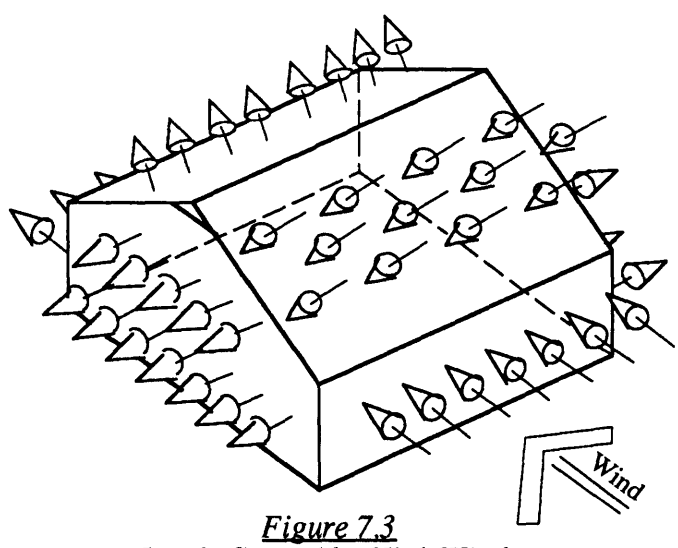

Figure 7.3
Loads Caused by High Winds

As the wind blows perpendicular to the ridge beam, it causes an inward force on the windward side of the roof and an outward force on the leeward side of the roof, both of which are normal to the roof surface. (Figure 7.4) Therefore, the loads include both a horizontal and a vertical component, and the net vertical component must account for dead loads, as well. (Figure 7.5)

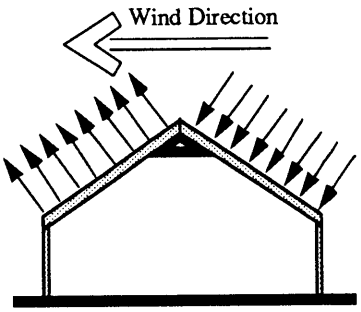

Figure 7.4
Loads on the Roof Due to Winds

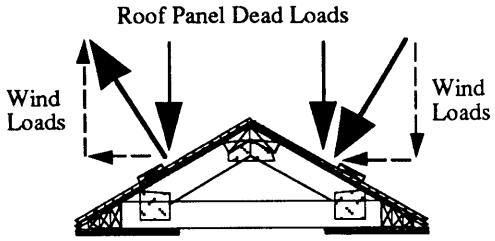

Figure 7.5
Wind Loads on the Ridge Beam

Consequently, all of the horizontal loads and roughly half of the vertical loads caused by wind are resisted by the ridge beam. (Figure 7.6) The other half of the vertical loads are resisted by the exterior walls of the house, which offer vertical support, but in the worst case are assumed to offer no horizontal support. A free body diagram of one side of the roof is shown. (Figure 7.7)

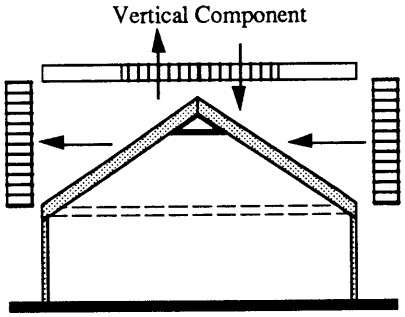

Figure 7.6
Wind Loads on the Ridge Beam

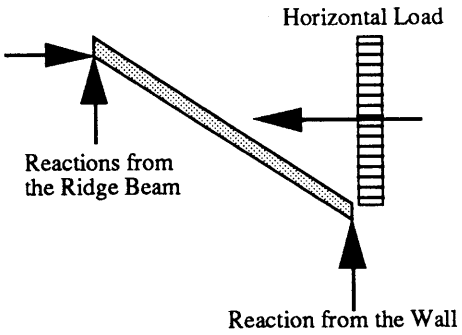

Figure 7.7
Free Body Diagram of a Roof Panel Subjected to Lateral Loads

The FEM for Lateral Loads

The finite element model was used again to examine the ridge beam behavior under lateral loads. The FEM itself is essentially the same as that used to analyze the ridge beam under gravity loads. The mesh is the same, but the loading and the boundary conditions have been changed. The constraints imposed on the FEM included one at the midpoint of the top of the beam, which prohibits movement along the y-axis, one at the midpoint of the bottom chord of each end truss, which prevented movement along the x-axis, and a series of vertical constraints across the bottom of the ends. (Figure 7.8)

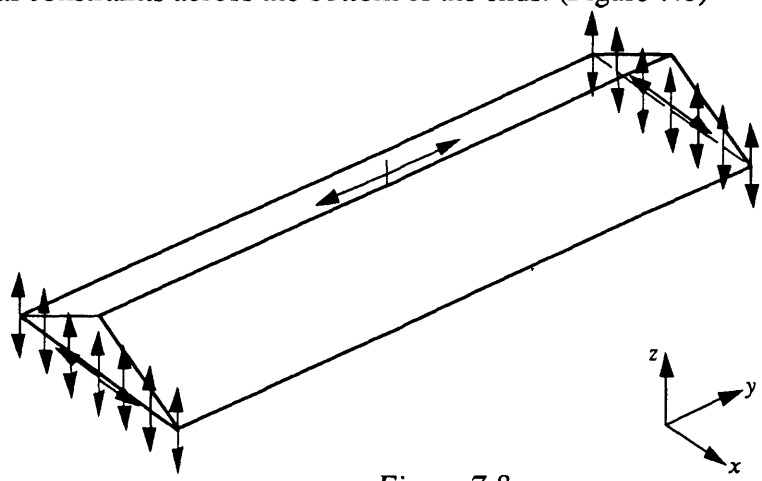

Figure 7.8
Boundary Conditions Imposed on the FEM for Lateral Loading (arrows indicate that motion in that direction is constrained)

The loading of the FEM was obviously different than that used for gravity loads. The beam was loaded in two different ways to simulate the different types of lateral loads that it might experience. First, it was loaded as if the roof from the IBACoS house (34'-0" wide, 13'-0" long, 7:12 pitch) was constructed in an area classified as earthquake Zone 4 (UBC, 1988) and with a snow load of 30 psf with the loads were applied horizontally. (Figure 7.2)

The second condition simulated the loads that would be experienced if the same roof were located in an area with little or no protection from the wind (Exposure "C" in the UBC, 1988) and subjected to 110 mph wind. For this, loads were applied in both the horizontal and vertical directions. (Figure 7.5)

At first glance, the results of these two loading conditions seemed to be essentially the same, as the graphs of the axial force in the bottom MSR stringers indicate. (Figures 7.9 and 7.10)

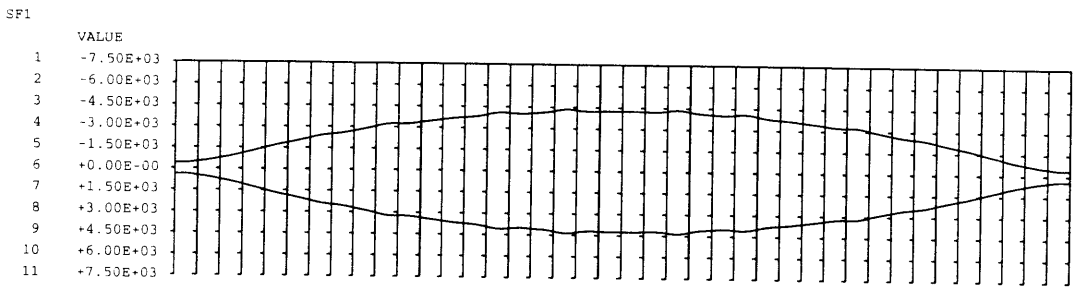

Figure 7.9
Axial Force in the Bottom Stingers of the Ridge Beam Under Earthquake Loads

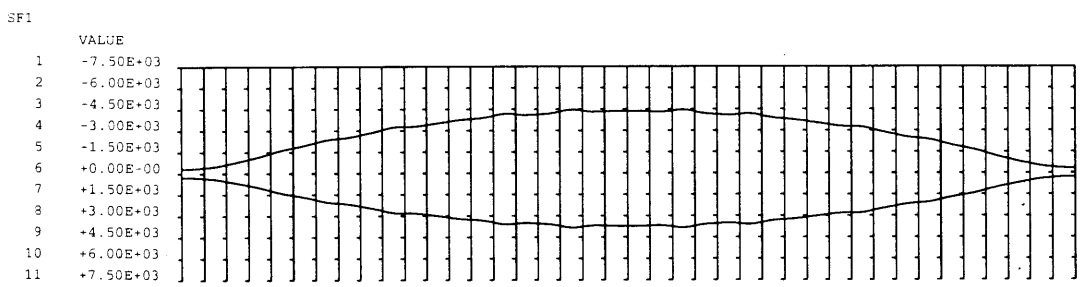

Figure 7.10
Axial Force in the Bottom Stingers of the Ridge Beam Under Wind Loads

Both graphs show the compressive force and the tensile force climbing from nearly zero to a maximum at midspan. (compression is negative and tension is positive) The small amount of residual force in each of the stringers and the minor discontinuities at the loads can be attributed to Poisson's effect, as discussed in Chapter 6.

However, when other issues were examined, it became obvious that the two loading conditions were not the same. In fact, the wind loads turned out to be much worse. Consequently, most of the following analysis will refer to the wind loading. However, where earthquake loads present a unique problem, they were considered also.

Important Issues with Regard to Lateral Loads

This detailed investigation of lateral loading has revealed many weaknesses in the design of the ridge beam. Just as the preliminary analysis of the ridge beam for gravity loads left some issues open, many issues with regard to lateral loads have been clarified through a more careful examination.

The first issue that has become better understood is torsion. Because of the way the lateral loads are resisted by the ridge beam and the way the loads are applied, torsion develops within the beam. Torsion is not usually a major consideration in the design of buildings, especially in wood frame construction, because most components are oriented to resist either vertical loads or horizontal load, but not usually both. The torsion that develops in the ridge beam is a result of its triangular shape and the effort to address both horizontal and vertical loads. A full understanding of this was not possible prior to the investigation with the FEM.

Another issue that has been clarified since the preliminary analysis in Chapter 5 is the stress in the OSB sheathing. Because of complex interaction within the ridge beam, these stresses were not well understood. It was anticipated that all of the sheathing would contribute to the bending strength of the beam by resisting in-plane bending, but the extent to which this would happen was not known.

The third item that needed a more careful examination was the design of the internal wood trusses. As explained in Chapter 6, the 3-dimensional interaction between the elements that make up the ridge beam made the analysis of the trusses very difficult. Furthermore, the wind loads are applied perpendicular to the top of the trusses, and therefore the bending moment in the top chords might be higher than it was for gravity loads.

Torsion

Torsion develops because the way the lateral loads are resisted by the ridge beam. Like vertical loads, horizontal loads are resisted by both the MSR stringers and the OSB's resistance to in-plane bending. (Figure 7.11) However, the OSB's resistance contains within it a vertical component as well as a horizontal component. This causes the leeward side of the ridge beam to pull up and the windward side to push down, resulting in a rotational moment. This moment is amplified when the vertical components caused by wind loads are added.

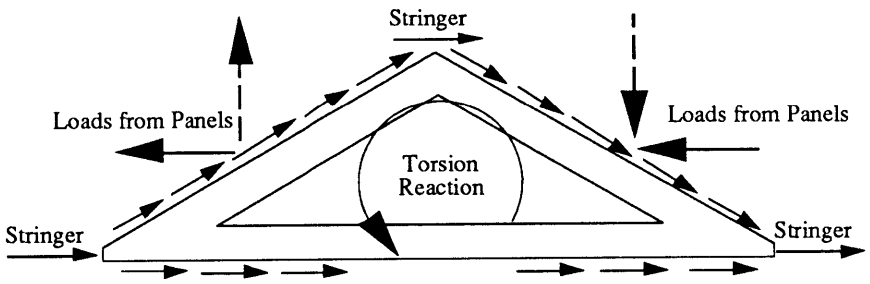

Figure 7.11
Free Body Diagram over the Span of the Ridge Beam

The torsion builds up from the center of the beam to the end, where it all must be resisted by an equal and opposite rotational force. (Figure 7.12)

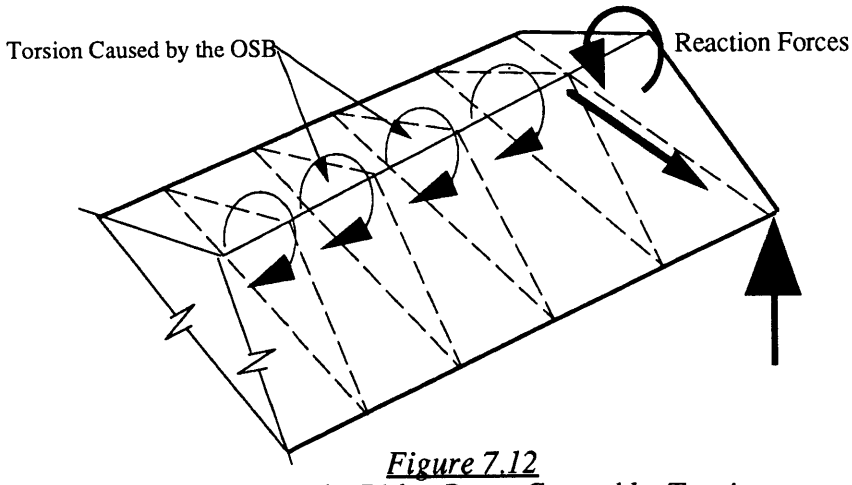

Figure 7.12
Twisting in the Ridge Beam Caused by Torsion

At the end of the beam, this opposite rotation is provided by the two vertical reactions, one up and one down, and the moment couple of the horizontal reaction and the load from the last panel. (Figure 7.13)

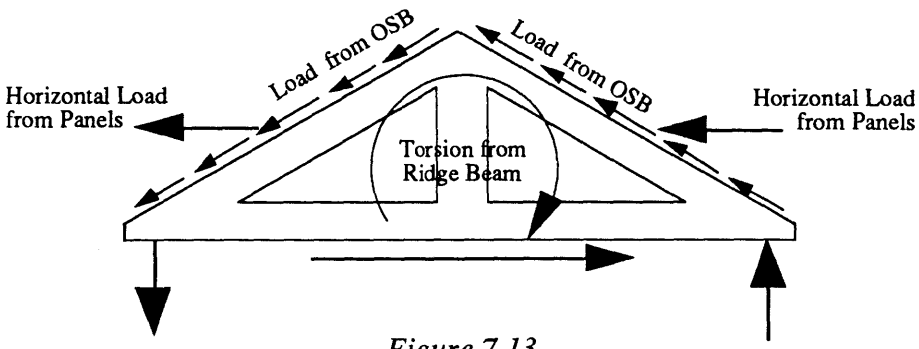

Figure 7.13
Free Body Diagram at the End of the Beam

The result of this behavior, a large torsional reaction at the end countered by small amounts of torsion as the loads are applied, is a torsion diagram that closely the shear diagram for vertical loading. (Figure 7.14)

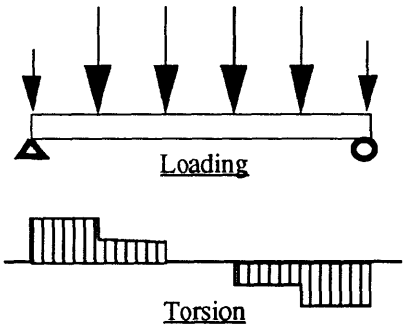

Figure 7.14
Expected Torsion Diagram of the Ridge Beam

Resistance to torsion comes from each element's ability to withstand twisting. It is reflected in its polar moment of inertia, J, adjusted with a factor for each material's stiffness. The polar moment of inertia, which is similar to the moment of inertia about either the x-axis, I_x, or the y-axis, I_y, is computed by:

$$J = \int r^2\, dA = \int (x^2 + y^2)\, dA = \int x^2\, dA + y^2\, dA \qquad (7.1)$$

which can be simplified to:

$$J = I_y + I_x \qquad (7.2)$$

When the modulus of rigidity for each material is incorporated into Equation (7.2) to account for varying stiffnesses, it becomes:

$$J = GI_y + GI_x \qquad (7.2a)$$

Resistance to torsion comes from two sources: an element's shape and its rigidity. In the ridge beam, this resistance comes from both the stringers and the OSB sheathing.

When FEM of the ridge beam was analyzed under lateral loads, it became apparent that the torsion in the ridge beam is actually quite high. The plot of the displaced mesh shows the twisting caused by this torsion. (Figure 7.15)

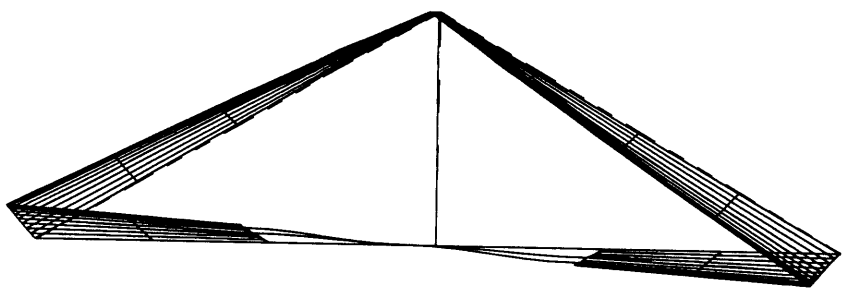

Figure 7.15
End View of the FEM Displaced by Wind Loads

A great deal of this is resisted by the stringers, as they are much stiffer than the OSB, and consequently, the internal torsional stress in the stringers is high, especially at the ends. (Figure 7.16)

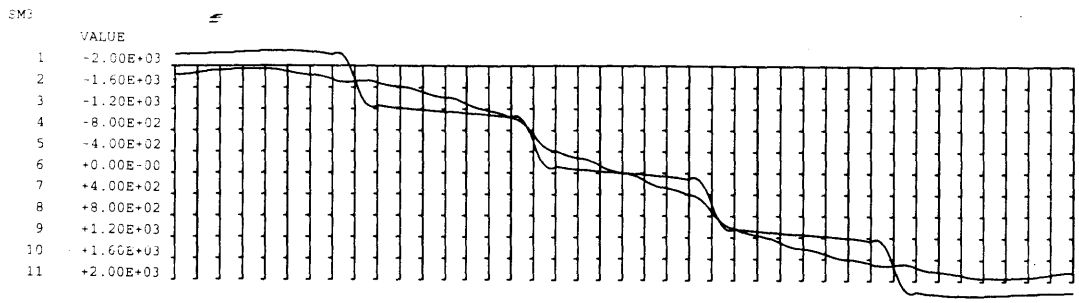

Figure 7.16
Torsion in the MSR Stringers Caused by Wind Loads

The maximum allowable torsional stress, F_τ, of most species of wood is the same as its maximum allowable shear stress, F_v, usually between 80 and 95 psi. (FPL, 1974) In the IBACoS ridge beam, the stress, in all three stringers turned out to be more than twice the allowable stress for MSR. (MSR,1992)

The OSB Sheathing

The first of the OSB's main functions, resisting in-plane bending, is revealed in the stress contour map of the top OSB sheathing. (Figures 7.17)

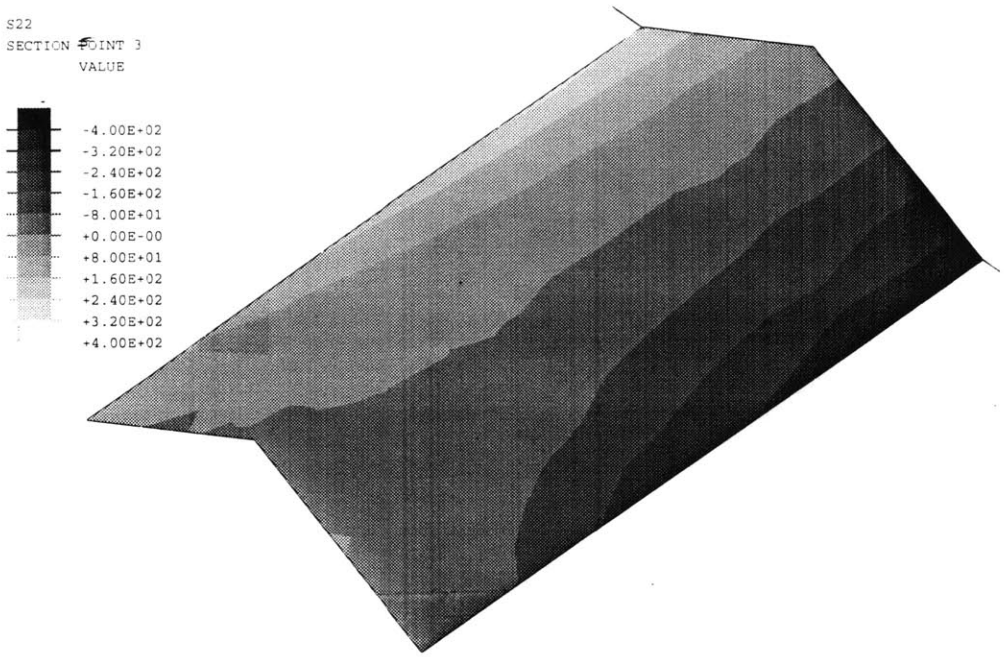

Figure 7.17
Axial Stress Contour Map of Half of the Top OSB Sheathing Subjected to Wind Loads

As in the contour map of the top sheathing under gravity loads (Figure 6.18), this map shows that the OSB experiences compressive stress on the right side of the beam and tensile stress on the left side, as the load is applied from right to left. However, the line of zero stress, the neutral axis, has shifted slightly to the right, primarily because of the twisting in the beam.

The bottom pieces of OSB are also involved in resisting the bending caused by lateral loads. In fact, because of their orientation, they are more involved than the top pieces. However, the OSB on the bottom is divided into two pieces, and therefore it has a lower moment of inertia. Consequently, the stress in the bottom is much higher than in the top. (Figure 7.18) The axial stresses in the bottom OSB on the IBACoS House ridge beam actually exceeded the allowable stresses. (Weyerhaeuser, 1988)

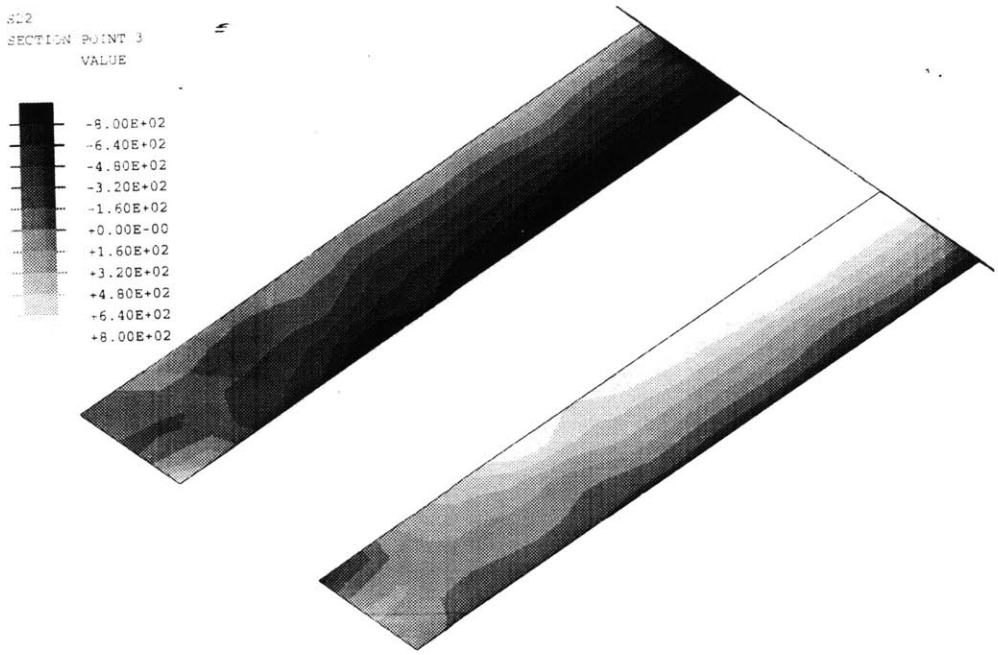

Figure 7.18
Axial Stress Contour Map of Half of the Bottom OSB Sheathing Subjected to Wind Loads

The stress map corresponds to what is expected as the loads are applied from the right. The right edges are in compression and the left are in tension. The small concentrations of stress at the inside corners are a result of the boundary condition imposed at the center of the end truss. They are caused by Poisson's effect, as discussed in Chapter 6.

The stress levels in the bottom are high because of the OSB's small moment of inertia and due to torsion. Another role of the bottom sheathing is to resist the torsion in the top sheathing. It provides this resistance mostly by resisting in-plane bending. Because of the torsion in the ridge beam, each side wants to rotate counter-clockwise. This action tends to push the top of the left side down and in, while it pulls the bottom up and out. Likewise, the top of the right side pulls up and out, while the bottom pushes in. (Figure 7.19) The free body diagrams of each side show that at the top of each piece, the reactions that prevent this rotation come from the other side. However, at the bottom the

reactions must come from the OSB as it resists in-plane bending. (Figure 7.20) This adds a horizontal load to the bottom OSB.

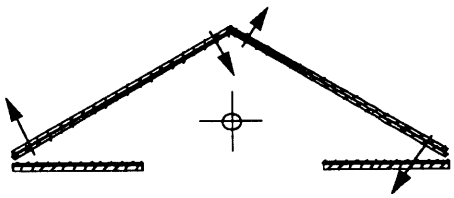

Figure 7.19
Top OSB's Tendency to Twist

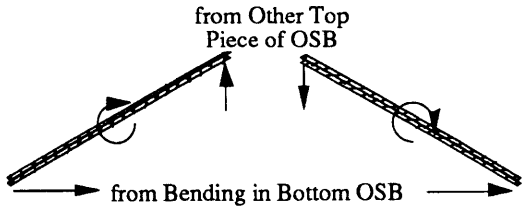

Figure 7.20
Free Body Diagrams of the Top OSB

Two options for reducing the stress in the bottom OSB exist. First, each piece could be made wider, increasing its moment of inertia, I_y. However, one of the important features of the ridge beam is that it allows easy access to the inside and the points of attachment for the panels. If the bottom pieces of OSB get much wider, they will impede this access. The other option is to simply prevent the torsion in the ridge beam from developing. This will be discussed later.

The other important role that the OSB sheathing plays is resisting shear. As the analysis in Chapter 6 showed, shear stress in the OSB is concentrated in the last bay, thus the need for diagonal struts. With lateral loads, the behavior is the same. The shear stress contour maps of the top OSB (Figure 7.21) and the bottom (Figure 7.22) demonstrate.

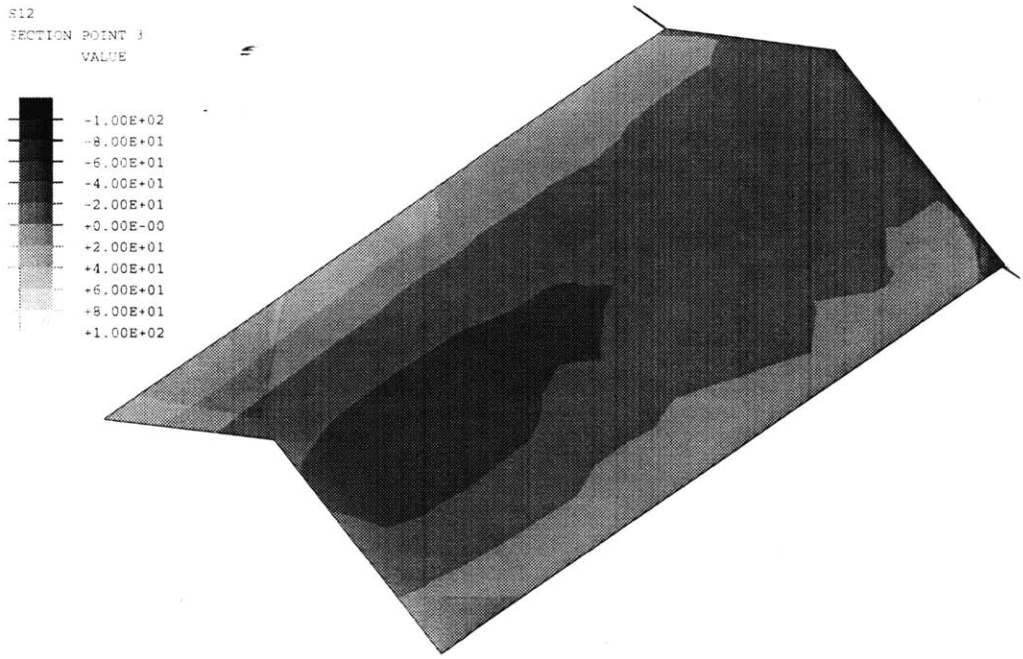

Figure 7.21
Shear Stress Contour Map of Half of the Top OSB Sheathing Subjected to Wind Loads

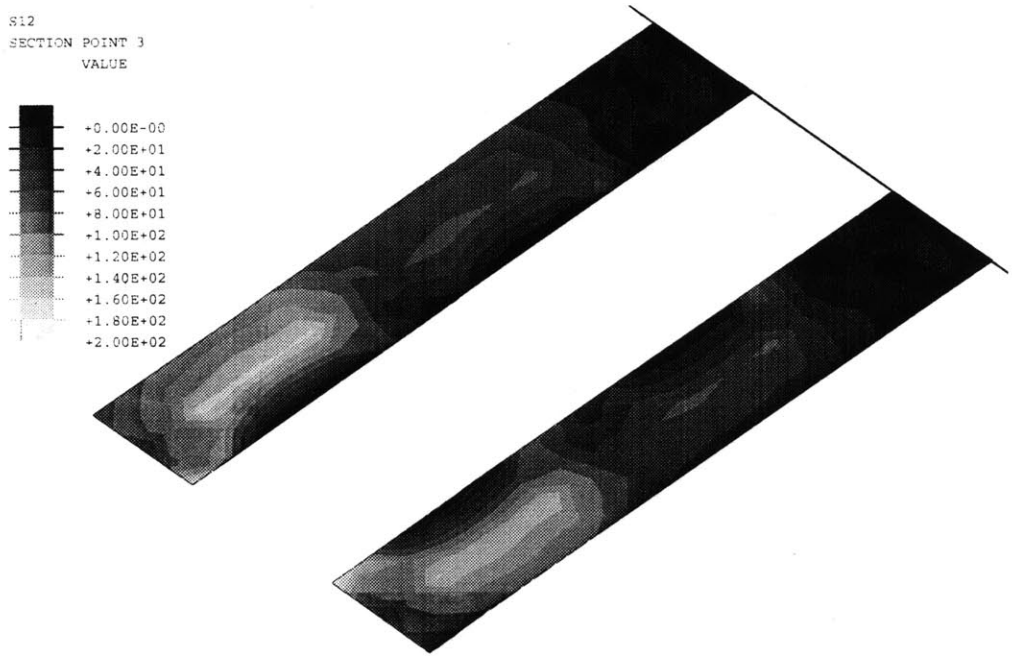

Figure 7.22
Shear Stress Contour Map of Half of the Bottom OSB Sheathing Subjected to Wind Loads

The stress in the bottom OSB is again quite a bit higher than the stress in the top. These high stress levels suggest the need either for diagonal bracing.

The Internal Trusses

Another surprising result of the FEM analysis was the amount of bending moment that occurs in the top chord of the internal trusses. The bending moment in the top chord of the third truss is 5500 in.-lbs., which would produces a bending stress of 1800 psi, much higher than the allowable stress for standard grade wood. (NFPA, 1991)

This high moment is partly the result of the loads being applied perpendicular to the the truss and at midspan, and partly due to the torsion in the ridge beam. To isolate the bending that is caused by torsion, the ridge beam was loaded at the bottom corners. When this test was performed, it showed a small amount of bending still present in the trusses, most of which was attributed to the torsion in the stringers. (Figure 7.23)

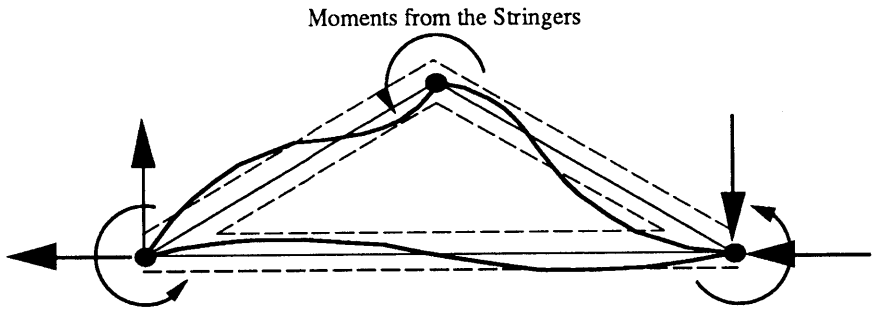

Figure 7.23
Exaggerated Deflection of the Center Trusses with Loads Applied at the Corners

There are two ways to reduce the bending moment in the trusses. First, the loads could be reduced simply by placing trusses more frequently. The other solution is to reduce the amount of torsion in the ridge beam.

Reinforcement of the Ridge Beam

All of the issues discussed previously relate to torsion. If this could be reduced, many of these problems would be solved. One way to do this would be to reinforce the ridge beam with diagonal members, similar to the way struts were used to reduce the shear caused by gravity loads. This would add rotational resistance to the OSB. When a flat plane, like the OSB twists, it forms a hyperbolic paraboloid. (Figure 7.24) In this shape, all of the lines parallel to the sides remain straight, explaining why neither the trusses nor the stringers help stiffen the OSB. However, diagonal lines are forced to curve. If 2x4 reinforcement was placed diagonally across these planes and oriented so that it resists this curvature, it could effectively supplement the stiffness of the OSB.

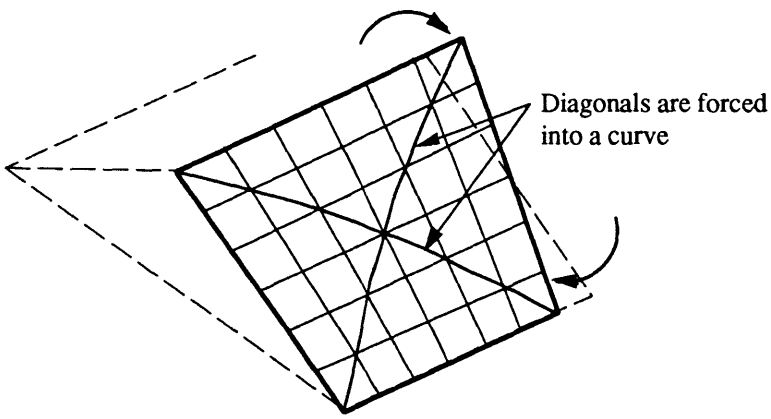

Figure 7.24
Hyberbolic Paraboloid Created by Twisting

The most obvious place to do this is in the last bay, where torsion is the highest. (Figure 7.16) Therefore, the strut that was discussed in Chapter 6 was reoriented to provide diagonal bracing on the sides. However, on the bottom it was not obvious where to put the reinforcement. The dilemma came from the fact that lateral loads come from all directions. If a diagonal was to be placed across the bottom of the beam in the last bay, it would tend to make the beam stiffer in one direction than the other. This bracing would carry axial forces because of the truss-like behavior it would create. However, due to the difficulty involved with making good tensile connections in wood, the bracing could carry much more compression than tension. (Figure 7.25)

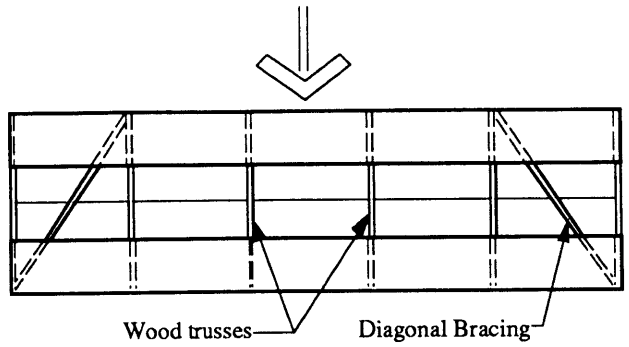

Figure 7.25
Bottom View of a Ridge Beam that Gives Precedence to One Direction

To balance the ridge beam, the bracing was placed in the form of a "chevron". (Figure 7.26) This allows loads from both directions to be resisted equally, while maintaining enough diagonal orientation to resist the bending caused by torsion.

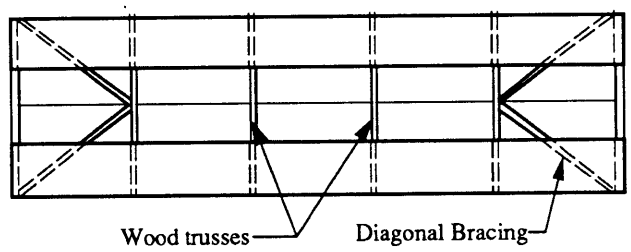

Figure 7.26
Bottom View of a Ridge Beam that Gives No Precedence to Direction

When this was added to the FEM and tested, the results showed that the torsion in the stringers was reduced by a factor of three. (Figure 7.27)

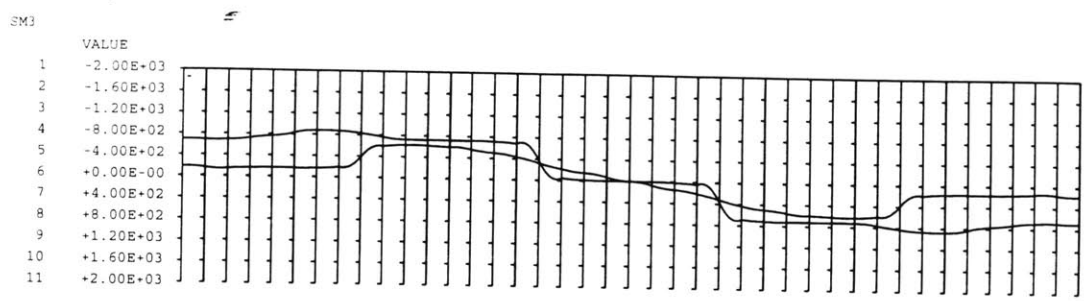

Figure 7.27
Torsion in the MSR Stringers with Diagonal Bracing

The torsion seen in the graph above, although greatly reduced is still too high. The highest torsion in the bottom stinger, 640 in.-lbs., would cause a stress of 101 psi, still higher than the allowable stresses for most species of wood. (NFPA, 1991) Therefore, more bracing would be required.

The diagonal bracing also substantially reduced the axial stresses in the bottom pieces of OSB. (Figure 7.28)

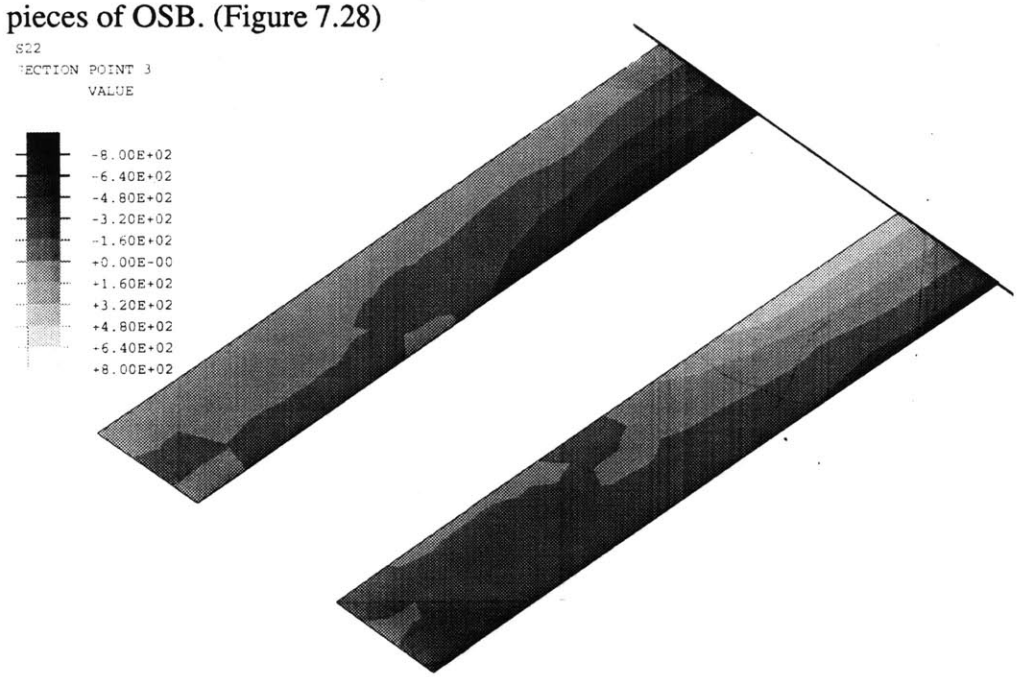

Figure 7.28
Axial Stress Contour Map of Half of the Bottom OSB Sheathing with Diagonal Bracing

This reduction is attributable to two factors. First, the torsion was reduced. Second, the diagonal bracing effectively shortens the span of the OSB. Because of the truss-like behavior of the reinforcing and the trusses, a much stiffer load path is created for the forces in the bottom of the beam. Consequently, the OSB experiences high stresses only in the unreinforced bays. (Figure 7.29)

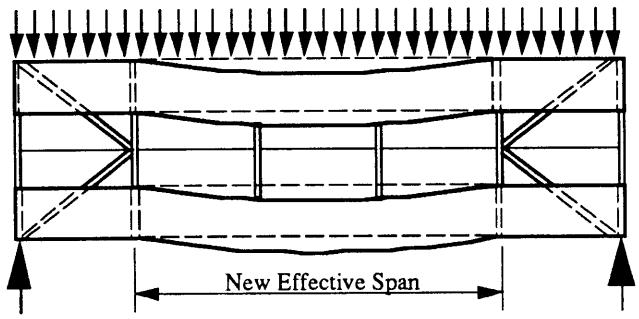

Figure 7.29
Diagonal Bracing Effectively Shortens the Span of the OSB

Because the torsional stress in the bottom stringers was still too high, diagonal bracing in the bottom was added to the next bay. (Figure 7.30)

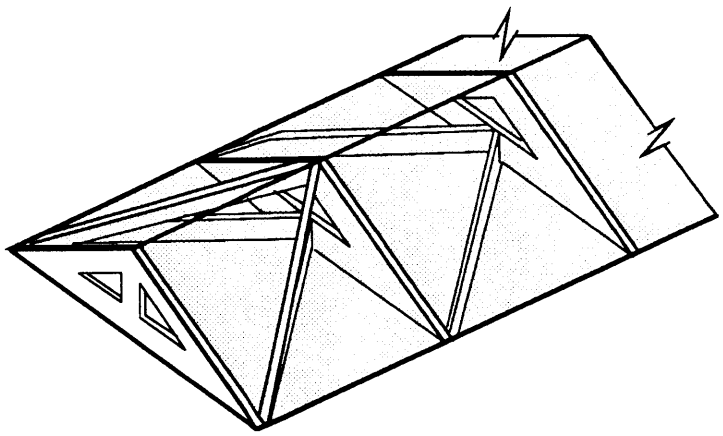

Figure 7.30
Reinforcement of the Two End Bays with Diagonal 2x4 Bracing

When this configuration was tested, the torsion was reduced by approximately 60% in the bottom stringers , and by roughly 25% in the top stringer . (Figure 7.31) With this, the torsional stress the stringers was well within the allowable limits. (NFPA, 1991)

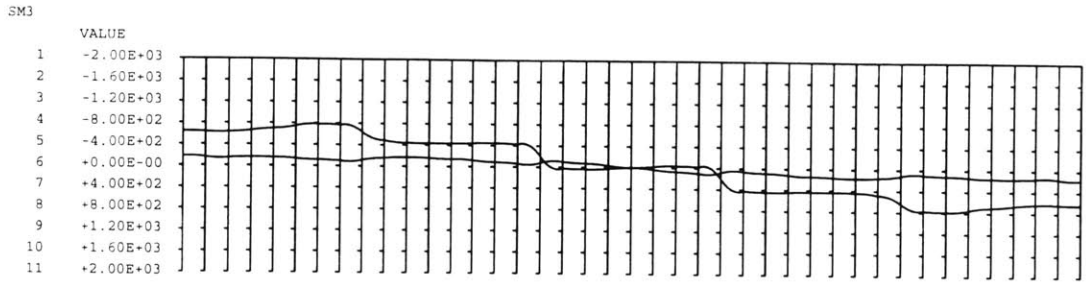

Figure 7.31
Torsion in the Stringers with Diagonal Bracing in the Last Two Bays

Several other benefits also came from the additional bracing. The bending stress in the bottom OSB was again reduced, both because of the reduced torsion and further "shortening" of the span. (Figure 7.32)

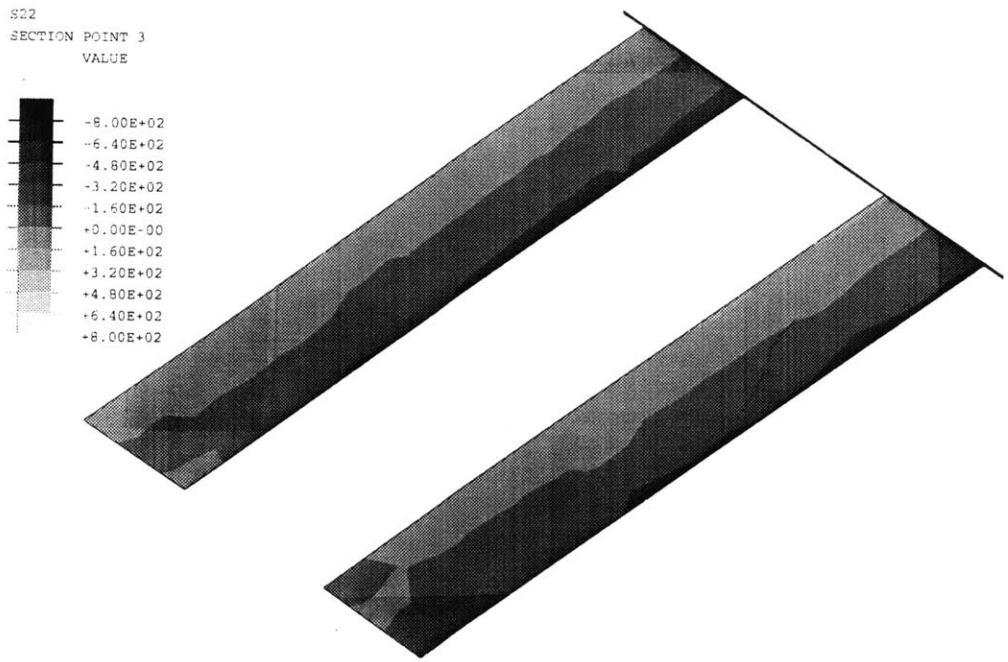

Figure 7.32
Axial Stress Contour Map of Half of the Bottom OSB with Diagonal Bracing in the Last Two Bays

Likewise, the axial force in the bottom stringers was greatly reduced. (Figure 7.33) The residual force at the ends of the stringers increased, as additional force was transferred to the outside corners through the bracing. (refer to Figure 6.39)

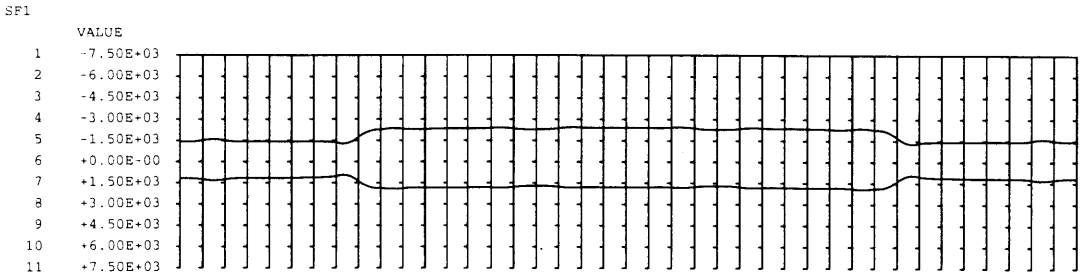

Figure 7.33
Axial Force in the Bottom Stringers with Diagonal Bracing in the Last Two Bays

The 3-dimensional truss effect created by the bracing, also substantially reduced the bending moments in the stringers. (Figure 7.34)

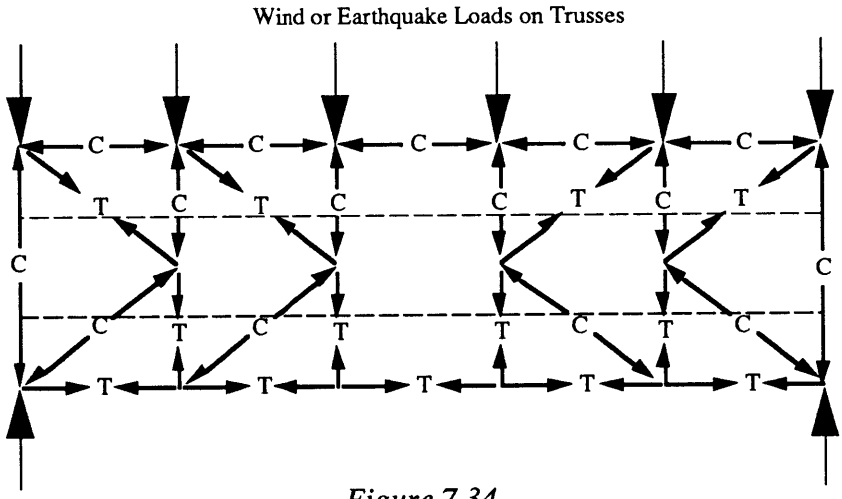

Figure 7.34
Truss-like Behavior of the Bottom of a Braced Ridge Beam

However, a ridge beam with all of the reinforcing that has been suggested will be much more difficult to manufacture. As discussed in Chapter 1, building the original ridge beam was the most difficult aspect of the roof system's manufacturing process. With the addition of twelve pieces of diagonal bracing,

each of which must be cut at an odd angle, this process would become even more difficult.

Furthermore, the additional diagonal bracing has done very little to reduce the bending moments in the top chords of the trusses. The maximum moment in the third truss is still 5400 in.-lbs., or 1750 psi. As discussed earlier, this will either require much closer spacing of the trusses or the use of high strength MSR, each of which would add more cost to the ridge beam.

Relocation of the Loads

At this point it was important to refer back to the reason that so much torsion was developing in the ridge beam. From the free body diagram of the ridge beam under lateral loads, it was apparent that the cause of the torsion was the OSB's resistance to in-plane bending. This was further accentuated by the the vertical loads resulting from high winds. (Figure 7.10)

However, in this diagram the location of the loads is very important. When the loads were moved down to the bottom of the ridge beam to isolate the bending moments in the trusses caused by torsion (Figure 7.23), an additional source of rotation was created: the horizontal load coupled with the beam's resistance at the instantaneous centroid, *Y*. Furthermore, the moment arm between the vertical loads increased. (Figure 7.35) When the FEM was tested for this loading, the torsion in each of the stringers increased roughly 2 1/2 times.

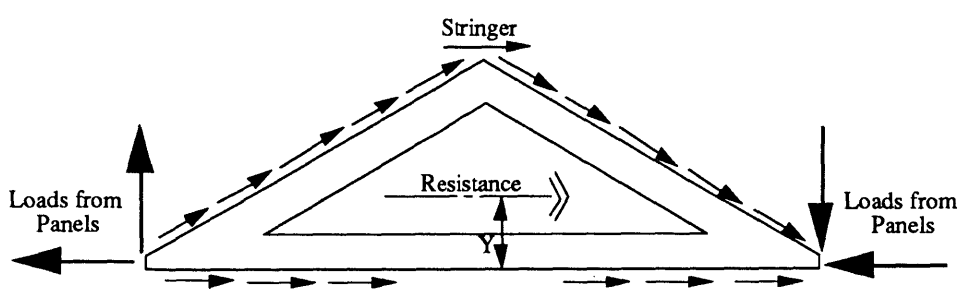

Figure 7.35
Free Body Diagram of the Ridge Beam with Loads Applied at the Corners

On the other hand, if the loads are moved to the top of the ridge beam, a rotational moment again develops between the horizontal load and the line of resistance. This time it is in the opposite direction, countering the rotation caused by the OSB. When the vertical loads are added, the rotation they had caused previously disappears completely. (Figure 7.36)

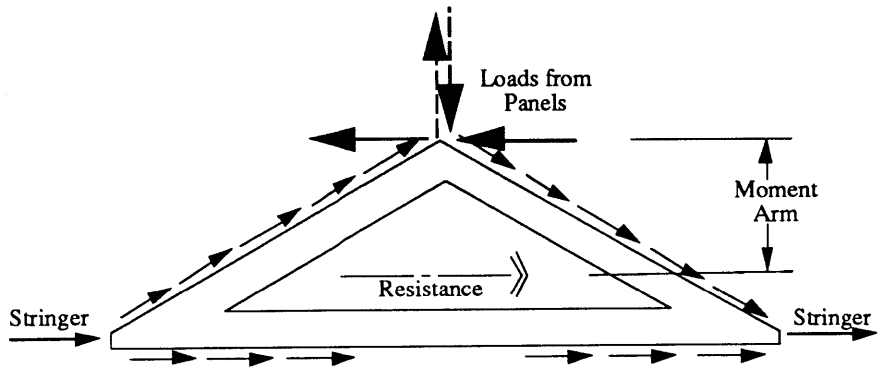

Figure 7.36
Free Body Diagram of the Ridge Beam with Loads Applied at the Top

When the FEM was loaded this way, the results showed that the ridge beam would rotate in th direction. (Figure 7.37)

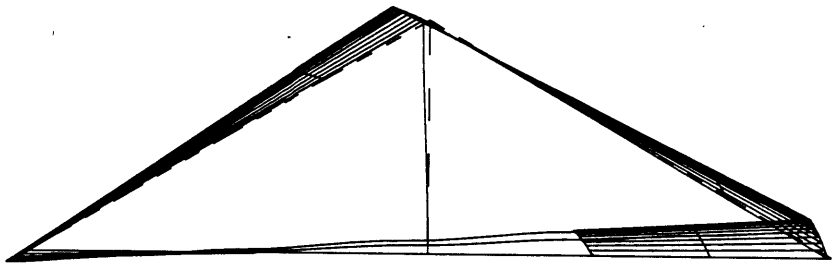

Figure 7.37
End View of the FEM Displaced by Wind Loads Applied at the Top of the Ridge Beam

Likewise, the torsion diagram for the stringers showed that the torsion had an opposite sign. Its magnitude had also dropped considerably, 300 in.-lbs. in the bottom stringers. (Figure 7.38)

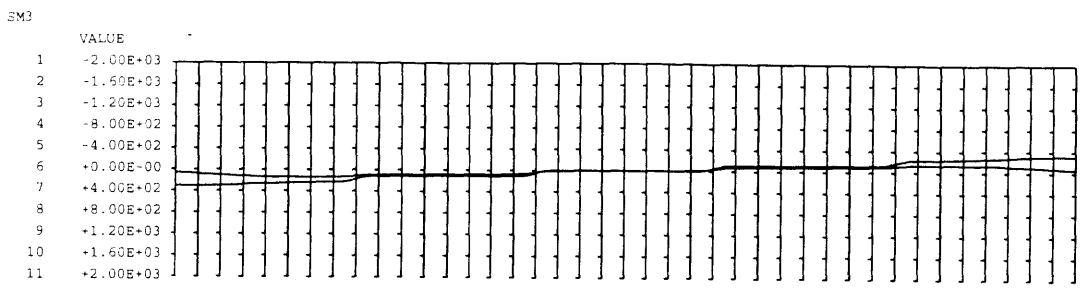

Figure 7.38
Torsion in the Stringers Caused by Wind Applied at the Top of the Ridge Beam

However, because of the attachment method, it is not possible to attach the panels at the very top of the beam. If the ledgers on the ridge beam are moved up as close to the top of the beam as possible, the point of attachment must be at least approximately 4 1/2" down from the top. (Figure 7.39)

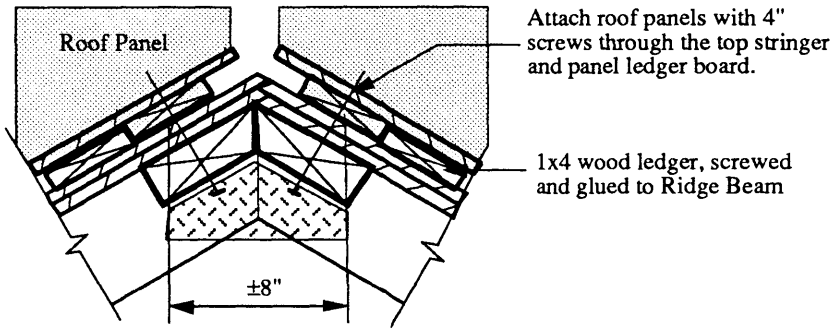

Figure 7.39
New Attachment Point for the Roof Panels

Although this attachment will not be as easy to accomplish in the field, it does provide a stronger connection. Large screws can be used to penetrate through the top stringers and into the panel's ledger. This will create a loading condition that is as close to the previous one as possible. In it, some rotation will will again be created by the vertical loads, but the moment arm will be very small. (Figure 7.40)

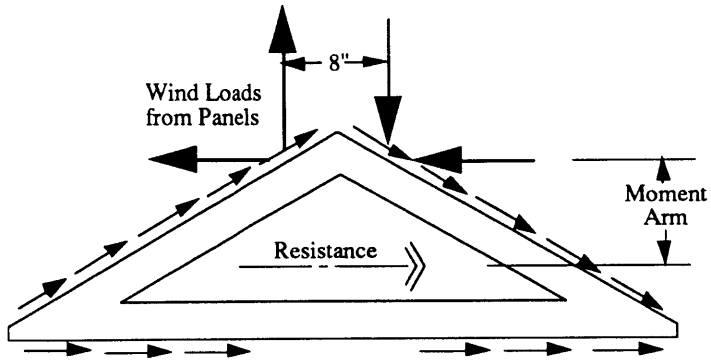

Figure 7.40
Free Body Diagram of the Ridge Beam with Realistic Loading

The FEM of the ridge beam was loaded in this way and tested. Although the beam twisted in the same direction as it did originally (Figure 7.15), the magnitude of the torsion in the stringers remained low across the beam. (Figure 7.41)

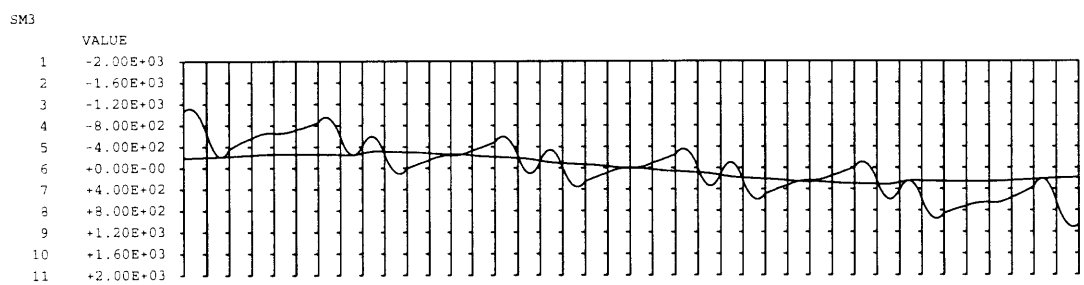

Figure 7.41
Torsion in the Stringers Caused by Wind Applied Near the Top of the Beam

Most noticeable in this graph are the ups and downs in the top stringer. Although the torsion generally follows a diagonal line, as would be expected, the discontinuities seem to be more than just slight numerical anomalies. To understand the reason behind this, an even more detailed look at the way the loads were applied was necessary. (Figure 7.42)

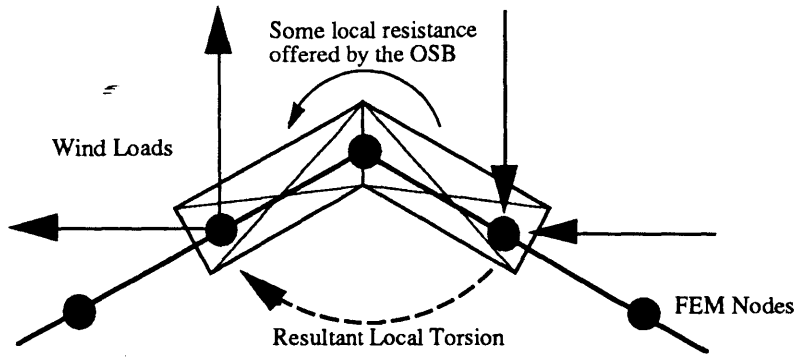

Figure 7.42
Local Torsion in the Top Stringer Casued by Wind Loads

Although the loads generally produce a counter-clockwise rotation in the beam, on a local level they produce a clockwise rotation in the top stinger. This local rotation is resisted in part by the nearby OSB and in part by the stringer itself.

As Figure 7.41 indicates, there is a large internal moment at the end the top stringer created by the reactions. Next, there is an immediate reduction because of the additional counter-rotation in the local OSB. More and more rotational force in the stringer is then needed to resist the overall torsion in the beam, until the next wind load is applied. At this point, there is again a drop in the internal torsion caused by the counter-rotation in the local OSB, and at the load, it increases to counter the overall rotation. In the next bay it again drops and gradually climbs back up. (Figure 7.43)

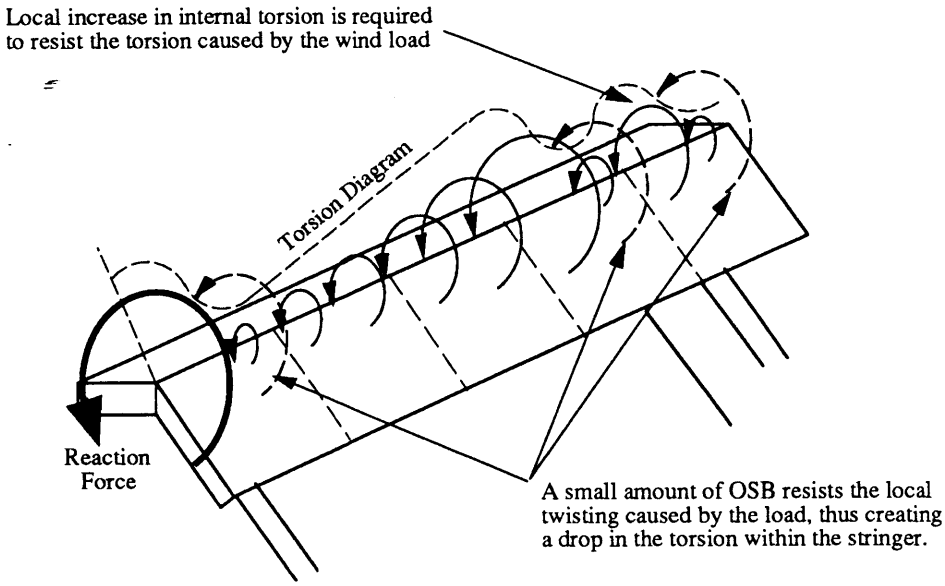

Figure 7.42
Internal Torsion in the Top Stringer

Moving the location of the loads to the top of the beam also had a positive effect on other aspects of the ridge beam's behavior. Because torsion-induced bending in bottom of the beam has been reduced, the axial force in the stringers showed a substantial reduction. (Figure 7.44)

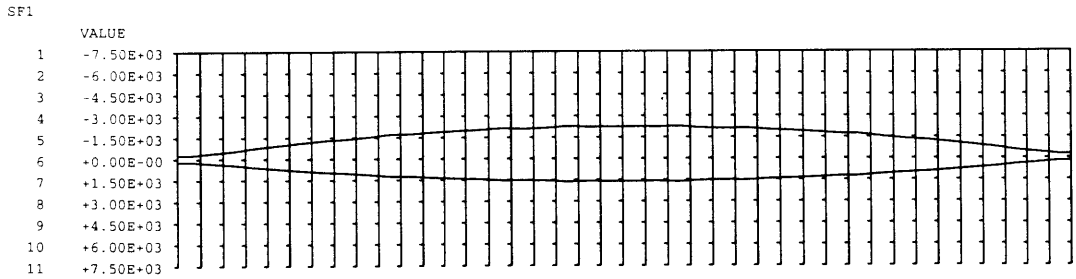

Figure 7.44
Axial Force in the Bottom Stringers Caused by Wind Loads Applied near the Top of the Ridge Beam

Likewise, the axial stress in the bottom OSB was reduced. (Figure 7.45)

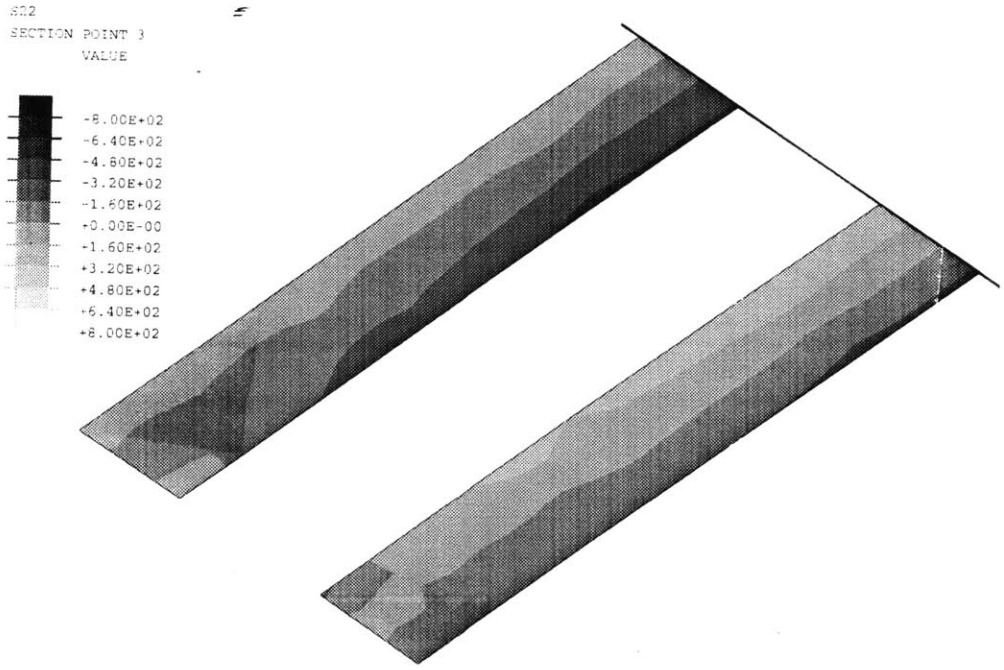

Figure 7.45
Axial Stress Contour Map of Half of the Bottom OSB with Wind Loads Applied near the Top of the Ridge Beam

Another important benefit was the reduced bending moments in the internal trusses. As mentioned earlier, the high bending moments in the top chords of the trusses were caused by the location of the load and the torsion in the ridge beam. By placing the loads near the top of the beam, both of these factors have been reduced. The highest bending moment in the trusses in the IBACoS ridge beam was now 2500 in.-lbs., roughly 820 psi. (Figure 7.47)

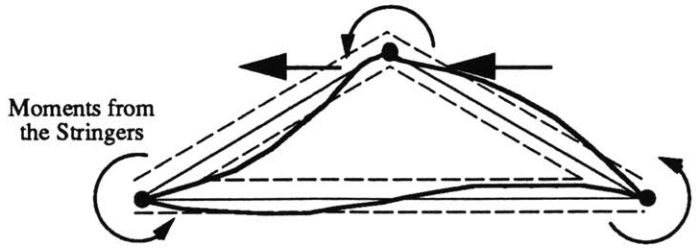

Figure 7.47
Deflection Diagram of the Center Trusses with Loads near the Top

Recommendations for Resisting Lateral Loads

Through this investigation, it has become apparent that the ridge beam is highly susceptible to torsion caused by lateral loads. Two ways of addressing this have been investigated. First, it was resisted by adding diagonal stiffeners. For the IBACoS ridge beam, a relatively short ridge beam, stiffeners were needed in all but one bay.

Second, the problem was addressed by *preventing* torsion. Simply by changing the location of the load, the torsion can be minimized and the problems that go with it alleviated. However, it has also become evident through this investigation that torsion is *extremely* sensitive to the location and the orientation of the loads. What may be ideal for wind loads may not be ideal for earthquake loads. Likewise, the slope of the roof will have an effect on the location of the loads, as the ridge beam's polar moment of inertia will change and the moment arm between the horizontal load and the beam's resistance will be altered. It is of critical importance that these issues be carefully considered in the design of the ridge beam. Further investigation into this is left to future research.

It was the original intent of this investigation to develop a generic design for the ridge beam. This implies the ability to withstand the worst snow loads, wind loads, and earthquakes. However, because of the wide range of variables, this has proven to be very difficult.

Although this investigation has focused on primarily on the IBACoS House ridge beam, it has resulted in a general understanding of any ridge beam's behavior, and guidelines have been developed for future designs. For example, the addition of the kingpost in the end trusses and locating the load closer to the top of the beam are sound ideas that can be incorporated easily into any design and the manufacturing process. However, as spans get longer and loading conditions vary, these modifications may not be enough. The diagonal struts in the end bays may prove to be very important for some applications. In short, the design of *each* ridge beam will require a careful re-examination of these issues to ensure that the it can perform adequately.

Chap. 8 *Conclusions and Evaluation*

Recommendations for an Improved Roof System

Throughout this investigation and the development of the panelized roof system, there have been many changes to the system design. The system consists of three basic components, the panels, the splines, and the ridge beam; and the design of each has been evaluated and modified. The original design, the starting point for this thesis, was discussed in Chapter 1. With the recommended changes, the system will be much different.

The first changes were to the design of the panels. As explained in Chapter 1, the design was altered to accommodate the manufacturing process. Joint reinforcement within the panel was eliminated, blocking between the ribs was replaced with a rigid block of foam and endcaps, and the eave condition was modified to simplify the panel. (Figure 8.1)

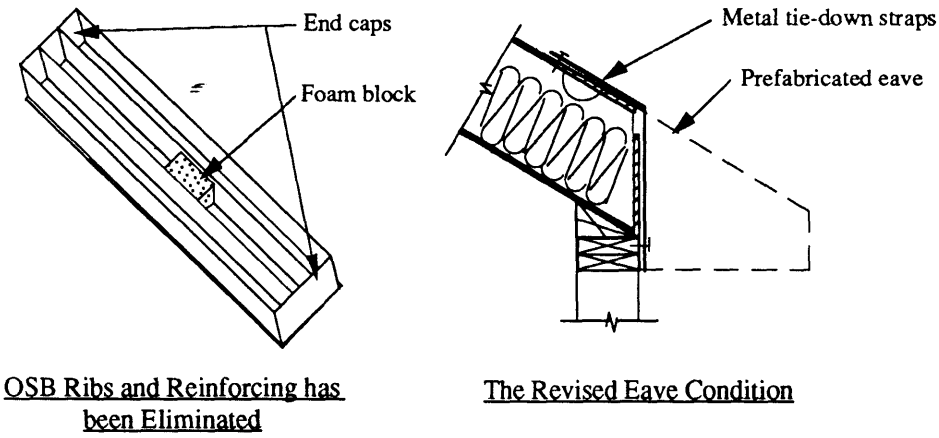

Figure 8.1
The Design of the Roof Panels

Furthermore, a method for accommodating roof openings was developed. As explained in Chapter 2, when part of the skin of a stressed skin panel is removed, the panel loses some of its structural integrity. By attaching wood 2x4's inside each face, adjacent to the roof opening, the strength of the panel can be restored. (Figure 8.2) In doing this, careful attention must be paid to the fastener spacing and to the development length at the ends of the 2x4's.

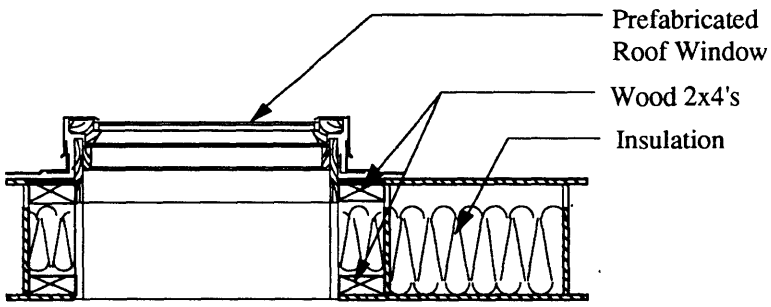

Figure 8.2
Section through a Panel with a Skylight

A recommendation regarding the panels that came from the experience of installing the roof system on the IBACoS Lab House was to reinforce the edges of the panels. As originally designed, the panels are quite susceptible to damage, especially from impacts to the exposed edges. Chapter 3 discussed this in

detail. To prevent this, the edges could be reinforced with wood 1x2's or protective channels that could be clipped over the edges. (Figure 8.3)

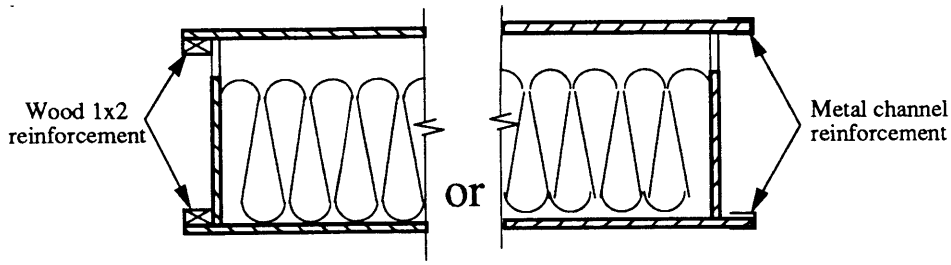

Figure 8.3
Edge Reinforcement in the Roof Panels

The other recommendation that cane from the experience at the IBACoS House was to improve the splines and the way they are installed. As originally designed, the splines were made of a layer of rigid foam insulation and a layer of compressible foam rubber, sandwiched between two small pieces of 7/16" OSB. (Figure 1.3) The splines were pushed into the cavity created between two roof panels when they were set in place. Fasteners were then screwed into the splines from above and below. This procedure should be changed.

The splines should be attached to one panel while it is still on the ground. Then as the panel is lifted into place, it can be placed next to the previous panel and pushed against it, thus engaging the spline with the other panel. To ensure that this process is quick and easy, the top and bottom of the spline should be beveled, so the corners do not catch. Because this process implies a right-to-left or left-to-right sequencing of the panels, the splines should be manufactured so that they can be used in either sequence. This could be accomplished by beveling both sides, or by simply providing the option when the system is ordered. Furthermore, the splines need to be more robust,. In the material selection for both the faces and the compressible foam, much more attention needs to be paid to this issue. The splines would be much more robust if the faces were made with wood 1x4's, and the "bite" the splines offer the screws would be increased. Although this would constitute a sacrifice in shear strength, the improved thermal barrier and the ease of installation may make it worthwhile.

Another recommendation for the design of the splines reflects the need to provide some tolerance within the system. As discussed in Chapter 3, it is unlikely that a house will ever be perfectly aligned and ready for the acceptance of a prefabricated system like the roof system. Therefore, the issue of tolerance is very important. While the implication of this has an effect on the house design, the system itself could also have some tolerance built into it. The splines could be manufactured with a layer of compressible foam on the sides as well as at the top, thereby filling in the gaps created by ill-fitting splines and allowing the width of the connection to vary. (Figure 8.4)

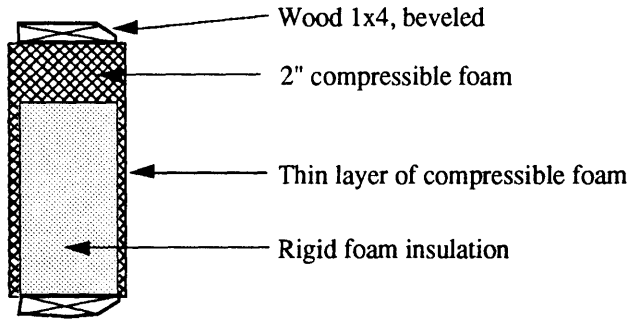

Figure 8.4
Proposal for Improved Splines

The ridge beam, has undergone intense investigation. Chapter 5 discussed the difficulties associated with the use of parallel strand lumber for the stringers. Many potential substitutes were examined, but the best option seems to be high strength MSR wood 2x's in a configuration that resembles the original parallel strand lumber. The bottom two stringers can be made of three separate pieces, glued together to form of a trapezoid. The top stringer can be made with two pieces joined together like an upside down "V". This configuration provides adequate stiffness and strength in the ridge beam, much better connections in the wood trusses, and easy manufacturing with no waste. (Figure 8.5)

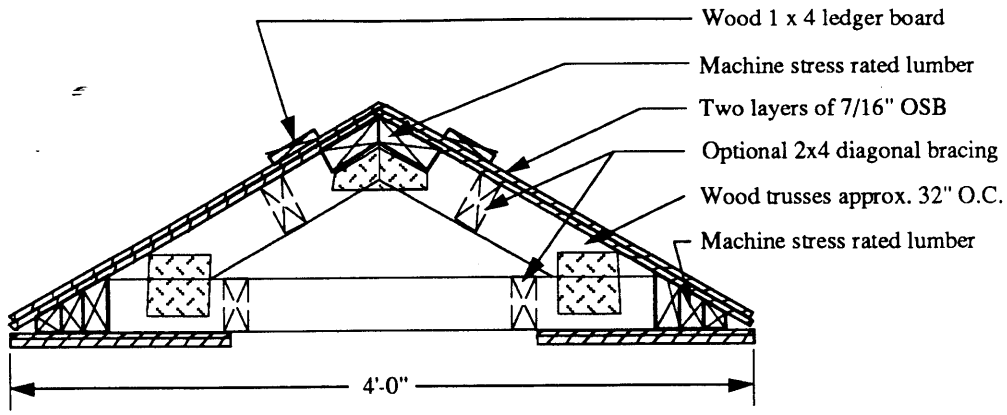

Figure 8.5
Section through the Proposed Design of the Ridge Beam

Further investigation of the ridge beam employed a finite element model (FEM). With the FEM, issues were examined that could not otherwise have been analyzed. As a result, several modifications to the design have been proposed. A kingpost should be added to the trusses directly over the supports, alleviating the high tension in the bottom chord. The ledgers should be located near the top of the ridge beam to help prevent the torsion induced by lateral loads. Diagonal bracing should be considered in both the top and the bottom of the ridge beam. Although this was not necessary for the IBACoS House because of its modest span, some applications with longer spans, heavier loads, and a greater concern for lateral loads may require it. This will reduce the stresses caused by shear and torsion. (Figure 8.6)

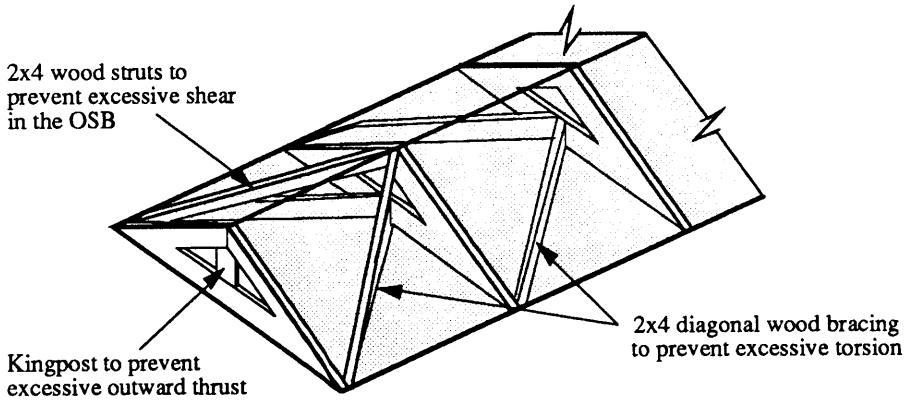

Figure 8.6
Additional Diagonal Bracing in the Ridge Beam

With the incorporation of these recommendations, the roof system performance will be enhanced. However, the FEM investigation has demonstrated that the stresses in the ridge beam are very sensitive to changes in span, loads, and roof pitch. Therefore, the specific design of the ridge beam should be re-examined for each application. While this constitutes a customization, this analysis could be performed with a computer program written expressly for this purpose, similar to those used to design prefabricated trusses. This special treatment is warranted, as the ridge beam is the crux of the system's structural performance.

Evaluation of the System

This panelized roof system offers many interesting possibilities. If the system is properly installed on a house that is designed to accept it, the system can provide a much better thermal enclosure at a lower cost than typical construction. Furthermore, the system has comparable structural abilities, but it uses much less material. In the delivery of a new house, there are three main parties in the value chain. (Figure 8.7) The roof system has been developed to provide an incentive for its use to each of these parties.

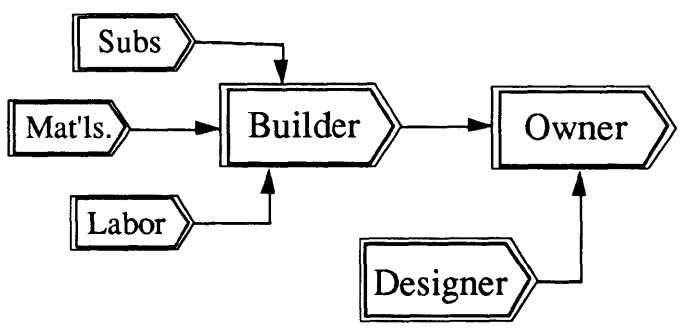

Figure 8.7
Industry Value Chain for Residential Construction

For the owner, the roof system creates the potential for additional floor space, as the attic space can be recouped if the system is utilized. The improved thermal envelope created by the system is another benefit to the owner, as life cycle costs will be reduced. The initial cost savings are also attractive.

The benefit to the designer comes from the fact that the system is essentially transparent. Namely, when the house is finished, it will not *look* like a panelized roof. In fact, almost any finish can be applied to both the exterior and the interior of the roof system. A great deal of effort has gone into providing this freedom, in order to avoid the idiosyncrasies that characterize other panelized systems.

An additional benefit to the designer is that the ridge beam provides *all* of the horizontal support for the system. Because of this, no tie is needed across the house, and no trusses are required. Totally unobstructed space is provided. (Figure 8.8) This opens up a wide range of possibilities for this space, including the creation of additional floor space.

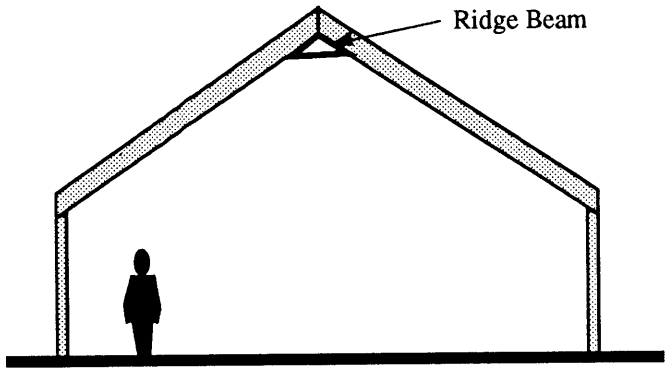

Figure 8.8
Uninterrupted Interior Space Created by the Use of a Ridge Beam

For the builder, the benefit comes from the system's low cost, its ease of installation, and the improved "close-in" time. If the design of the house includes provisions for the peculiarities of the roof system and the builder has scheduled the installation effectively, the roof system can cover large roof areas in less than a day.

For the builder, there are also many concerns associated with the system that are not associated with typical construction methods. These must be carefully planned for during the design and construction. Consequently builders must be

well educated as to the system's requirements. Training and technical support may be especially important in the commercial development of the system.

For designers, although the strengths of the system are appealing, it is limited in its application. The system was designed to add value, by enclosing habitable space within the roof envelope. This implies that it is best suited for relatively steep roof slopes. Because of the system's reliance on the ridge beam for support, roofs with discontinuous ridge lines are ill-suited for the system. To fully benefit from the advantages the roof system offers, the house must be designed to incorporate it.

Depending on the importance of the issues discussed above, the market niche for the system may be fairly small. Site selection, roof pitch and construction sequencing all limit the system's potential market. However, because of the benefits it offers, improved thermal enclosure and habitable attic space, some market segments may be quite attracted to its use. The critical issue is whether the segment will be large enough. Capital costs associated with start up and continuing manufacture of the roof system will be high. The viability of the system depends on careful consideration of these costs and the potential market.

The Role of Design

The ability of the system to provide affordable housing, energy efficiency, or the capacity to withstand earthquakes and hurricanes depends on the designer, as well as the system. If the designer understands the basic principles behind the system and how and when to employ them, the roof system can help strengthen a design and enhance performance. The roof system contains within it several important ideas that a designer can take advantage of, even if he or she chooses not to use it. These ideas are not new, but the combination of them in the roof system represents an overall approach that is important to the design. First, creating a stressed skin panel out of elements that are normal used separately (rafters and sheathing) represents a logical efficiency that comes from fully utilizing each material. Second, horizontal thrust can be eliminated at the bottom

of a roof by introducing a stiff ridge beam. This may be quite compelling if an open, uninterrupted space is required. Third, employing a stiff lateral load carrying element along the ridge reduces or eliminates the need for the roof to act as a diaphragm. This could be important to a designer if there is a concern about the connections required for diaphragm action. All of these concepts are embodied in the roof system, but can be employed independently. The designer must solve the problems associated with constructing and occupying a building by utilizing the full range of components and ideas that he has at his disposal. This system offers ideas, as well as a set of building components, and it should be thought of as such.

Appendix A

Panels vs. Rafters Comparison

Allowable Values:

	F(b)	F(c)	F(t)	F(v)	E	G
OSB	1,800	502	502	115	600,000	110,000
Rafters	600	850	325	90	1,400,000	NA

* F(b), E, and G for OSB are for 7/16" Structurewood® (Weyerhaeuser, 1988)
F(c), F(t), and F(v) for OSB are tested values for the panels
All Values for Rafters are for Southern Pine 2x10s, No. 3 (NDS,1991)

Analysis of Roof Panels

	A	y	Ay	I(x)	Add
Top	20.95	9.91	207.49	0.33	539.72
Bottom	20.95	0.22	4.58	0.33	445.38
Ribs	12.69	4.06	51.54	115.42	7.47
Totals	*54.58*		*263.61*	*116.09*	*992.57*

Analysis of Rafters 16" O.C.

	A	y(i)	Ay	I(x)	Add
Rafters	41.63	4.63	192.52	296.79	132.31
Plywood	24.00	9.50	228.00	0.50	229.47
Totals	*65.63*		*420.52*	*297.29*	*361.78*

Structural Attributes

	Y	I(x)	EI(x)	Q at N.A.
OSB Roof Panels	4.83	1109	6.65E+08	123.21
Rafters (16" OC)	6.41	659.08	9.23E+08	22.23

Allowable Live Loads for Roof Panels (psf)

Slope: 10 /12 Snow Load Reduction: 9.90

Criteria:	Shear	Bending	Deflection		Net
Width (ft)			Live Load	Total Def.	
16	172	425	226	321	**172**
18	151	325	166	231	**151**
20	134	256	126	171	**126**
22	121	207	98	129	**98**
24	111	170	78	100	**78**
26	102	143	64	78	**64**
28	94	121	53	62	**53**
30	88	104	45	50	**45**
32	82	90	39	41	**39**
34	77	79	34	33	**33**
36	73	70	30	28	**28**
38	69	62	27	23	**23**

Allowable Live Loads for Roof Panels (psf)

Slope: 10 /12 Snow Load Reduction: 9.90

Criteria:	Shear	Bending	Deflection		Net
Width (ft)			Live Load	Total Def.	
16	1,120	207	520	762	**207**
18	980	158	352	510	**158**
20	872	124	250	357	**124**
22	785	100	185	259	**100**
24	714	82	141	194	**82**
26	655	68	111	149	**68**
28	605	58	90	116	**58**
30	562	49	74	93	**49**
32	524	43	62	75	**43**
34	492	37	53	61	**37**
36	463	32	46	50	**32**
38	438	29	40	42	**29**

* The above calculations are based on 10 psf dead loads, 40 psf snow loads, a snow load reduction factor (UBC, 1988), and a load duration factor of 1.75 for the Roof Panels and 1.5 for the Rafters. (NDS,1991)

Appendix B

Analysis of a Typical Panel

Allowable Values:

	F(b)	F(c)	F(t)	F(v)	E	G
OSB	1,800	502	502	115	600,000	110,000
Stringers	NA	NA	NA	NA	NA	NA

* F(b), E, and G for OSB are for 7/16" Structurewood® (Weyerhaeuser, 1988)
F(c), F(t), and F(v) for OSB are tested values for the panels

Analysis of the Roof Panels

	A	y	Ay	I(x)	Add
Top	20.95	9.91	207.49	0.33	539.72
Bottom	20.95	0.22	4.58	0.33	445.38
Ribs	12.69	4.06	51.54	115.42	7.47
Totals	*54.58*		*263.61*	*116.09*	*992.57*

Structural Attributes

	Y	I(x)	EI(x)	Q at N.A.
OSB Roof Panels	4.83	1109	6.65E+08	123.21

Assumed Loads

Live Load:	40	Dead Load:	10	Duration Factor:	1.75

Allowable Live Loads for Roof Panels (psf)

Slope: 7 /12 Snow Load Reduction: 5.13

Criteria:	Shear	Bending	Deflection		Net
Width (ft)			Live Load	Total Def.	
16	149	422	229	330	**149**
18	130	322	170	240	**130**
20	116	253	129	179	**116**
22	104	204	100	136	**100**
24	95	167	79	105	**79**
26	87	139	64	82	**64**
28	80	118	53	65	**53**
30	74	101	44	52	**44**
32	69	87	37	42	**37**
34	65	76	32	34	**32**
36	61	66	28	27	**27**
38	58	58	24	22	**22**
40	55	52	22	18	**18**

Allowable Live Loads for Roof Panels (psf)

Slope: 8 /12 Snow Load Reduction: 6.85

Criteria:	Shear	Bending	Deflection		Net
Width (ft)			Live Load	Total Def.	
16	156	423	229	328	**156**
18	137	323	169	238	**137**
20	122	254	128	177	**122**
22	110	205	100	134	**100**
24	100	168	79	103	**79**
26	92	141	64	81	**64**
28	85	119	53	64	**53**
30	79	102	44	51	**44**
32	73	88	38	41	**38**
34	69	77	33	34	**33**
36	65	67	29	28	**28**
38	61	60	25	23	**23**
40	58	53	23	19	**19**

* The above calculations are based on (UBC,1988)

Allowable Live Loads for Roof Panels (psf)

Slope: 9 /12 Snow Load Reduction: 8.43

Criteria:	Shear	Bending	Deflection		Net
Width (ft)			Live Load	Total Def.	
16	164	425	228	325	**164**
18	144	324	168	235	**144**
20	128	255	127	174	**127**
22	115	206	99	132	**99**
24	105	169	79	102	**79**
26	97	142	64	80	**64**
28	89	120	53	63	**53**
30	83	103	45	51	**45**
32	78	89	39	41	**39**
34	73	78	34	34	**34**
36	69	69	30	28	**28**
38	65	61	26	23	**23**
40	62	54	24	19	**19**

Allowable Live Loads for Roof Panels (psf)

Slope: 10 /12 Snow Load Reduction: 9.90

Criteria:	Shear	Bending	Deflection		Net
Width (ft)			Live Load	Total Def.	
16	172	425	226	321	**172**
18	151	325	166	231	**151**
20	134	256	126	171	**126**
22	121	207	98	129	**98**
24	111	170	78	100	**78**
26	102	143	64	78	**64**
28	94	121	53	62	**53**
30	88	104	45	50	**45**
32	82	90	39	41	**39**
34	77	79	34	33	**33**
36	73	70	30	28	**28**
38	69	62	27	23	**23**

* The above calculations are based on (UBC,1988)

Allowable Live Loads for Roof Panels (psf)

Slope: 11 /12 Snow Load Reduction: 11.26

Criteria:	Shear	Bending	Deflection		Net
Width (ft)			Live Load	Total Def.	
16	180	426	224	317	**180**
18	158	326	164	227	**158**
20	141	257	125	168	**125**
22	127	208	97	127	**97**
24	116	171	78	98	**78**
26	107	144	64	76	**64**
28	99	122	53	61	**53**
30	92	105	45	49	**45**
32	86	91	39	40	**39**
34	81	80	35	33	**33**
36	77	70	31	27	**27**

Allowable Live Loads for Roof Panels (psf)

Slope: 12 /12 Snow Load Reduction: 12.50

Criteria:	Shear	Bending	Deflection		Net
Width (ft)			Live Load	Total Def.	
16	188	427	221	312	**188**
18	165	326	162	223	**162**
20	148	258	123	164	**123**
22	133	208	96	124	**96**
24	122	172	77	95	**77**
26	112	144	63	75	**63**
28	104	123	53	59	**53**
30	97	106	46	48	**46**
32	91	92	40	39	**39**
34	85	80	35	32	**32**

* The above calculations are based on (UBC,1988)

Appendix C

Analysis of a Panel with a Roof Window

Opening Width: 22 Number of Ribs Remaining: 3

Allowable Values:

	F(b)	F(c)	F(t)	F(v)	E	G
OSB	1,800	430	430	115	600,000	110,000
Stringers	775	950	450	90	1,200,000	NA

* F(b), E, and G for OSB are for 7/16" Structurewood® (Weyerhaeuser, 1988)
F(c), F(t), and F(v) for OSB are tested values for the panels
Values for Stringers are for So. Pine 2x4's, Stud Quality (NFPA,1991)

Analysis of the Roof Panels

	A	y	EA	EAy	I(x)	Add	EI(x)
Top	11.32	9.91	6.79E+06	6.73E+07	0.18	279.85	1.68E+08
Bottom	11.32	0.22	6.79E+06	1.49E+06	0.18	251.71	1.51E+08
Ribs	9.52	4.06	5.71E+06	2.32E+07	86.57	7.23	5.63E+07
T. Stringer	10.50	8.94	1.26E+07	1.13E+08	1.97	168.28	2.04E+08
B. Stringer	10.5	1.19	1.26E+07	1.50E+07	1.97	147.395	1.79E+08
Totals	*32.16*		*4.45E+07*	*2.20E+08*	*90.86*	*854.47*	*7.59E+08*

Structural Attributes

	Y	I(OSB)	I(2x4)	EI(x)	EQ at N.A.
OSB Roof Panels	4.93	1265	632	7.59E+08	1.08E+08

Assumed Loads

Live Load:	40	Dead Ld:	10	Duration Factor:	1.75

Allowable Live Loads for Roof Panels (psf)

Slope: 7 /12 Snow Load Reduction: 5.13

Criteria:	Shear	Bending			Deflection		Net
Width (ft)		OSB	T in 2x4	C in 2x4	Live Load	Total Ld.	
16	87	359	265	941	220	316	**87**
18	76	273	201	719	167	236	**76**
20	68	214	158	566	129	180	**68**
22	61	172	127	458	102	139	**61**
24	55	141	103	377	82	109	**55**
26	51	118	86	316	67	86	**51**
28	47	99	72	268	55	69	**47**
30	43	85	61	230	47	56	**43**
32	40	73	53	200	40	45	**40**
34	38	63	46	175	34	37	**34**
36	35	55	40	154	30	30	**30**
38	33	49	35	137	26	25	**25**
40	32	43	30	122	23	21	**21**

Allowable Live Loads for Roof Panels (psf)

Slope: 8 /12 Snow Load Reduction: 6.85

Criteria:	Shear	Bending			Deflection		Net
Width (ft)		OSB	T in 2x4	C in 2x4	Live Load	Total Def.	
16	92	360	266	942	221	316	**92**
18	81	274	203	720	167	235	**81**
20	72	216	159	568	129	179	**72**
22	65	174	128	459	102	138	**65**
24	59	143	105	378	82	108	**59**
26	54	119	87	317	67	86	**54**
28	50	101	74	269	56	69	**50**
30	46	86	63	232	47	55	**46**
32	43	74	54	201	40	45	**40**
34	41	65	47	176	35	37	**35**
36	38	57	41	155	31	31	**31**
38	36	50	36	138	27	25	**25**

* The above calculations are based on (UBC,1988)

Allowable Live Loads for Roof Panels (psf)

Slope: 9 /12 Snow Load Reduction: 8.43

Criteria:	Shear	Bending			Deflection		Net
Width (ft)		OSB	T in 2x4	C in 2x4	Live Load	Total Def.	
16	97	361	267	943	222	316	**97**
18	85	275	204	721	167	234	**85**
20	76	217	160	569	129	177	**76**
22	68	175	129	460	102	137	**68**
24	62	144	106	379	82	107	**62**
26	57	120	88	318	68	85	**57**
28	53	102	75	271	56	68	**53**
30	50	87	64	233	48	55	**48**
32	46	75	55	202	41	45	**41**
34	44	66	48	177	36	37	**36**
36	41	58	42	157	32	31	**31**
38	39	51	37	139	28	26	**26**
40	37	45	33	124	25	21	**21**

Allowable Live Loads for Roof Panels (psf)

Slope: 10 /12 Snow Load Reduction: 9.90

Criteria:	Shear	Bending			Deflection		Net
Width (ft)		OSB	T in 2x4	C in 2x4	Live Load	Total Def.	
16	102	362	268	944	222	315	**102**
18	90	276	205	722	167	232	**90**
20	80	218	161	570	129	175	**80**
22	72	176	130	461	102	135	**72**
24	66	145	107	380	82	105	**66**
26	61	121	89	319	68	83	**61**
28	56	103	76	271	57	67	**56**
30	53	88	65	234	48	54	**48**
32	49	76	56	203	42	44	**42**
34	47	67	49	178	36	37	**36**
36	44	59	43	157	32	31	**31**
38	42	52	38	140	29	26	**26**

* The above calculations are based on (UBC,1988)

Allowable Live Loads for Roof Panels (psf)

Slope: 11 /12 Snow Load Reduction: 11.26

Criteria:	Shear	Bending			Deflection		Net
Width (ft)		OSB	T in 2x4	C in 2x4	Live Load	Total Def.	
16	107	363	269	945	221	313	**107**
18	94	277	206	723	166	230	**94**
20	84	219	162	571	128	173	**84**
22	76	177	131	462	101	133	**76**
24	70	146	108	381	82	104	**70**
26	64	122	90	320	67	82	**64**
28	60	104	76	272	57	66	**57**
30	56	89	66	234	48	53	**48**
32	52	77	57	204	42	44	**42**
34	49	68	50	179	37	36	**36**
36	47	60	44	158	33	30	**30**

Allowable Live Loads for Roof Panels (psf)

Slope: 12 /12 Snow Load Reduction: 12.50

Criteria:	Shear	Bending			Deflection		Net
Width (ft)		OSB	T in 2x4	C in 2x4	Live Load	Total Def.	
16	71	355	261	937	221	310	**71**
18	61	270	198	715	165	227	**61**
20	54	211	154	563	127	170	**54**
22	48	169	123	454	101	130	**48**
24	43	138	100	374	81	102	**43**
26	39	114	82	312	67	80	**39**
28	36	96	69	265	57	65	**36**
30	33	81	58	227	49	52	**33**
32	30	70	49	196	42	43	**30**
34	28	60	42	171	37	36	**28**

* The above calculations are based on (UBC,1988)

Appendix D

Development Length and Screw Spacing for Openings

7:12 Slope, 30psf Snow Load

Panel Span (ft): 10 Slope: 7 :12 Snow Load: 30 psf

Distance (ft):	1	2	3	4	5	6	7	8	9	10	11
Screw Spacing	6.73	8.97	13.46	26.92	-	-	-	-	-	-	-
Dev. Length	0.21	0.84	1.89	3.35	5.24	-	-	-	-	-	-

Panel Span (ft): 14

Distance (ft):	1	2	3	4	5	6	7	8	9	10	11
Screw Spacing	4.49	5.38	6.73	8.97	13.46	26.92	-	-	-	-	-
Dev. Length	0.21	0.84	1.89	3.35	5.24	7.54	10.26	-	-	-	-

Panel Span (ft): 18

Distance (ft):	1	2	3	4	5	6	7	8	9	10	11
Screw Spacing	3.36	3.85	4.49	5.38	6.73	8.97	13.46	26.92	-	-	-
Dev. Length	0.21	0.84	1.89	3.35	5.24	7.54	10.26	13.40	16.97	-	-

Panel Span (ft): 22

Distance (ft):	1	2	3	4	5	6	7	8	9	10	11
Screw Spacing	2.69	2.99	3.36	3.85	4.49	5.38	6.73	8.97	13.46	26.92	-
Dev. Length	0.21	0.84	1.89	3.35	5.24	7.54	10.26	13.40	16.97	20.94	25.34

Required Development Length & Screw Spacing

8:12 Slope, 30psf Snow Load

Panel Span (ft): 10 Slope: 8 :12 Snow Load: 30 psf

Distance (ft):	1	2	3	4	5	6	7	8	9	10	11
Screw Spacing	6.73	8.97	13.46	26.92	-	-	-	-	-	-	-
Dev. Length	0.21	0.84	1.89	3.35	5.24	-	-	-	-	-	-

Panel Span (ft): 12

Distance (ft):	1	2	3	4	5	6	7	8	9	10	11
Screw Spacing	5.38	6.73	8.97	13.46	26.92	-	-	-	-	-	-
Dev. Length	0.21	0.84	1.89	3.35	5.24	7.54	-	-	-	-	-

Panel Span (ft): 14

Distance (ft):	1	2	3	4	5	6	7	8	9	10	11
Screw Spacing	4.49	5.38	6.73	8.97	13.46	26.92	-	-	-	-	-
Dev. Length	0.21	0.84	1.89	3.35	5.24	7.54	10.26	-	-	-	-

Panel Span (ft): 16

Distance (ft):	1	2	3	4	5	6	7	8	9	10	11
Screw Spacing	3.85	4.49	5.38	6.73	8.97	13.46	26.92	-	-	-	-
Dev. Length	0.21	0.84	1.89	3.35	5.24	7.54	10.26	13.40	-	-	-

Panel Span (ft): 18

Distance (ft):	1	2	3	4	5	6	7	8	9	10	11
Screw Spacing	3.36	3.85	4.49	5.38	6.73	8.97	13.46	26.92	-	-	-
Dev. Length	0.21	0.84	1.89	3.35	5.24	7.54	10.26	13.40	16.97	-	-

Panel Span (ft): 20

Distance (ft):	1	2	3	4	5	6	7	8	9	10	11
Screw Spacing	2.99	3.36	3.85	4.49	5.38	6.73	8.97	13.46	26.92	-	-
Dev. Length	0.21	0.84	1.89	3.35	5.24	7.54	10.26	13.40	16.97	20.94	-

Panel Span (ft): 22

Distance (ft):	1	2	3	4	5	6	7	8	9	10	11
Screw Spacing	2.69	2.99	3.36	3.85	4.49	5.38	6.73	8.97	13.46	26.92	-
Dev. Length	0.21	0.84	1.89	3.35	5.24	7.54	10.26	13.40	16.97	20.94	25.34

Note: Screw strength (single shear) is assumed to be 94 pounds, as for 12d wood screws with 3/4" penetration into Eastern Pine. (NDS, 1991)

Required Development Length & Screw Spacing

10:12 Slope, 30psf Snow Load

Panel Span (ft): 10 Slope: 10 :12 Snow Load: 30 psf

Distance (ft):	1	2	3	4	5	6	7	8	9	10	11
Screw Spacing	7.71	10.28	15.42	30.84	-	-	-	-	-	-	-
Dev. Length	0.18	0.73	1.65	2.92	4.57	-	-	-	-	-	-

Panel Span (ft): 12

Distance (ft):	1	2	3	4	5	6	7	8	9	10	11
Screw Spacing	6.17	7.71	10.28	15.42	30.84	-	-	-	-	-	-
Dev. Length	0.18	0.73	1.65	2.92	4.57	6.58	-	-	-	-	-

Panel Span (ft): 14

Distance (ft):	1	2	3	4	5	6	7	8	9	10	11
Screw Spacing	5.14	6.17	7.71	10.28	15.42	30.84	-	-	-	-	-
Dev. Length	0.18	0.73	1.65	2.92	4.57	6.58	8.96	-	-	-	-

Panel Span (ft): 16

Distance (ft):	1	2	3	4	5	6	7	8	9	10	11
Screw Spacing	4.41	5.14	6.17	7.71	10.28	15.42	30.84	-	-	-	-
Dev. Length	0.18	0.73	1.65	2.92	4.57	6.58	8.96	11.70	-	-	-

Panel Span (ft): 18

Distance (ft):	1	2	3	4	5	6	7	8	9	10	11
Screw Spacing	3.86	4.41	5.14	6.17	7.71	10.28	15.42	30.84	-	-	-
Dev. Length	0.18	0.73	1.65	2.92	4.57	6.58	8.96	11.70	14.81	-	-

Panel Span (ft): 20

Distance (ft):	1	2	3	4	5	6	7	8	9	10	11
Screw Spacing	3.43	3.86	4.41	5.14	6.17	7.71	10.28	15.42	30.84	-	-
Dev. Length	0.18	0.73	1.65	2.92	4.57	6.58	8.96	11.70	14.81	18.28	-

Panel Span (ft): 22

Distance (ft):	1	2	3	4	5	6	7	8	9	10	11
Screw Spacing	3.08	3.43	3.86	4.41	5.14	6.17	7.71	10.28	15.42	30.84	-
Dev. Length	0.18	0.73	1.65	2.92	4.57	6.58	8.96	11.70	14.81	18.28	22.12

Note: Screw strength (single shear) is assumed to be 94 pounds, as for 12d wood screws with 3/4" penetration into Eastern Pine. (NDS, 1991)

Required Development Length & Screw Spacing

12:12 Slope, 30psf Snow Load

Panel Span (ft): 10 Slope: 12 :12 Snow Load: 30 psf

Distance (ft):	1	2	3	4	5	6	7	8	9	10	11
Screw Spacing	8.87	11.83	17.74	35.48	-	-	-	-	-	-	-
Dev. Length	0.16	0.64	1.43	2.54	3.97	-	-	-	-	-	-

Panel Span (ft): 12

Distance (ft):	1	2	3	4	5	6	7	8	9	10	11
Screw Spacing	7.10	8.87	11.83	17.74	35.48	-	-	-	-	-	-
Dev. Length	0.16	0.64	1.43	2.54	3.97	5.72	-	-	-	-	-

Panel Span (ft): 14

Distance (ft):	1	2	3	4	5	6	7	8	9	10	11
Screw Spacing	5.91	7.10	8.87	11.83	17.74	35.48	-	-	-	-	-
Dev. Length	0.16	0.64	1.43	2.54	3.97	5.72	7.79	-	-	-	-

Panel Span (ft): 16

Distance (ft):	1	2	3	4	5	6	7	8	9	10	11
Screw Spacing	5.07	5.91	7.10	8.87	11.83	17.74	35.48	-	-	-	-
Dev. Length	0.16	0.64	1.43	2.54	3.97	5.72	7.79	10.17	-	-	-

Panel Span (ft): 18

Distance (ft):	1	2	3	4	5	6	7	8	9	10	11
Screw Spacing	4.43	5.07	5.91	7.10	8.87	11.83	17.74	35.48	-	-	-
Dev. Length	0.16	0.64	1.43	2.54	3.97	5.72	7.79	10.17	12.87	-	-

Panel Span (ft): 20

Distance (ft):	1	2	3	4	5	6	7	8	9	10	11
Screw Spacing	3.94	4.43	5.07	5.91	7.10	8.87	11.83	17.74	35.48	-	-
Dev. Length	0.16	0.64	1.43	2.54	3.97	5.72	7.79	10.17	12.87	15.89	-

Panel Span (ft): 22

Distance (ft):	1	2	3	4	5	6	7	8	9	10	11
Screw Spacing	3.55	3.94	4.43	5.07	5.91	7.10	8.87	11.83	17.74	35.48	-
Dev. Length	0.16	0.64	1.43	2.54	3.97	5.72	7.79	10.17	12.87	15.89	19.23

Note: Screw strength (single shear) is assumed to be 94 pounds, as for 12d wood screws with 3/4" penetration into Eastern Pine. (NDS, 1991)

Appendix E

Multiple Openings in a Panel (Method of Virtual Work)

Input:

Panel Length (ft):	18	Slope:	0.58	Dead Load (psf):	10
AG (panel):	1.40E+06	EI (panel):	6.65E+08	Time Factor:	1.75
AG (opening):	1.05E+06	EI (open'g):	7.59E+08	Snow Ld Reduction:	2.56

Configurations:

No. of Openings:	0	1	1	2	2	3	3	4
Location:	*None*	*Bottom*	*Midspan*	*Lower Half*	*Midspan*	*Midspan*	*Spaced*	*Spaced*
Distance from Wall to:								
Bottom		0	7	0	5	3	1	0
Top		4		4	9	7	5	4
Bottom				5		7	7	5
Top				9				9
Distance from Ridge to:					Centerline			
Bottom								9
Top						7	7	5
Bottom					9	7	5	4
Top			7		5	3	1	0

Maximum Allowable Live Load Limited By:

L.L. Deflection	46.97	47.20	48.50	50.07	60.05	52.24	49.86	53.64
Total Deflection	57.59	57.94	59.88	62.24	77.22	65.50	61.93	67.59

Deflection Due to:

Assumed Live Load: 30

Shear	0.010	0.011	0.010	0.012	0.014	0.012	0.012	0.013
Bending	0.275	0.272	0.266	0.255	0.206	0.244	0.256	0.235
Net Deflection:	0.285	0.284	0.276	0.267	0.220	0.255	0.268	0.248

Development Length (in.):

Bottom of 1st	-	0.00	10.94	0.00	5.58	2.01	0.22	0.00
Top of 1st		3.57	10.94	3.57	-	-	5.58	3.57
Bottom of 2nd				5.58	-	-	10.94	5.58
Top of 2nd				18.09	5.58	-	10.94	18.09
Bottom of 3rd						-	5.58	18.09
Top of 3rd						2.01	0.22	5.58
Bottom of 4th								3.57
Top of 4th								0.00

Screw Spacing (in.):

1st Opening	-	12.72	57.26	12.72	28.63	19.09	14.31	12.72
2nd Opening				28.63	28.63	57.26	57.26	28.63
3rd Opening						19.09	14.31	28.63
4th Opening								12.72

Appendix F

Manufacturing Drawings: Roof Panels

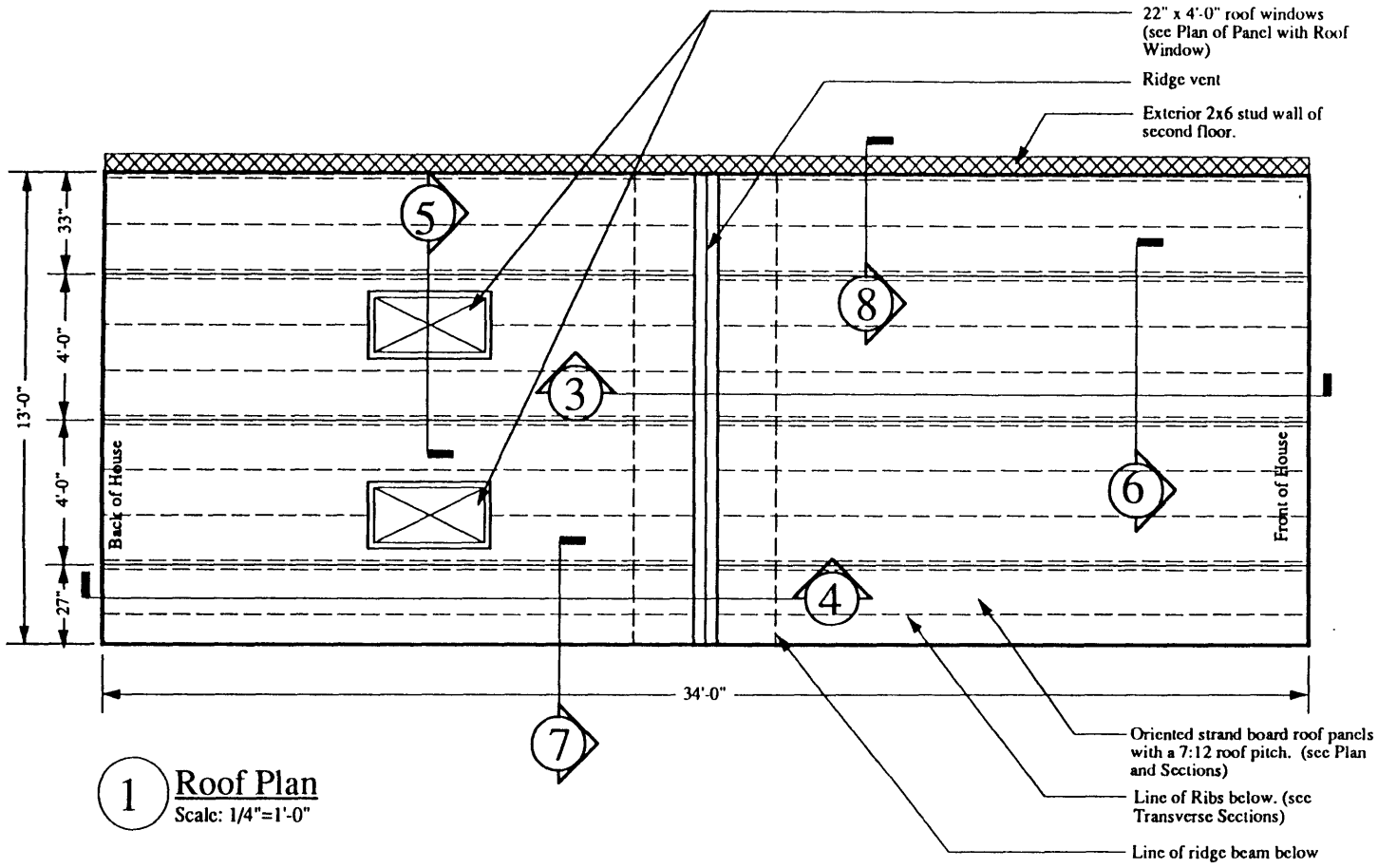

1 Roof Plan
Scale: 1/4"=1'-0"

IBACoS Project House **Roof Panels**	**I.H.C.T.P.** **Massachusetts Institute of Technology**	Date: 7/19/93 Drawn by: Mike McCormick Sheet Number: 1 of: 5

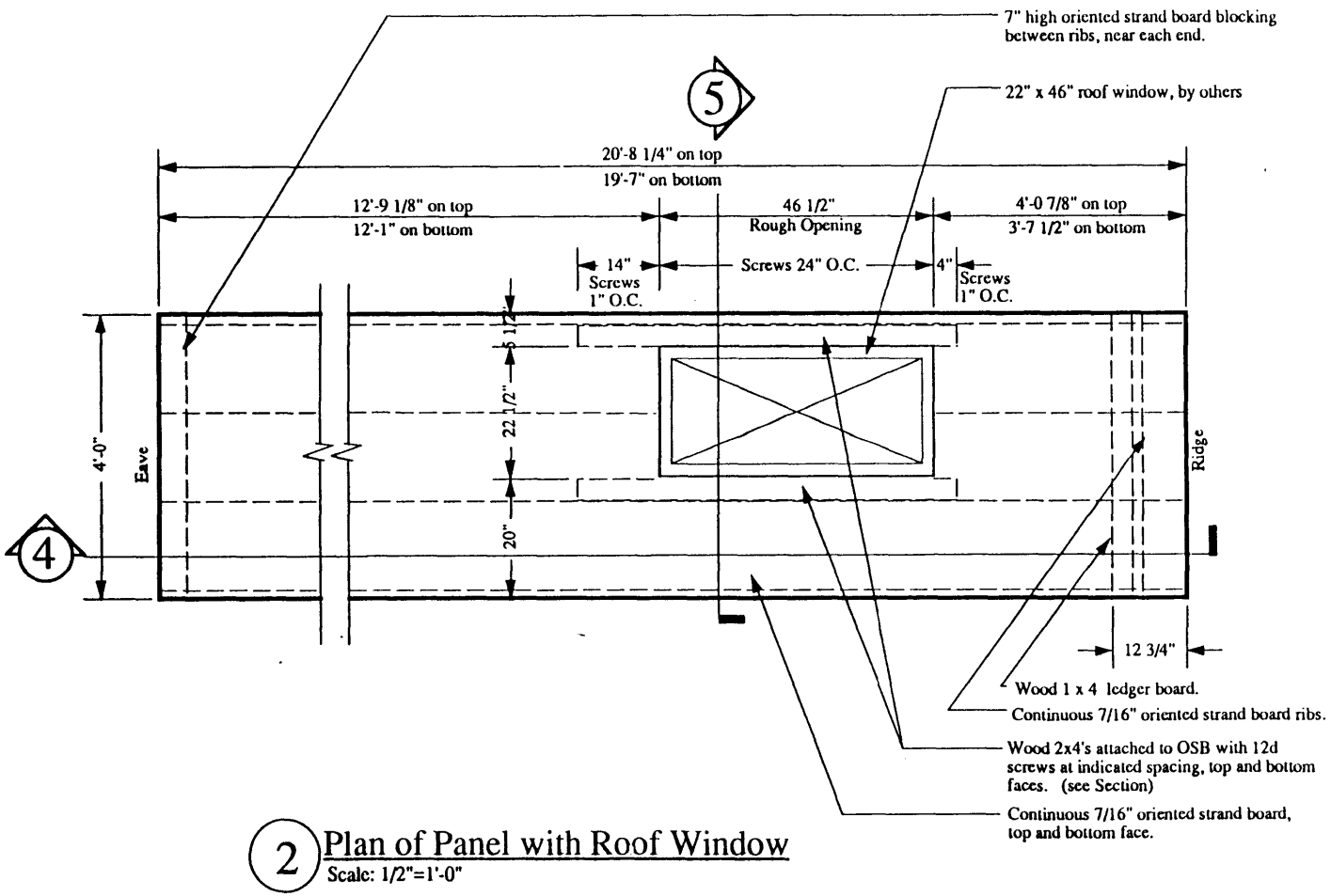

2 Plan of Panel with Roof Window
Scale: 1/2"=1'-0"

IBACoS Project House **Roof Panels**	**I.H.C.T.P.** **Massachusetts Institute of Technology**	Date: 7/19/93 Drawn by: Mike McCormick Sheet Number: 2 of: 5

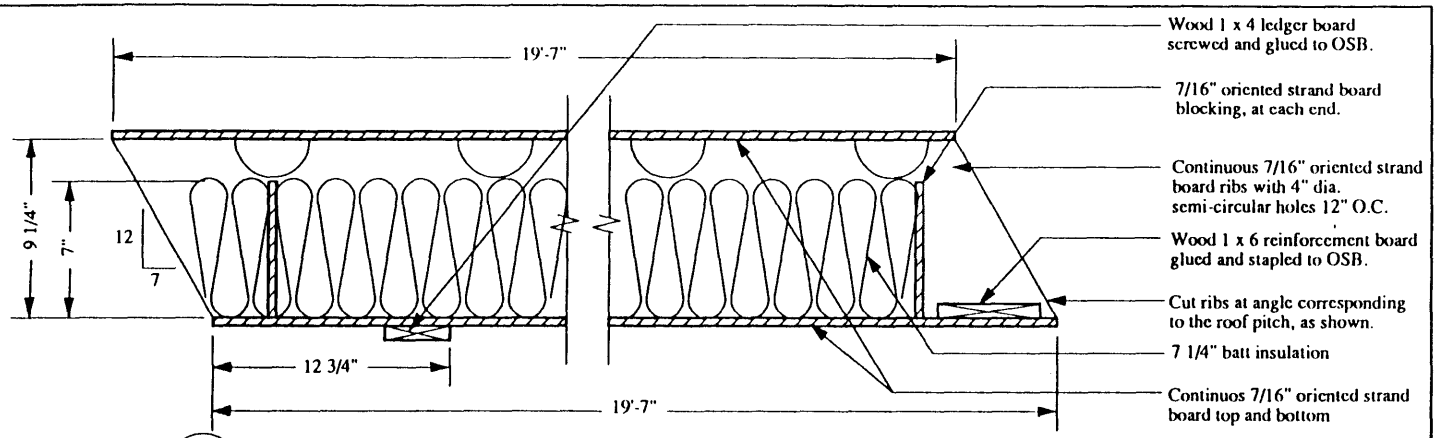

3 Longitudinal Section of Front Panels
Scale: 1 1/2"=1'-0"

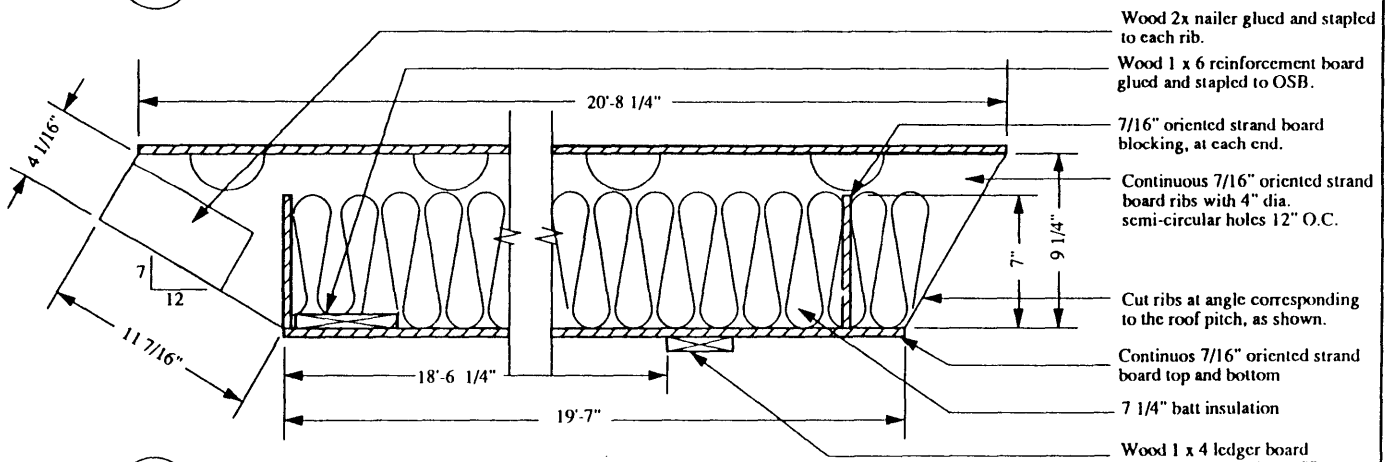

4 Longitudinal Section of Back Panels
Scale: 1 1/2"=1'-0"

IBACoS Project House **Roof Panels**	**I.H.C.T.P.** **Massachusetts Institute of Technology**	Date: 7/19/93 Drawn by: Mike McCormick Sheet Number: 3 of: 5

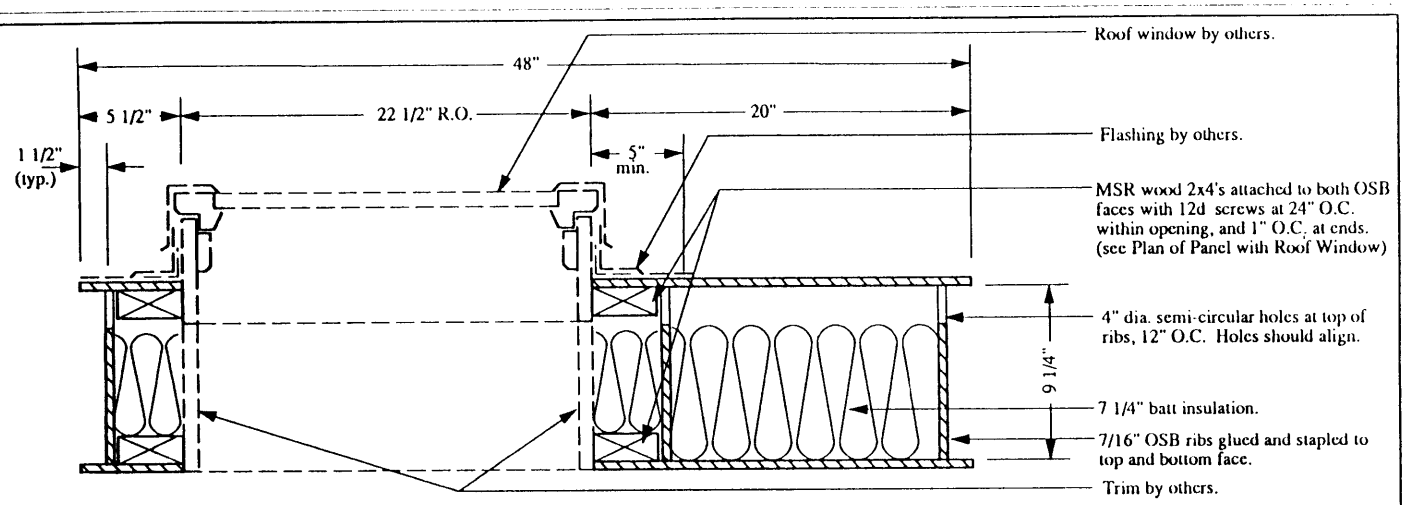

5 Transverse Section thru Panel with Roof Window
Scale: 1 1/2"=1'-0"

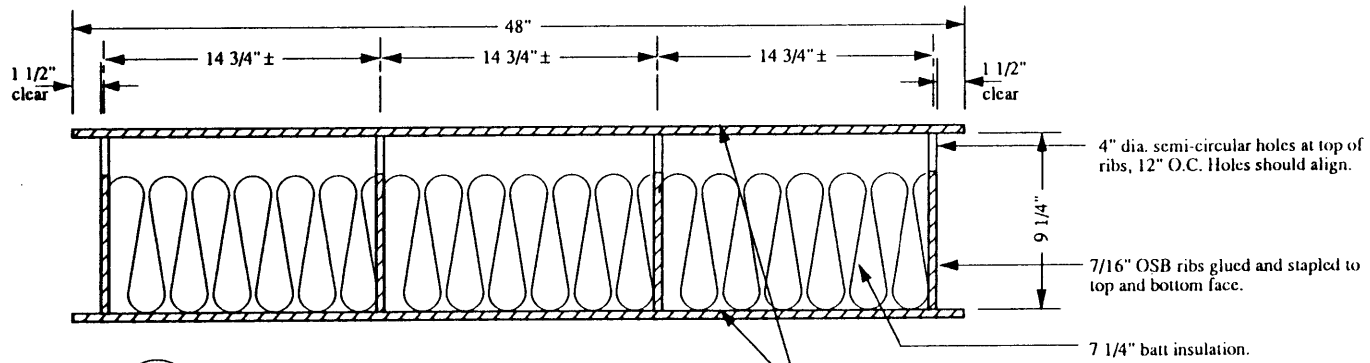

6 Transverse Section thru Typ. Panel
Scale: 1 1/2"=1'-0"

IBACoS Project House **Roof Panels**	I.H.C.T.P. Massachusetts Institute of Technology	Date: 7/19/93 Drawn by: Mike McCormick Sheet Number: 4 of: 5

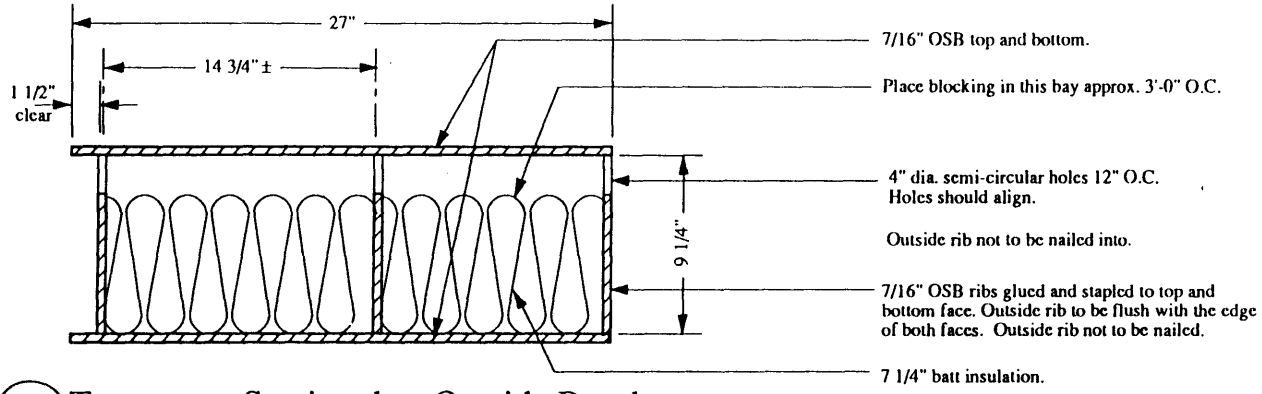

7 Transverse Section thru Outside Panel
Scale: 1 1/2"=1'-0"

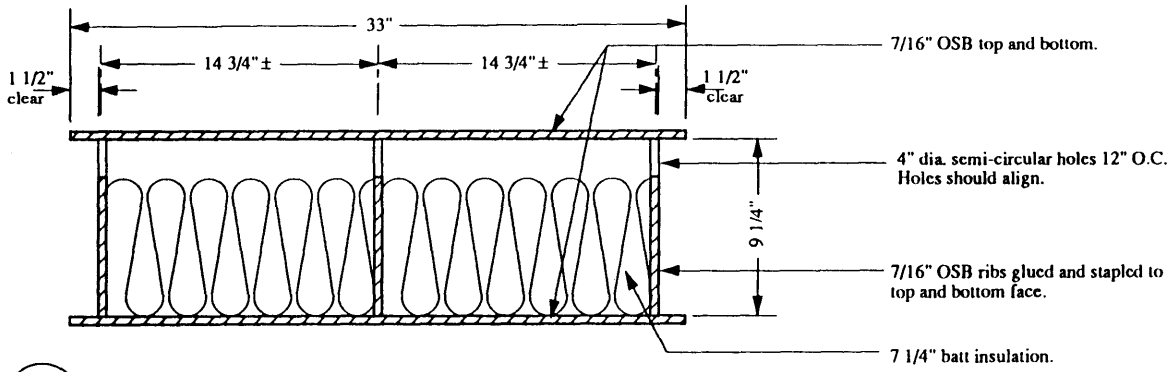

8 Transverse Section thru Inside Panel
Scale: 1 1/2"=1'-0"

IBACoS Project House **Roof Panels**	**I.H.C.T.P.** **Massachusetts Institute of Technology**	Date: 7/19/93 Drawn by: Mike McCormick Sheet Number: 5 of: 5

Appendix G

Manufacturing Drawings: Ridge Beam

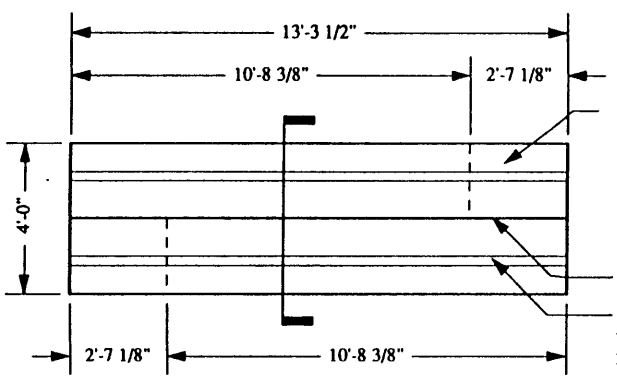

Two layers of 7/16" oriented strand board glued together. Top sheet to be contiuous. Bottom sheet to be cut form remenant of 24' long sheet.

Ridge line.

1x4 ledger board

Wood trusses approx. 32" O.C. ±

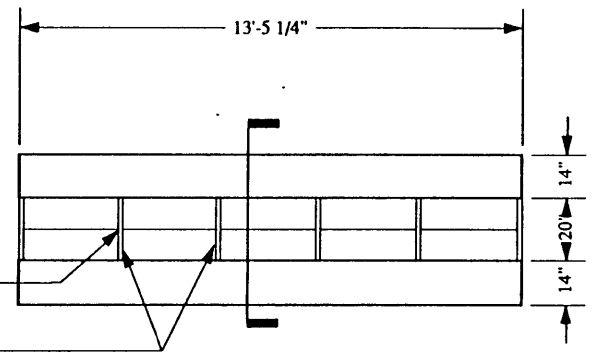

A Top View of Ridge Beam
Scale: 1/4"=1'-0"

B Bottom View of Ridge Beam
Scale: 1/4"=1'-0"

IBACoS Project House Ridge Beam	**I.H.C.T.P.** **Massachusetts Institute of Technology**	Date: 7/19/93 Drawn by: Mike McCormick Sheet Number: 1 of: 4

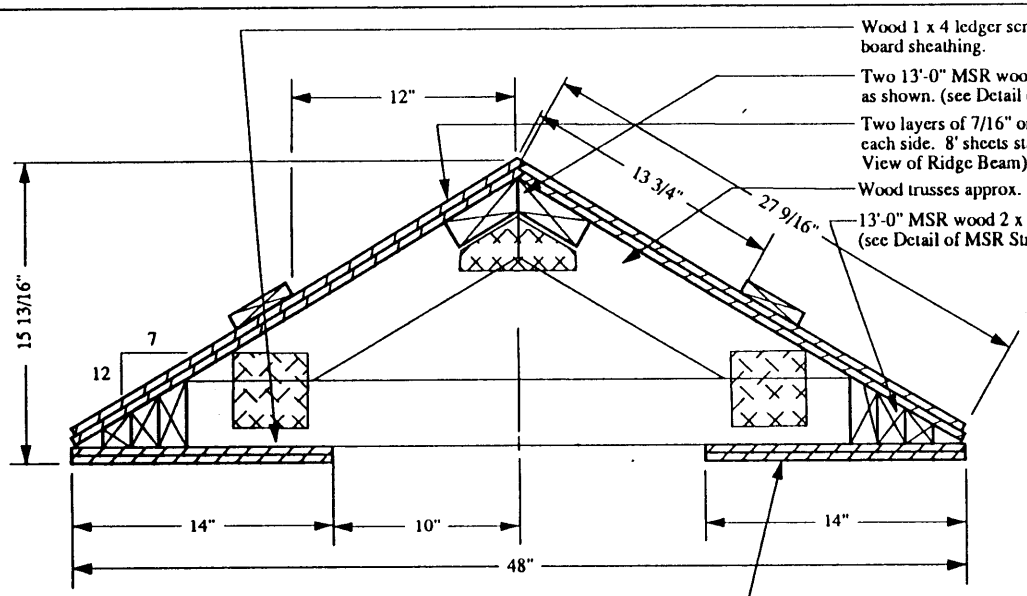

Wood 1 x 4 ledger screwed and glued to oriented strand board sheathing.

Two 13'-0" MSR wood 2 x 6's ripped at an angle and joined as shown. (see Detail of MSR Stringers below)

Two layers of 7/16" oriented strand board glued together, each side. 8' sheets staggered on alternating sides. (see Top View of Ridge Beam)

Wood trusses approx. 32" O.C. (see Truss Elevation)

13'-0" MSR wood 2 x 6's ripped in half, joined as shown. (see Detail of MSR Stringers below)

Two layers of 7/16" oriented strand board glued together, each side. 8' sheets staggered on alternating sides. (see Bottom View of Ridge Beam)

C Section thru Ridge Beam

Scale: 1 1/2" = 1'-0"

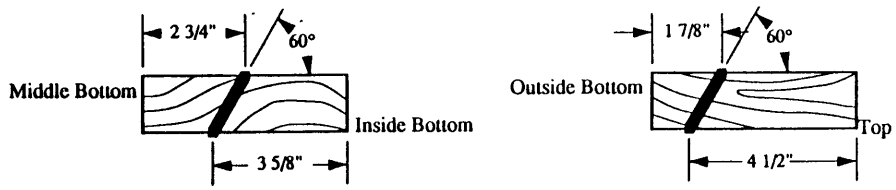

Note:
Rip two MSR wood 2 x 6's in each of the configurations shown and place in the appropriate location. All joints should be glued over the entire surface. E value of the wood should be a minimum of 2,000,000 psi.

D Detail of MSR Wood Stringers

Scale: 3" = 1'-0"

IBACoS Project House Ridge Beam	**I.H.C.T.P.** **Massachusetts Institute of Technology**	Date: 7/19/93 Drawn by: Mike McCormick Sheet Number: 2 of: 4

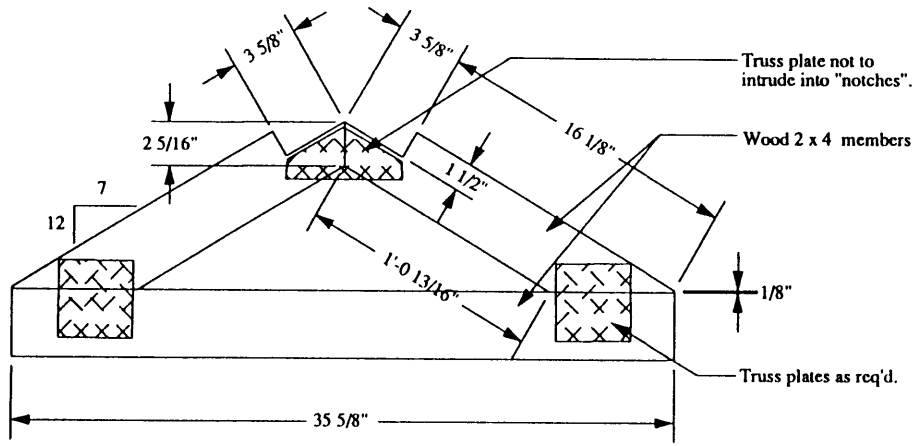

E Truss Elevation

Scale: 1 1/2"=1'-0"

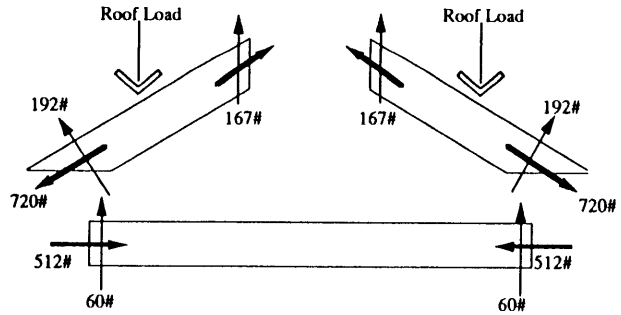

F Load Diagram

Not to Scale

Maximum Loads:

Bending moment in upper members:	1770"#
Axial Force:	720# Tension
	512# Compression
Shear in bottom joints:	512#
Shear in top joint:	167#

Note:

The loads given in this diagram reflect the worst cases in various trusses, given two different loading conditions:

1. Fully loaded beam.
2. Beam loaded on one side only.

IBACoS Project House Ridge Beam	**I.H.C.T.P.** **Massachusetts Institute of Technology**	Date: 7/19/93 Drawn by: Mike McCormick Sheet Number: 3 of: 4

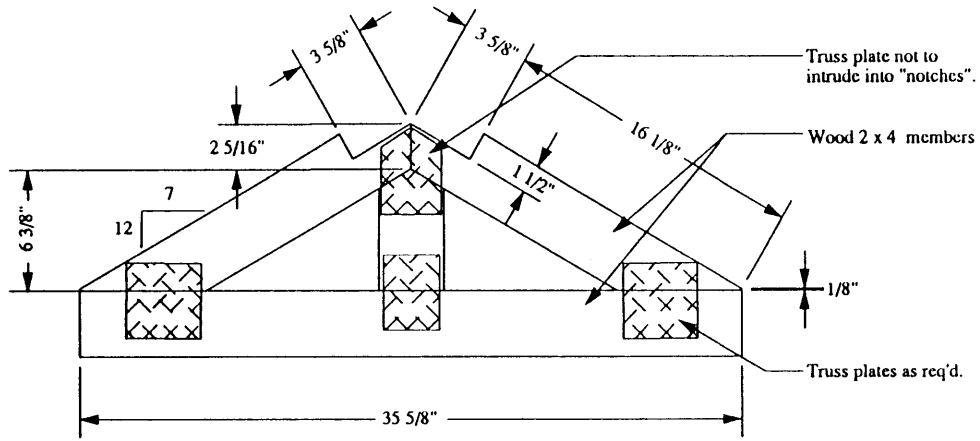

G Truss Elevation with Kingpost

Scale: 1 1/2"=1'-0"

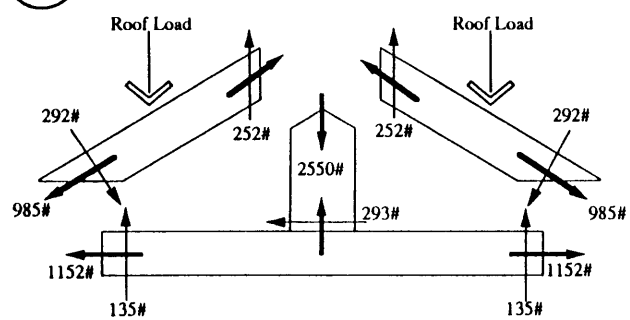

H Load Diagram

Not to Scale

Maximum Loads:

Bending moment in upper members:	2394"#
Axial Force:	1152# Tension
	2550# Compression
Shear in bottom joints:	1152#
Shear in top joint:	252# between top chords
	985# between kingpost and top chords.

Note:

The loads given in this diagram reflect the worst cases in various trusses, given two different loading conditions:

1. Fully loaded beam.
2. Beam loaded on one side only.

IBACoS Project House Ridge Beam	**I.H.C.T.P.** **Massachusetts Institute of Technology**	Date: 7/19/93 Drawn by: Mike McCormick Sheet Number: 4 of: 4

Appendix H

Manufacturing Drawing: Splines

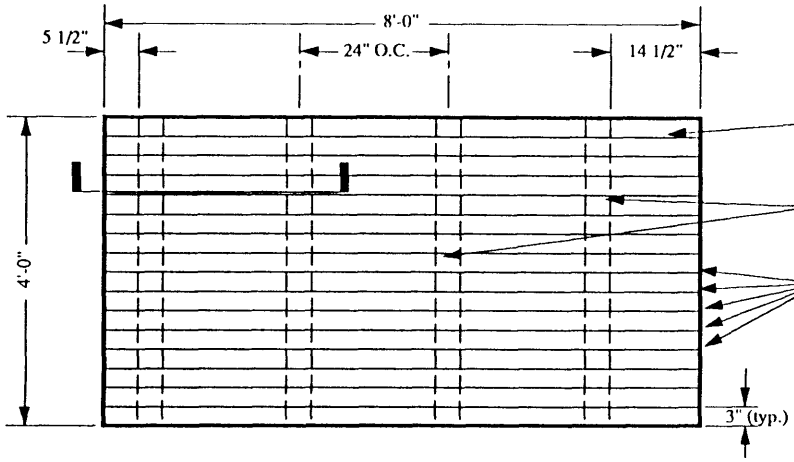

1 Plan of Panel for Splines
Scale: 1/2"=1'-0"

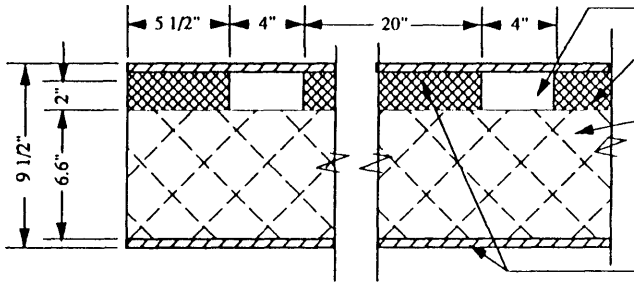

2 Section thru Splines
Scale: 1 1/2"=1'-0"

Attach roof panels to splines with 1" drywall screws at 3" O.C.
Open channels in compressible foam.
Compressible foam rubber.
Low-density PU foam insulation.
7 1/4" batt insulation.
7/16" OSB rib.
7/16" oriented strand board, top and bottom face.

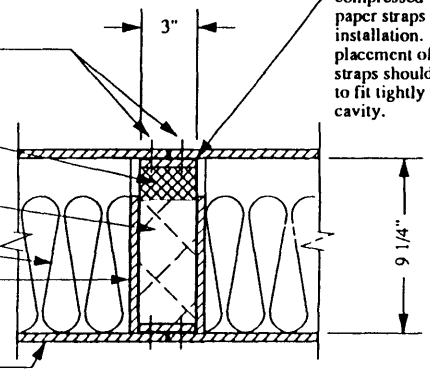

Splines should be compressed with paper straps prior to installation. After placement of splines, straps should be cut to fit tightly within cavity.

3 Section thru Spline at Panels
Scale: 1 1/2"=1'-0"

IBACoS Project House Panel Splines	I.H.C.T.P. Massachusetts Institute of Technology	Date: 8/5/93 Drawn by: Mike McCormick Sheet Number: 1 of: 1

Appendix J

Sample Analysis of Ridge Beam Variations

Input Variables:

Slope	0.83
Top Bevel Width	1.00
Bot. Chord Width	5.50
Bot. Chord Bevel	1.00

Dependent Variables:

			Eff. I(x)	c(x)	S(x)	Eff. I(y)	c(y)	S(y)
Top 2x8 Bevel	1.08	MSR (top)	2916	11.00	265.08	11,223	3.75	2992.85
Top Truss Width	8.70	MSR (bot.)	2916	8.38	348.15	11,223	23.26	482.56
Truss Height	16.38	OSB (top)	9719	12.53	775.68	37,411	24.00	1558.78
Top OSB Width	30.88	OSB (bot)	9719	9.25	1050.72	37,411	24.00	1558.78

Allowable Values for Wood (psi):

Type of Wood	E	Fb	Ft	Fc	Fv	G
OSB	6.00E+05	1050	950	950	1090	110,000
MSR	2.00E+06	2400	1925	1975	90	NA

Loads:

Live Ld.	40
Panel D.L.	10
Beam D.L.	35

Factors:

Time Factor	1.5
Snow Load Reduction Factor	9.90

Analysis:

Chords	A	y(i)	x(i)	EA	EAy(i)	I(x)	Add	EI(x)	EAx(i)	I(y)	Axx	EI(y)
Top	14.33	17.53	0.00	2.87E+07	5.02E+08	8.98	1200.74	2.42E+09	0.00E+00	40.94	0.37	8.26E+07
Bottom Left	7.83	2.14	-21.11	1.57E+07	3.35E+07	19.28	305.02	6.49E+08	-3.31E+08	12.20	3437.73	6.90E+09
Bottom Right	7.83	2.14	21.11	1.57E+07	3.35E+07	19.28	305.02	6.49E+08	3.31E+08	12.20	3437.73	6.90E+09
OSB Sheets												
OSB above NA	33.01	7.21										
Outer Left	0.00	0.00	0.00	0.00E+00	0.00E+00	0.00	0.00	0.00E+00	0.00E+00	0.00	0.00	0.00E+00
Inner Left	13.51	10.28	-11.93	8.11E+06	8.34E+07	633.45	49.25	4.10E+08	-9.67E+07	439.96	1870.91	1.39E+09
Outer Right	13.51	10.85	11.93	8.11E+06	8.80E+07	633.45	83.01	4.30E+08	9.67E+07	439.96	1870.91	1.39E+09
Inner Right	13.51	10.28	11.93	8.11E+06	8.34E+07	633.45	49.25	4.10E+08	9.67E+07	439.96	1870.91	1.39E+09
Bottom Left	14.98	-0.44	-18.00	8.99E+06	-3.93E+06	0.67	944.07	5.67E+08	-1.62E+08	126.00	4767.86	2.94E+09
Bottom Right	7.49	-0.22	18.00	4.49E+06	-9.83E+05	0.08	498.41	2.99E+08	8.09E+07	63.00	2383.93	1.47E+09
Totals				*9.78E+07*	*8.19E+08*	*1948.63*	*3434.78*	*5.83E+09*	*1.58E+07*	*1574.22*	*19640.36*	*2.24E+10*

Total EI(x): 5.83E+09 **Total EI(y):** 2.24E+10 **Y (in):** 8.38 **X (in.):** 0.16

Maximum Allowables Gravity Loads (#/ft):

Criteria:	Shear				Bending in MSR		Bending OSB		Deflection		Net	House
Span (ft):	Bot. Jt.	Top Jt	Side Jt	Thru NA	T at bot.	C @ Top	Bending	T @ top	Live Ld.	Total Ld.		Width
16	1,078	1,351	2,039	6,808	1,745	1,363	2,121	2,599	1,501	1,614	1,078	48
17	1,015	1,272	1,919	6,408	1,546	1,208	1,879	2,303	1,327	1,383	1,015	45
18	958	1,201	1,812	6,052	1,379	1,077	1,676	2,054	1,180	1,193	958	43
19	908	1,138	1,717	5,733	1,238	967	1,504	1,843	1,054	1,035	908	41
20	862	1,081	1,631	5,446	1,117	873	1,357	1,664	946	903	862	38
21	821	1,029	1,553	5,187	1,013	791	1,231	1,509	853	792	791	35
22	784	983	1,483	4,951	923	721	1,122	1,375	750	698	698	31
23	750	940	1,418	4,736	845	660	1,026	1,258	667	618	618	27
24	719	901	1,359	4,539	776	606	943	1,155	591	550	550	24
25	690	865	1,305	4,357	715	558	869	1,065	532	491	491	21
26	663	831	1,255	4,190	661	516	803	984	478	440	440	19
27	639	801	1,208	4,034	613	479	745	913	439	396	396	17
28	616	772	1,165	3,890	570	445	693	849	393	358	358	15
29	595	745	1,125	3,756	531	415	646	791	361	324	324	13
30	575	721	1,087	3,631	496	388	603	739	331	294	294	12
31	556	697	1,052	3,514	465	363	565	692	303	268	268	11
32	539	675	1,019	3,404	436	341	530	650	278	245	245	10

Note: Shaded cells indicate the governing criteria for each span.

Allowable Values for OSB are for 7/16" Structurewood® (Weyerhaeuser, 1988)

Allowable Values for MSR are for 2400 F(b) - 2.0E (MSR, 1992)

The above calculations are based on (UBC, 1988)

Appendix K

Comparison of Ridge Beam Variations

Maximum House Width

Top Chord:	2x8 & 2x4	2x8 & 2x4	2x6 & 2x4	2x6 Only	Ledgers	Final Des.
Beam Span	(1" Bevel)	(1.5" Bevel)	(1.5" Bevel)	(1.5" Bevel)		
16	48	48	48	42	39	50
17	45	45	45	37	34	47
18	43	43	41	33	31	44
19	41	39	37	29	27	42
20	38	35	33	26	24	40
21	35	31	30	23	22	37
22	31	29	27	21	20	32
23	27	26	25	19	18	29
24	24	23	22	18	17	25
25	21	20	20	16	15	22
26	19	18	18	15	14	20
27	17	16	16	14	13	18
28	15	14	14	12	12	16
29	13	13	13	11	11	14
30	12	12	11	10	10	13
31	11	10	10	9	9	12
32	10	9	9	8	8	10
Top Jt.	0.93	1.35	1.35	2.01	2.43	1.54
EI(x)	5.83E+09	5.61E+09	5.45E+09	4.79E+09	4.61E+09	6.14E+09
EI(y)	2.59E+10	2.59E+10	2.59E+10	2.63E+10	2.68E+10	2.52E+10

Appendix L

Analysis of the Final Design (for Lateral Loads)

Dependent Variables:

Slope: 0.58

Width of:	Inside	Cen.	Out.		Eff. I(x)	c(x)	S(x)	Eff. I(y)	c(y)	S(y)
Top MSR	3.63	4.06	4.50	MSR (top)	1654	8.83	187.44	1.16E+04	2.13	5438.18
Inside Bottom	3.63	3.19		MSR (bot)	1654	5.17	319.74	1.16E+04	19.61	591.36
Middle Bottom	2.75	2.31		OSB (top)	5514	9.71	567.88	3.87E+04	11.94	3236.16
Outside Bottom	1.88	1.44	1.00	OSB (bot)	5514	6.05	911.62	3.87E+04	18.00	2147.53
Top OSB Sheets	27.53									

Allowable Values for Wood (psi):

Type of Wood	E	Fb	Ft	Fc	Fv	G
MSR	2.00E+06	2400	1925	1975	90	128,000
OSB	6.00E+05	1050	950	950	1090	110,000

Loads:

Live Load:	40
Panel D.L.	10
Beam D.L.	30

Factors:

Time Factor:	1.5
Snow Load Reduction Factor:	5.13

Analysis

Chords	A	y(i)	x(i)	EA	EAy(i)	I(x)	Add	EI(x)	EAx(i)	I(y)	Axx	EI(y)
Top	12.19	12.33	0.00	2.44E+07	3.01E+08	5.96	623.87	1.26E+09	0.00E+00	89.89	0.51	1.81E+08
Bottom Left	10.41	1.28	-19.61	2.08E+07	2.66E+07	7.46	157.76	3.30E+08	-4.08E+08	15.67	4085.60	8.20E+09
Bottom Right	10.41	1.28	19.61	2.08E+07	2.66E+07	7.46	157.76	3.30E+08	4.08E+08	15.67	3918.79	7.87E+09
OSB Sheets												
OSB above NA	32.19	4.91										
Outer Left	0.00	0.00	0.00	0.00E+00	0.00E+00	0.00	0.00	0.00E+00	0.00E+00	0.00	0.00	0.00E+00
Inner Left	12.04	7.25	-11.94	7.23E+06	5.24E+07	567.60	52.07	3.72E+08	-8.63E+07	193.27	1660.18	1.11E+09
Outer Right	12.04	7.76	11.94	7.23E+06	5.61E+07	567.60	80.53	3.89E+08	8.63E+07	193.27	1660.18	1.11E+09
Inner Right	12.04	7.25	11.94	7.23E+06	5.24E+07	567.60	52.07	3.72E+08	8.63E+07	193.27	1660.18	1.11E+09
Bottom Left	12.25	-0.44	-18.00	7.35E+06	-3.22E+06	0.67	274.82	1.65E+08	-1.32E+08	126.00	3879.39	2.40E+09
Bottom Right	6.13	-0.22	18.00	3.68E+06	-8.04E+05	0.08	150.40	9.03E+07	6.62E+07	63.00	1939.70	1.20E+09
Totals				*9.87E+07*	*5.11E+08*	*1724.45*	*1549.28*	*3.31E+09*	*2.02E+07*	*890.05*	*18804.53*	*2.32E+10*

Total EI(x):	3.31E+09	**Total EI(y):**	2.32E+10	**Y (in.):**	5.17	**X (in.):**	0.20

Maximum Allowable Gravity Loads (#/ft):

Criteria:	Shear				Bending in MSR		Bending OSB		Deflection		Net	House
Span (ft):	Bot. Jt.	Top Jt	Side Jt	Thru NA	T at bot.	C @ Top	Bending	T @ top	Live Ld.	Total Ld.		Width
12	5,415	2,063	2,114	9,249	2,850	1,714	2,761	4,009	1,824	2,106	1,714	72
13	4,998	1,904	1,952	8,537	2,428	1,460	2,352	3,416	1,568	1,722	1,460	62
14	4,641	1,768	1,812	7,928	2,094	1,259	2,028	2,946	1,369	1,424	1,259	53
15	4,332	1,651	1,692	7,399	1,824	1,097	1,767	2,566	1,213	1,189	1,097	46
16	4,061	1,547	1,586	6,937	1,603	964	1,553	2,255	1,088	1,001	964	40
17	3,822	1,456	1,493	6,529	1,420	854	1,375	1,998	967	851	851	35
18	3,610	1,375	1,410	6,166	1,266	762	1,227	1,782	866	728	728	30
19	3,420	1,303	1,335	5,841	1,137	684	1,101	1,599	779	628	628	26
20	3,249	1,238	1,269	5,549	1,026	617	994	1,443	703	545	545	22
21	3,094	1,179	1,208	5,285	930	560	901	1,309	637	475	475	19
22	2,954	1,125	1,153	5,045	848	510	821	1,193	558	417	417	17
23	2,825	1,076	1,103	4,825	776	467	751	1,091	496	368	368	15
24	2,707	1,032	1,057	4,624	712	428	690	1,002	438	326	326	13
25	2,599	990	1,015	4,439	657	395	636	924	414	290	290	11
26	2,499	952	976	4,269	607	365	588	854	393	260	260	10

Note: Shaded cells indicate the governing criteria for each span.
Allowable Values for OSB are for 7/16" Structurewood® (Weyerhaeuser, 1988)
Allowable Values for MSR are for 2400 F(b) - 2.0E (MSR, 1992)
The above calculations are based on (UBC, 1988)

Maximum Allowable Lateral Loads (#/ft):

Height of Wall: 12 ft. Wind Pressure: 10 psf.

Criteria:	Shear				Bending in MSR		Bending OSB		Defl.	Net	House
Span (ft):	Bot. Jt.	at NA	Side Jt	Top Jt	Comp.	Tension	Comp.	Tension			Width
12	11,701	1,385	3,318	506,378	49,724	48,465	9,445	9,445	7,613	1,385	211
13	10,800	1,278	3,063	467,426	42,368	41,296	8,048	8,048	6,590	1,278	192
14	10,029	1,187	2,844	434,038	36,532	35,607	6,939	6,939	5,733	1,187	177
15	9,360	1,108	2,655	405,102	31,823	31,018	6,045	6,045	5,011	1,108	163
16	8,775	1,039	2,489	379,783	27,970	27,262	5,313	5,313	4,400	1,039	151
17	8,259	978	2,342	357,443	24,776	24,149	4,706	4,706	3,879	978	141
18	7,800	923	2,212	337,585	22,100	21,540	4,198	4,198	3,433	923	132
19	7,390	875	2,096	319,818	19,835	19,332	3,768	3,768	3,049	875	123
20	7,020	831	1,991	303,827	17,901	17,447	3,400	3,400	2,718	831	116
21	6,686	791	1,896	289,359	16,236	15,825	3,084	3,084	2,431	791	109
22	6,382	755	1,810	276,206	14,794	14,419	2,810	2,810	2,181	755	103
23	6,105	723	1,731	264,197	13,535	13,193	2,571	2,571	1,963	723	97
24	5,850	693	1,659	253,189	12,431	12,116	2,361	2,361	1,772	693	92
25	5,616	665	1,593	243,061	11,456	11,166	2,176	2,176	1,604	665	87
26	5,400	639	1,532	233,713	10,592	10,324	2,012	2,012	1,455	639	83

Note: Shaded cells indicate the governing criteria for each span.
Allowable Values for OSB are for 7/16" Structurewood® (Weyerhaeuser, 1988)
Allowable Values for MSR are for 2400 F(b) - 2.0E (MSR, 1992)
The above calculations are based on (UBC, 1988)

Appendix M

Input File for the FEM

```
*HEADING
IBACOS RIDGE BEAM - 7/12 PITCH
********MESH DEFINITION********
*NODE
1,0,0,0.
41,0,160,0.
*NGEN,NSET=N1
1,41
*NCOPY,CHANGE NUMBER=50,OLDSET=N1,SHIFT,NEWSET=N50
3,0,1.75
0,0,0,0,0,1,0
*NCOPY,CHANGE NUMBER=100,OLDSET=N1,SHIFT,NEWSET=N100
6,0,3.5
0,0,0,0,0,1,0
*NCOPY,CHANGE NUMBER=150,OLDSET=N1,SHIFT,NEWSET=N150
9,0,5.25
0,0,0,0,0,1,0
*NCOPY,CHANGE NUMBER=200,OLDSET=N1,SHIFT,NEWSET=N200
12,0,7
0,0,0,0,0,1,0
*NCOPY,CHANGE NUMBER=250,OLDSET=N1,SHIFT,NEWSET=N250
15,0,8.75
0,0,0,0,0,1,0
*NCOPY,CHANGE NUMBER=300,OLDSET=N1,SHIFT,NEWSET=N300
18,0,10.5
0,0,0,0,0,1,0
```

```
*NCOPY,CHANGE NUMBER=350,OLDSET=N1,SHIFT,NEWSET=N350
21,0,12.25
0,0,0,0,0,1,0
*NCOPY,CHANGE NUMBER=400,OLDSET=N1,SHIFT,NEWSET=N400
24,0,14
0,0,0,0,0,1,0
*NCOPY,CHANGE NUMBER=450,OLDSET=N1,SHIFT,NEWSET=N450
27,0,12.25
0,0,0,0,0,1,0
*NCOPY,CHANGE NUMBER=500,OLDSET=N1,SHIFT,NEWSET=N500
30,0,10.5
0,0,0,0,0,1,0
*NCOPY,CHANGE NUMBER=550,OLDSET=N1,SHIFT,NEWSET=N550
33,0,8.75
0,0,0,0,0,1,0
*NCOPY,CHANGE NUMBER=600,OLDSET=N1,SHIFT,NEWSET=N600
36,0,7
0,0,0,0,0,1,0
*NCOPY,CHANGE NUMBER=650,OLDSET=N1,SHIFT,NEWSET=N650
39,0,5.25
0,0,0,0,0,1,0
*NCOPY,CHANGE NUMBER=700,OLDSET=N1,SHIFT,NEWSET=N700
42,0,3.5
0,0,0,0,0,1,0
*NCOPY,CHANGE NUMBER=750,OLDSET=N1,SHIFT,NEWSET=N750
45,0,1.75
0,0,0,0,0,1,0
*NCOPY,CHANGE NUMBER=800,OLDSET=N1,SHIFT,NEWSET=N800
48,0,0
0,0,0,0,0,1,0
*NCOPY,CHANGE NUMBER=1050,OLDSET=N1,SHIFT,NEWSET=N1050
3.5,0,0
0,0,0,0,0,1,0
*NCOPY,CHANGE NUMBER=1100,OLDSET=N1,SHIFT,NEWSET=N1100
7,0,0
0,0,0,0,0,1,0
*NCOPY,CHANGE NUMBER=1150,OLDSET=N1,SHIFT,NEWSET=N1150
10.5,0,0
0,0,0,0,0,1,0
*NCOPY,CHANGE NUMBER=1200,OLDSET=N1,SHIFT,NEWSET=N1200
14,0,0
0,0,0,0,0,1,0
*NCOPY,CHANGE NUMBER=1300,OLDSET=N1,SHIFT,NEWSET=N1300
34,0,0
0,0,0,0,0,1,0
*NCOPY,CHANGE NUMBER=1350,OLDSET=N1,SHIFT,NEWSET=N1350
37.5,0,0
0,0,0,0,0,1,0
*NCOPY,CHANGE NUMBER=1400,OLDSET=N1,SHIFT,NEWSET=N1400
41,0,0
0,0,0,0,0,1,0
```

```
*NCOPY,CHANGE NUMBER=1450,OLDSET=N1,SHIFT,NEWSET=N1450
44.5,0,0
0,0,0,0,0,1,0
*NODE
2001,24,0,0.
2041,24,160,0.
*NGEN,NSET=N2000
2001,2041
*NSET, NSET=NENDS
1,801,1051,1101,1151,1201,1301,1351,1401,1451,2001,
41,841,1091,1141,1191,1241,1341,1391,1441,1491,2041
*NSET, NSET=MID
21,421,821,1221,1321
*NSET, NSET=LD200
209,217,225,233
*NSET, NSET=LD600
609,617,625,633
********SHEATHING INPUT********
*ELEMENT, TYPE=S8R
1001,3,1,101,103,2,51,102,53
*ELGEN, ELSET=LEFT
1001,20,2,10
*ELEMENT, TYPE=S8R
1002,103,101,201,203,102,151,202,153
*ELGEN, ELSET=LEFT
1002,20,2,10
*ELEMENT, TYPE=S8R
1003,203,201,301,303,202,251,302,253
*ELGEN, ELSET=RIGHT
1003,20,2,10
*ELEMENT, TYPE=S8R
1004,303,301,401,403,302,351,402,353
*ELGEN, ELSET=RIGHT
1004,20,2,10
*ELEMENT, TYPE=S8R
2004,501,503,403,401,502,453,402,451
*ELGEN, ELSET=RIGHT
2004,20,2,10
*ELEMENT, TYPE=S8R
2003,601,603,503,501,602,553,502,551
*ELGEN, ELSET=RIGHT
2003,20,2,10
*ELEMENT, TYPE=S8R
2002,701,703,603,601,702,653,602,651
*ELGEN, ELSET=BOT
2002,20,2,10
*ELEMENT, TYPE=S8R
2001,801,803,703,701,802,753,702,751
*ELGEN, ELSET=BOT
2001,20,2,10
*ELEMENT, TYPE=S8R
3001,1,3,1103,1101,2,1053,1102,1051
```

```
*ELGEN, ELSET=RIGHT
3001,20,2,10
*ELEMENT, TYPE=S8R
3002,1101,1103,1203,1201,1102,1153,1202,1151
*ELGEN, ELSET=RIGHT
3002,20,2,10
*ELEMENT, TYPE=S8R
3003,1301,1303,1403,1401,1302,1353,1402,1351
*ELGEN, ELSET=RIGHT
3003,20,2,10
*ELEMENT, TYPE=S8R
3004,1401,1403,803,801,1402,1453,802,1451
*ELGEN, ELSET=RIGHT
3004,20,2,10
*ELSET, ELSET=OSB
LEFT, RIGHT, BOT
*SHELL SECTION, ELSET=OSB, MATERIAL=OSB
.875
*ELSET, ELSET=TOPOSB
1001,1002,1003,1004,1011,1012,1013,1014,1021,1022,1023,1024,
1031,1032,1033,1034,1041,1042,1043,1044,1051,1052,1053,1054,
1061,1062,1063,1064,1071,1072,1073,1074,1081,1082,1083,1084,
1091,1092,1093,1094,
2001,2002,2003,2004,2011,2012,2013,2014,2021,2022,2023,2024,
2031,2032,2033,2034,2041,2042,2043,2044,2051,2052,2053,2054,
2061,2062,2063,2064,2071,2072,2073,2074,2081,2082,2083,2084
2091,2092,2093,2094
*ELSET, ELSET=BOTOSB
3001,3002,3003,3004,3011,3012,3013,3014,3021,3022,3023,3024,
3031,3032,3033,3034,3041,3042,3043,3044,3051,3052,3053,3054,
3061,3062,3063,3064,3071,3072,3073,3074,3081,3082,3083,3084,
3091,3092,3093,3094
*ELSET, ELSET=HALF
TOPOSB, BOTOSB
********STRINGER INPUT********
*ELEMENT, TYPE=B33
1,1,2
*ELGEN, ELSET=BLS
1,40,1,1
*ELEMENT, TYPE=B33
401,401,402
*ELGEN, ELSET=TOP
401,40,1,1
*ELEMENT, TYPE=B33
801,801,802
*ELGEN, ELSET=BRS
801,40,1,1
*BEAM SECTION, SECTION=TRAPEZOID, ELSET=BLS, MATERIAL=MSR
3.625,4.5,1,1.824
*BEAM SECTION, SECTION=ARBITRARY, ELSET=TOP, MATERIAL=MSR
2,2.05,3.51,0,0,1.5
2.05,-3.51,1.5
```

```
*BEAM SECTION, SECTION=TRAPEZOID, ELSET=BRS, MATERIAL=MSR
3.625,4.5,1,1.824
*ELSET, ELSET=STRINGER
BLS, TOP, BRS
********TRUSS INPUT********
*ELEMENT, TYPE=B33
101,1,101
*ELEMENT, TYPE=B33
102,101,201
*ELEMENT, TYPE=B33
103,201,301
*ELEMENT, TYPE=B33
104,301,401
*ELEMENT, TYPE=B33
201,401,501
*ELEMENT, TYPE=B33
202,501,601
*ELEMENT, TYPE=B33
203,601,701
*ELEMENT, TYPE=B33
204,701,801
*ELGEN, ELSET=TLEFT
101,6,8,10
*ELGEN, ELSET=TLEFT
102,6,8,10
*ELGEN, ELSET=TLEFT
103,6,8,10
*ELGEN, ELSET=TLEFT
104,6,8,10
*ELGEN, ELSET=TRIGHT
201,6,8,10
*ELGEN, ELSET=TRIGHT
202,6,8,10
*ELGEN, ELSET=TRIGHT
203,6,8,10
*ELGEN, ELSET=TRIGHT
204,6,8,10
*ELEMENT, TYPE=B33
301,1,1101
*ELEMENT, TYPE=B33
302,1101,1201
*ELEMENT, TYPE=B33
303,1201,2001
*ELEMENT, TYPE=B33
304,2001,1301
*ELEMENT, TYPE=B33
305,1301,1401
*ELEMENT, TYPE=B33
306,1401,801
*ELGEN, ELSET=TBOT
301,6,8,10
```

```
*ELGEN, ELSET=TBOT
302,6,8,10
*ELGEN, ELSET=TBOT
303,6,8,10
*ELGEN, ELSET=TBOT
304,6,8,10
*ELGEN, ELSET=TBOT
305,6,8,10
*ELGEN, ELSET=TBOT
306,6,8,10
*BEAM SECTION, SECTION=RECT, ELSET=TLEFT, MATERIAL=WOOD
3.5,1.5
0.5039,0,-0.8638
*BEAM SECTION, SECTION=RECT, ELSET=TRIGHT, MATERIAL=WOOD
3.5,1.5
-0.5039,0,-0.8638
*BEAM SECTION, SECTION=RECT, ELSET=TBOT, MATERIAL=WOOD
3.5,1.5
********KINGPOST********
*ELEMENT, TYPE=B33, ELSET=POST
501,2001,401
*ELEMENT, TYPE=B33, ELSET=POST
502,2041,441
*BEAM SECTION, SECTION=RECT, ELSET=POST, MATERIAL=WOOD
3.5,1.5
1,0,0
********TRUSS IDENTIFICATION********
*ELSET, ELSET=TRUSS1
101,102,103,104,201,202,203,204,301,302,303,304,305,306,501
*ELSET, ELSET=TRUSS2
111,112,113,114,211,212,213,214,311,312,313,314,315,316
*ELSET, ELSET=TRUSS3
121,122,123,124,221,222,223,224,321,322,323,324,325,326
********MATERIAL DEFINITION********
*MATERIAL, NAME=OSB
*ELASTIC, TYPE=ENGINEERING CONSTANTS
5E5, 1.35E6, 8.5E5, 0.449,,,1.1E5, 1.1E5
1.1E5
*MATERIAL, NAME=MSR
*ELASTIC, TYPE=ISOTROPIC
2E6, 0.449
*MATERIAL, NAME=WOOD
*ELASTIC, TYPE=ISOTROPIC
1.5E6, 0.449
********BOUNDARY CONDITIONS********
*BOUNDARY
NENDS,3
*BOUNDARY
421,1
421,2
421,6
```

```
********MESH PLOTTING********
*VIEWPOINT, DEFINITION=MODEL AXIS ROTATION
-45,0,-45
*PLOT MODE, DOT SIZE=.003
*PLOT
IBACOS RIDGE BEAM - MESH
,,,,,,0.1,1
*DRAW
********LOAD DEFINITION********
*STEP, PERTURBATION
*STATIC
*CLOAD
201,3,-460
601,3,-460
LD200,3,-920
LD600,3,-920
241,3,-460
641,3,-460
********PRINT OUTPUT********
*EL PRINT, ELSET=STRINGER, POSITION=NODES
SF
*EL PRINT, ELSET=TRUSS1, POSITION=NODES
SF
*EL PRINT, ELSET=TRUSS2, POSITION=NODES
SF
*EL PRINT, ELSET=TRUSS3, POSITION=NODES
SF
*EL PRINT, ELSET=HALF, POSITION=NODES
SF1,SF2,SF3,SM1,SM2
*NODE PRINT, NSET=MID
U1,U2,U3
**********DISPLACED PLOT********
*PLOT MODE, DOTSIZE=0
*PLOT
IBACOS RIDGE BEAM - DISPLACED
,,,,,,0.1,1
*VIEWPOINT, DEFINITION=MODEL AXIS ROTATION
-45,0,-45
*DISPLACED
U
********STRINGER PLOTS********
*VIEWPOINT, DEFINITION=MODEL AXIS ROTATION
-90,0,-90
*PLOT
IBACOS RIDGE BEAM - AXIAL FORCE IN STRINGERS
,,,,,,0.1,1
*NO ERASE
```

```
*DETAIL, ELSET=BRS
*CONTOUR
SF1,,-7.5E3,7.5E3
*DETAIL, ELSET=TOP
*CONTOUR
SF1,,-7.5E3,7.5E3
*ERASE
*PLOT
IBACOS RIDGE BEAM - MOMENTS IN STRINGERS
,,,,,,0.1,1
*NO ERASE
*DETAIL, ELSET=BRS
*CONTOUR
SM2,,-2000,2000
*DETAIL, ELSET=TOP
*CONTOUR
SM2,,-2000,2000
*ERASE
********TOP OSB PLOTS********
*VIEWPOINT, DEFINITION=MODEL AXIS ROTATION
-45,0,-45
*DETAIL, ELSET=TOPOSB
*PLOT MODE, FILL=YES
*PLOT, COLORS=16
IBACOS RIDGE BEAM - AXIAL STRESS IN OSB
,,,,,,0.1,1
*CONTOUR
S22,,-400,400,,3
*CONTOUR
S11,,-100,100,,3
*PLOT, COLORS=16
IBACOS RIDGE BEAM - SHEAR STRESS IN OSB
,,,,,,0.1,1
*CONTOUR
S12,,-200,200,,3
********BOTTOM OSB PLOTS********
*DETAIL, ELSET=BOTOSB
*PLOT, COLORS=16
IBACOS RIDGE BEAM - AXIAL STRESS IN BOTTOM OSB
,,,,,,0.1,1
*CONTOUR
S22,,0,250,,3
*PLOT, COLORS=16
IBACOS RIDGE BEAM - SHEAR STRESS IN BOTTOM OSB
,,,,,,0.1,1
*CONTOUR
S12,,-50,50,,3
********FEM COMPLETE********
*END STEP
```

References

(ABAQUS, 1992) *ABAQUS, Version 5.2: Users Manual*
Hibbitt, Karlsson & Sorensen, Inc.
Pawtuckett, RI

(APA, 1989) *APA Design/Construction Guide: Diaphragms*
American Plywood Association
Tacoma, WA,

(Bristolite, 1991) Bristolite®
Product Literature on Roof Windows

(Chajes, 1990) Chajes, Alexander
Structural Analysis, 2nd Edition
Prentice Hall, Inc.
Englewood Cliffs, NJ

(Crowley, 1989) Crowley, John
Construction Cost Study
Unpublished Report, MIT

(Dentz, 1991) Dentz, Jordan
The Design of a Panelized Roof System for Residential Construction
M.S. Thesis
Department of Architecture, MIT

(NFPA, 1991) *Design Values for Wood Construction*
National Forest Products Association
Washington, D.C.

(Fleming, 1989) Fleming, John F.
Computer analysis of Structural Systems
McGraw-Hill Book Company
New York, NY

(Herbert, 1984) Herbert, Gilbert
The Dream of the Factory-Made House
MIT Press
Cambridge, MA

(IBACoS, 1992) Integrating Building and Construction Systems,
Construction Documents

(Kucirka, 1989) Kucirka, Mark
Analysis and design of Sandwich Panel Residential Roof Systems
M.S. Thesis
Department of Civil Engineering, MIT

(Morse- Fortier, FLW, 1991) Morse-Fortier, Leonard
Frank Lloyd Wright's Usonian Automatic Building System: Lessons and Limitations in a Lost Paradigm for Manufactured Housing
Unpublished Paper
MIT

(Morse-Fortier, 1994) Morse-Fortier, Leonard
The Structural Implications of Increased Panel Use in Wood Frame Buildings
Unpublished Paper
MIT

(SPIB, 1991) *MSR, Machine Stress Rated Lumber*
SPIB® Techninical Note
Southern Pine Inspection Bureau

(MSR, 1992) MSR Lumber Producers Council
Mill Index and Product Guide
as seen in *Automated Builder*
vol. 29, no. 11, November, 1992
pp. 66-67.

(NDS, 1991) *National Design Specification for Wood Construction, 1991 Edition*
National Forest Products Association
Washington, D.C.

(NFPA, 1960) National Forest Products Association
The Wood-Frame House as a Structural Unit
presented at Meeting of the Wood Engineering Division of the Forest Products Research Society
New York, NY

(Parent, 1991) Parent, Michel and John Crowley
Engineered Roof Products
Unpublished Paper
MIT

(Peavey, 1991) Peavey, John
Thermal Performance of Roof Panel Systems
Unpublished Paper
MIT

(Phillips, 1994) Phillips, David
M.S. Thesis
Department of Mechanical Engineering, MIT

(PDS, 1990) *Plywood Design Specification: Design and Fabrication of Plywood Stressed-Skin Panels*
American Plywood Association
Tacoma, WA,

(Porter, 1985) Porter, Michael E.
Competitive Advantage
The Free Press
New York, NY

(Quinn, 1994) Quinn, Randy
"New Alliance Will Push Research"
Architectural Record
McGraw-Hill, Inc.
vol.182, no. 3, March 1994
p.26.

(Shodek, 1992) Shodek, Daniel L.
Structures, 2nd Edition
Prentice-Hall, Inc.
Englewood Cliffs, NJ

(SFPA, 1991) *Southern Pine Use Guide*
Southern Forest Products Association
Kenner, LA

(Thornburn, 1960) Thornburn, H.J. & W.R. Shriever
"Loading on Full-Scale House Roofs"
Report No. 312
ASTM
Philadelphia, PA

(Tuomi, 1977) Tuomi, R.L. & D.S. Gromala
"Racking Strength of Walls: Let-in Corner Bracing, Sheet Materials, and Effect of Loading Materials"
Report No. FPL. 301
USDA Forest Products Laboratory
Madison, WI

(UBC, 1988) *Uniform Building Code 1988*
International Conference of Building Officials
Whittier, CA

(UBC, 1991) *Uniform Building Code 1991*
International Conference of Building Officials
Whittier, CA

(FPL, 1974) U.S. Forest Products Laboratory
Wood Engineering Handbook
Prentice-Hall, Inc.
Englewood Cliffs, NJ

(Velux, 1992) Velux®
Product Literature on Roof Windows

(Ward, 1994) Ward, Susie
M.S. Thesis
Department of Mechanical Engineering, MIT

(Wasco, 1991) Wasco®
Product Literature on Skylites

(Weyerhaeuser, 1988) Weyerhaeuser®
Product literature on Structurewood

(Wright, 1988) Wright, Frank Lloyd
In the Realm of Ideas
Southern Illinois University Press
Carbondale, IL

(Zienkiewicz, 1977) Zienkiewicz, O.C.
The Finite Element Method, 3rd Edition
McGraw-Hill Book Company
London