MIT Libraries | DSpace@MIT

MIT Open Access Articles

Who Needs Crossings? Hardness of Plane Graph Rigidity

The MIT Faculty has made this article openly available. ***Please share*** how this access benefits you. Your story matters.

Citation: Abel, Zachary et al. "Who Needs Crossings? Hardness of Plane Graph Rigidity." 32nd International Symposium on Computational Geometry (SoCG 2016), June 14-17 2016, Boston, Massachusetts, USA , edited by Sandor Fekete and Anna Lubiw, Dagstuhl Publishing, June 2016
© Zachary Abel, Erik D. Demaine, Martin L. Demaine, Sarah Eisenstat, Jayson Lynch, and Tao B. Schardl

As Published: http://dx.doi.org/10.4230/LIPIcs.SoCG.2016.3

Publisher: Dagstuhl Publishing

Persistent URL: http://hdl.handle.net/1721.1/111968

Version: Final published version: final published article, as it appeared in a journal, conference proceedings, or other formally published context

Terms of use: Creative Commons Attribution 4.0 International License

Massachusetts Institute of Technology

Who Needs Crossings? Hardness of Plane Graph Rigidity

Zachary Abel*[1], Erik D. Demaine[2], Martin L. Demaine[3], Sarah Eisenstat[4], Jayson Lynch[5], and Tao B. Schardl[6]

1 **MIT Department of Mathematics, 77 Massachusetts Ave., Cambridge, MA 02139, USA**
zabel@math.mit.edu
2 **MIT CSAIL, 32 Vassar St., Cambridge, MA 02139, USA**
edemaine@mit.edu
3 **MIT CSAIL, 32 Vassar St., Cambridge, MA 02139, USA**
mdemaine@mit.edu
4 **MIT CSAIL, 32 Vassar St., Cambridge, MA 02139, USA**
seisenst@mit.edu
5 **MIT CSAIL, 32 Vassar St., Cambridge, MA 02139, USA**
jaysonl@mit.edu
6 **MIT CSAIL, 32 Vassar St., Cambridge, MA 02139, USA**
neboat@mit.edu

Abstract

We exactly settle the complexity of graph realization, graph rigidity, and graph global rigidity as applied to three types of graphs: "globally noncrossing" graphs, which avoid crossings in all of their configurations; matchstick graphs, with unit-length edges and where only noncrossing configurations are considered; and unrestricted graphs (crossings allowed) with unit edge lengths (or in the global rigidity case, edge lengths in $\{1, 2\}$). We show that all nine of these questions are complete for the class $\exists\mathbb{R}$, defined by the Existential Theory of the Reals, or its complement $\forall\mathbb{R}$; in particular, each problem is (co)NP-hard.

One of these nine results – that realization of unit-distance graphs is $\exists\mathbb{R}$-complete – was shown previously by Schaefer (2013), but the other eight are new. We strengthen several prior results. Matchstick graph realization was known to be NP-hard (Eades & Wormald 1990, or Cabello et al. 2007), but its membership in NP remained open; we show it is complete for the (possibly) larger class $\exists\mathbb{R}$. Global rigidity of graphs with edge lengths in $\{1, 2\}$ was known to be coNP-hard (Saxe 1979); we show it is $\forall\mathbb{R}$-complete.

The majority of the paper is devoted to proving an analog of Kempe's Universality Theorem – informally, "there is a linkage to sign your name" – for globally noncrossing linkages. In particular, we show that any polynomial curve $\varphi(x, y) = 0$ can be traced by a noncrossing linkage, settling an open problem from 2004. More generally, we show that the nontrivial regions in the plane that may be traced by a noncrossing linkage are precisely the compact semialgebraic regions. Thus, no drawing power is lost by restricting to noncrossing linkages. We prove analogous results for matchstick linkages and unit-distance linkages as well.

1998 ACM Subject Classification F.2.2 Nonnumerical Algorithms and Problems

Keywords and phrases Graph Drawing, Graph Rigidity Theory, Graph Global Rigidity, Linkages, Complexity Theory, Computational Geometry

Digital Object Identifier 10.4230/LIPIcs.SoCG.2016.3

* Partially supported by an NSF Graduate Research Fellowship.

© Zachary Abel, Erik D. Demaine, Martin L. Demaine, Sarah Eisenstat, Jayson Lynch, and Tao B. Schardl;
licensed under Creative Commons License CC-BY
32nd International Symposium on Computational Geometry (SoCG 2016).
Editors: Sándor Fekete and Anna Lubiw; Article No. 3; pp. 3:1–3:15
Leibniz International Proceedings in Informatics
LIPICS Schloss Dagstuhl – Leibniz-Zentrum für Informatik, Dagstuhl Publishing, Germany

Table 1 Summary of our results (bold) compared with old results (cited). The rows give the special types of graphs considered. The middle three columns give complexity results for the three natural decision problems about graph embedding; all completeness results are strong. The rightmost column gives the exact characterization of drawable sets.

Graph type	Realization	Rigidity	Global rigidity	Universality
General	$\exists\mathbb{R}$-complete [17]	$\forall\mathbb{R}$-complete [17]	**$\forall\mathbb{R}$-complete** (CoNP-hard [16])	Compact semi-algebraic [12]
Globally noncrossing *(no configs. cross)*	**$\exists\mathbb{R}$-complete**	**$\forall\mathbb{R}$-complete**	**$\forall\mathbb{R}$-complete**	**Compact semialgebraic**
Matchstick graph *(unit + noncrossing)*	**$\exists\mathbb{R}$-complete** (NP-hard [6])	**$\forall\mathbb{R}$-complete**	**$\forall\mathbb{R}$-complete**	**Bounded semialgebraic**
Unit edge lengths *(allowing crossings)*	$\exists\mathbb{R}$-complete [17]	**$\forall\mathbb{R}$-complete**	Open (do they even exist?)	**Compact semialgebraic**
Edge lengths in $\{1, 2\}$ *(allowing crossings)*	$\exists\mathbb{R}$-complete [17]	**$\forall\mathbb{R}$-complete**	**$\forall\mathbb{R}$-complete** (CoNP-hard [16])	**Compact semialgebraic**

1 Introduction

The rise of the steam engine in the mid-1700s led to an active study of *mechanical linkages*, typically made from rigid bars connected together at hinges. For example, steam engines need to convert the linear motion of a piston into the circular motion of a wheel, a problem solved approximately by Watt's parallel motion (1784) and exactly by Peaucellier's inversor (1864) [5, Section 3.1]. These and other linkages are featured in an 1877 book called *How to Draw a Straight Line* [10] by Alfred Bray Kempe – a barrister and amateur mathematician in London, perhaps most famous for his false "proof" of the Four-Color Theorem [11] that nonetheless introduced key ideas used in the correct proofs of today [2, 15].

Kempe's Universality Theorem

Kempe wondered far beyond drawing a straight line by turning a circular crank. In 1876, he claimed a universality result, now known as Kempe's Universality Theorem: every polynomial curve $\varphi(x, y) = 0$ can be traced by a vertex of a 2D linkage [9]. Unfortunately, his "proof" was again flawed: the linkage he constructs indeed traces the intended curve, but also traces finitely many unintended additional curves. Fortunately, his idea was spot on.

Many researchers have since solidified and/or strengthened Kempe's Universality Theorem [8, 7, 12, 1, 17]. In particular, small modifications to Kempe's gadgets lead to a working proof [1, 5, Section 3.2]. Furthermore, the regions of the plane drawable by a 2D linkage (other than the entire plane $\mathbb{R}^2$) are exactly compact semialgebraic regions[1] [12, 1]. By carefully constructing these linkages to have rational coordinates, Abbott et al. [1] showed how to reduce the problem of testing isolatedness of a point in an algebraic set to testing rigidity of a linkage. Isolatedness was proved coNP-hard [13] and then $\forall\mathbb{R}$-complete[2] [17]; thus linkage rigidity is $\forall\mathbb{R}$-complete.

[1] A compact planar region is **semialgebraic** if it can be obtained by intersecting and/or unioning finitely many basic sets defined by polynomial inequalities $p(x, y) \geq 0$.

[2] The class $\forall\mathbb{R}$ = co-$\exists\mathbb{R}$ consists of decision problems whose complement (inverting yes/no instances) belong to $\exists\mathbb{R}$. The class $\exists\mathbb{R}$ refers to the problems (Karp) reducible to the **existential theory of the reals** ($\exists x_1 : \cdots \exists x_n : \pi(x_1, \ldots, x_n)$ for a Boolean function $\pi : \mathbb{R} \to \{0, 1\}$), which is somewhere between NP and PSPACE (by [4]). The classic example of an $\exists\mathbb{R}$-complete problem is pseudoline stretchability [14].

Our results: no crossings

See Table 1 for a summary of our results in comparison to past results. Notably, all known linkage constructions for Kempe's Universality Theorem (and its various strengthenings) critically need to allow the bars to cross each other. In practice, certain crossings can be made physically possible, by placing bars in multiple parallel planes and constructing vertices as vertical pins. Without extreme care, however, bars can still be blocked by other pins, and it seems difficult to guarantee crossing avoidance for complex linkages. Beyond these practical issues, it is natural to wonder whether allowing bars to cross is necessary to achieve linkage universality. Don Shimamoto first posed this problem in April 2004, and it was highlighted as a key open problem in the first chapter of *Geometric Folding Algorithms* [5].

We solve this open problem by strengthening most of the results mentioned above to work for **globally noncrossing graphs**, that is, graphs plus edge-length constraints that alone force all configurations to be (strictly) noncrossing.[3] In particular, we prove the following universality and complexity results:

1. The planar regions drawable by globally noncrossing linkages are exactly the compact semialgebraic regions (and $\mathbb{R}^2$), settling Shimamoto's 2004 open problem.
2. Testing whether a globally noncrossing graph has any valid configurations is $\exists\mathbb{R}$-complete.
3. Testing rigidity is strongly $\forall\mathbb{R}$-complete even for globally noncrossing linkages drawn with polynomially bounded integer vertex coordinates and constant-sized integer edge lengths.
4. Testing global rigidity (uniqueness of a given embedding) is strongly $\forall\mathbb{R}$-complete even for globally noncrossing linkages drawn with polynomially bounded integer vertex coordinates and constant-sized integer edge lengths.

Our techniques are quite general and give us results for two other restricted forms of graphs as well. First, **matchstick graphs** are graphs with *unit* edge-length constraints, and where only (strictly) noncrossing configurations are considered valid. We prove the following universality and complexity results:

5. The planar regions drawable by matchstick graphs are exactly the bounded semialgebraic regions (and $\mathbb{R}^2$). Notably, unlike all other models considered, matchstick graphs enable the representation of open boundaries in addition to closed (compact) boundaries.
6. Recognizing matchstick graphs is (strongly) $\exists\mathbb{R}$-complete. This result strengthens a 25-year-old NP-hardness result [6, 3], and settles an open question of [17].
7. Testing rigidity or global rigidity of a matchstick graph is strongly $\forall\mathbb{R}$-complete.

Second, we consider restrictions on edge lengths to be either all equal (unit) or all in $\{1, 2\}$, but at the price of allowing crossing configurations. Recognizing unit-distance graphs is already known to be $\exists\mathbb{R}$-complete [17]. We prove the following additional universality and complexity results:

8. The planar regions drawable by unit-edge-length linkages are exactly the compact semialgebraic regions (and $\mathbb{R}^2$), proving a conjecture of Schaefer [17].
9. Testing rigidity of unit-edge-length linkages is strongly $\forall\mathbb{R}$-complete, proving a conjecture of Schaefer [17].
10. Testing global rigidity of linkages with edge lengths in $\{1, 2\}$ is strongly $\forall\mathbb{R}$-complete. This result strengthens a 35-year-old strong-coNP-hardness result for the same scenario

[3] Thus, the noncrossing constraint can be thought of as being "required" or not of a configuration; in either case, the configurations (even those reachable by discontinuous motions) will be noncrossing.

[16]. While it would be nice to strengthen this result to unit edge lengths, we have been unable to find even a single globally rigid equilateral linkage larger than a triangle.

We introduce several techniques to make noncrossing linkages manageable in this setting. In Section 4.1 we define *extended linkages* to allow additional joint types, in particular, requiring angles between pairs of bars to stay within specified intervals. Section 4.2 then shows how to draw a polynomial curve and obtain Kempe's Universality Theorem with these powerful linkages while avoiding crossings, by following the spirit of Kempe's original construction but with specially designed modular gadgets to guarantee no crossings between (or within) the gadgets. We simulate extended linkage with linkages that have chosen subgraphs marked as rigid. In turn, in Section 3, we simulate these "partially rigidified" linkages with the three desired linkage types: globally noncrossing, unit-distance or $\{1, 2\}$-distance, and matchstick.

2 Description of the Main Construction

The heart of this paper is a single, somewhat intricate linkage construction. In this section, we describe and discuss the properties of this construction in detail, after building up the necessary terminology.

2.1 Linkages and Graphs

Unless otherwise specified, all graphs $G = (V(G), E(G), \ell_G)$ in this text are connected, edge-weighted with positive edge lengths $\ell_G(e) > 0$, and contain no self-loops.

We use standard definitions for **abstract and configured linkages/graphs** the **configuration space** of a linkage/graph, and rigidity and global rigidity of a linkage/graph. (For concrete notation, a linkage is specified by a weighted graph G together with a choice of **pin locations** $P(w) \in \mathbb{R}^2$ for vertices w in a chosen subset $W \subset V(G)$ of **pinned vertices**.)

A configuration is called **noncrossing** if it has no edge intersections in the plane (other than common endpoints of adjacent edges); a linkage all of whose configurations are noncrossing is called **globally noncrossing**. For such a linkage, the **global minimum feature size** is defined as the infimum of the minimum feature size of the configurations.

A **combinatorial embedding** σ for a graph G consists of a cyclic ordering σ_v of v's incident edges for each vertex $v \in V(G)$, and a configuration C **agrees with** σ if v's edges are arranged counterclockwise around point $C(v)$ in order σ_v. Whenever edge (v, u) is followed by (v, w) in σ_v, the two-edge path $\Lambda = (u, v, w)$ is an **angle chain** of σ at v. (See the full paper for complete definitions.)

2.2 Constrained Linkages

We will make use of a number of special-purpose "constraints" or "annotations" that may be attached to linkages to artificially modify their behavior, such as "rigid constraints" that "rigidify" a subgraph into a chosen configuration while allowing the rest of the linkage to move freely. These annotations do not affect the linkage itself; instead, they merely indicate which configurations of the linkage they consider acceptable. The language of constraints allows us to separate a desired *effect* from the *implementation* or *construction* that enforces that effect.

▶ **Definition 2.1.** A **constraint** Con on an abstract linkage $\mathcal{L}$ is specified by a subset of the configuration space, $\mathrm{Con} \subseteq \mathrm{Conf}(\mathcal{L})$, and we say the configurations $C \in \mathrm{Con}$ **satisfy**

constraint Con. A **constrained linkage** $\mathcal{L}$ is an abstract linkage $\mathcal{L}_0$ together with a finite set K of constraints on $\mathcal{L}_0$, and the **constrained configuration space** is defined as $\mathrm{Conf}(\mathcal{L}) := \mathrm{Conf}(\mathcal{L}_0) \cap \bigcap_{\mathrm{Con} \in K} \mathrm{Con}$. In other words, constrained linkage $\mathcal{L}$ simply ignores any configurations of $\mathcal{L}_0$ that don't satisfy all of its constraints.

All terms discussed in Section 2.1 – realizability, rigidity, global rigidity, etc. – apply to equally well to constrained linkages via their *constrained* configuration space.

▶ **Definition 2.2.** A **rigid constraint** $\mathrm{RigidCon}_{\mathcal{L}}(H, C_H)$ on a linkage $\mathcal{L} = (G, W, P)$ is specified by a connected subgraph $H \subseteq G$[4] together with a configuration C_H of H. A configuration $C \in \mathrm{Conf}(\mathcal{L})$ satisfies the rigid constraint when C induces a configuration $C|_H$ on H that is congruent to the given C_H, i.e., differs only by a (possibly orientation-reversing) Euclidean transformation. When a constrained linkage $\mathcal{M}$ contains constraint $\mathrm{RigidCon}_{\mathcal{M}}(H, C_H)$, we say (H, C_H) is a **rigidified subgraph** of $\mathcal{M}$. A constrained linkage all of whose constraints are rigid constraints is called a **partially rigidified linkage**.

2.3 Drawing with Linkages and Graphs

▶ **Definition 2.3** (Linkage Trace and Drawing)**.** For a linkage $\mathcal{L}$ and a tuple $X = (v_1, \ldots, v_k)$ of distinct vertices of $\mathcal{L}$, the **trace** of X is defined as the image $\pi_X(\mathrm{Conf}(\mathcal{L})) \subset (\mathbb{R}^2)^k$, where π_X is the projection map sending $C \in \mathrm{Conf}(\mathcal{L})$ to $\pi_X(C) := (C(v_1), \ldots, C(v_k))$. A linkage $(\mathcal{L}, X)$ is said to **draw**[5] its trace, and a set $R \subseteq (\mathbb{R}^2)^k$ is **drawable (by a linkage)** if it can be expressed as the trace of some k vertices of a linkage.

We single out some drawings as particularly nice:

▶ **Definition 2.4** (Rigid Drawing)**.** Say $(\mathcal{L}, X)$ draws its trace **rigidly** if the map π_X has finite fibers, i.e., for any $p \in \pi_X(\mathrm{Conf}(\mathcal{L}))$, there are only finitely many configurations $C \in \mathrm{Conf}(\mathcal{L})$ with $\pi_X(C) = p$.

In particular, if p is isolated in $\pi_X(\mathrm{Conf}(\mathcal{L}))$, then any configuration C with $\pi_X(C) = p$ is rigid, because the discrete set $\pi_X^{-1}(p)$ contains no nonconstant continuous paths.

▶ **Definition 2.5** (Continuous Drawing)**.** Say $(\mathcal{L}, X)$ draws its trace **continuously** if the map π_X has the **path lifting property**: for any configuration $C \in \mathrm{Conf}(\mathcal{L})$ and path $\gamma : [0, 1] \to \pi_X(\mathrm{Conf}(\mathcal{L}))$ in the trace starting at $\pi_X(C)$, there is a path $\gamma' : [0, 1] \to \mathrm{Conf}(\mathcal{L})$ starting at $\gamma'(0) = C$ and lifting γ, i.e., $\gamma = \pi_X \circ \gamma'$.

In particular, if a point $p \in \pi_X(\mathrm{Conf}(\mathcal{L}))$ is *not* isolated, then any configuration C with $\pi_X(C) = p$ is *not* rigid, because a nontrivial continuous path beginning at p can be lifted to a nontrivial path beginning at C. We are especially interested in cases where $(\mathcal{L}, X)$ draws both continuously and rigidly; these concepts were introduced in [1] for their usefulness in proving computational hardness of linkage rigidity, and we rely on them for similar purposes. We make use of an even stronger notion as well:

▶ **Definition 2.6** (Perfect Drawing)**.** If the map π_X is a *homeomorphism* between $\mathrm{Conf}(\mathcal{L})$ and the trace, we say $(\mathcal{L}, X)$ draws **perfectly**.

▶ **Definition 2.7** (Linkage Simulation)**.** When $(\mathcal{L}, X)$ draws precisely the full configuration space $\mathrm{Conf}(\mathcal{M})$ of another linkage $\mathcal{M}$, we say that $(\mathcal{L}, X)$ **simulates $\mathcal{M}$**. It may **continuously, rigidly, or perfectly simulate $\mathcal{M}$** if it draws $\mathrm{Conf}(\mathcal{M})$ in this manner.

[4] Our notion of "subgraph" requires the edge-lengths of H to agree with those in G.
[5] This "drawing" need not be continuous. For example, the linkage may have a disconnected trace.

2.4 Specification of Main Theorem

For a collection $F = \{f_1, \ldots, f_s\}$ of polynomials in $\mathbb{R}[x_1, y_1, \ldots, x_m, y_m] = \mathbb{R}[\overrightarrow{xy}]$, the **algebraic set** defined by F is the set of common zeros,

$$Z(F) := \{\overrightarrow{xy} \in \mathbb{R}^{2m} \mid f_1(\overrightarrow{xy}) = \cdots = f_s(\overrightarrow{xy}) = 0\}.$$

The primary technical construction in this paper builds a globally noncrossing, partially rigidified linkage $\mathcal{L}(F)$ that draws precisely the algebraic set $Z(f_1, \ldots, f_s) \subseteq \mathbb{R}^{2m}$, or at least a bounded piece thereof, up to a translation of $\mathbb{R}^{2m}$. Why is the translation necessary? Without it, some algebraic sets would require the drawing vertices in X to collocate at some or all of the linkage's configuration space[6], precluding the possibility of global noncrossing.

We are now prepared to precisely specify the properties of this construction, from which the results listed in Table 1 follow as corollaries. We thoroughly detail these properties here, so that the corollaries may be derived solely from Theorem 2.8's statement without referring to the specifics of its proof (with one small exception, discussed in Section 4.3). This also allows for maximal reuse: the commonalities in our arguments for our three linkage contexts – unconstrained globally noncrossing linkages in Section 3.1, unit-distance linkage in Section 3.2, and matchstick linkages in Section 3.3 – have been unified and generalized into Theorem 2.8, so only features unique to each context need be discussed in Sections 3.1–3.3.

The Main Theorem is divided into three parts because it must be used in subtly different ways by the four types of results we seek. Hardness of realizability requires a polynomial-time construction of an abstract linkage that draws $Z(f_1, \ldots, f_s)$ *without knowing whether the resulting configuration space is empty*, whereas proving hardness of rigidity and global rigidity requires the polynomial-time construction of a linkage *together with a known configuration*. We thus separate these into different Parts of Theorem 2.8 with slightly different assumptions about the input polynomials f_i (Part II for realizability, Part III for rigidity and global rigidity). When proving universality, we must prove *existence* of a linkage to draw any compact semialgebraic set, but the coefficients of the polynomials defining this set may be non-rational or non-algebraic, as might the edge-lengths and coordinates of the resulting linkage, so we isolate this in Part I, away from algorithmic and efficiency concerns.

We measure the "size" of polynomials naïvely: a polynomial $f \in \mathbb{R}[x_1, y_1, \ldots, x_m, y_m]$ with total degree d is specified by $\#\text{Coeffs}(f) := \binom{2m+d}{d} = \text{poly}(m^d, d^d)$ real coefficients, using dense representation.[7] If f's coefficients are integers with maximum magnitude M, we record its size as $\text{Size}(f) := M \cdot \#\text{Coeffs}(f) = \text{poly}(m^d, d^d, M)$ unary digits (not binary!). For a set $F = \{f_1, \ldots, f_s\}$ of s polynomials in $\mathbb{R}[x_1, y_1, \ldots, x_m, y_m]$ with maximum total degree d, we set $\#\text{Coeffs}(F) := s \cdot M \cdot \binom{2m+d}{d} = \text{poly}(m^d, d^d, s)$, and if these coefficients are integers with maximum magnitude M, then $\text{Size}(F) := s \cdot M \cdot \binom{2m+d}{d} = \text{poly}(s, M, m^d, d^d)$.

▶ **Theorem 2.8.**

Part I. *Take as input a collection of polynomials $F = \{f_1, \ldots, f_s\}$, each in $\mathbb{R}[x_1, y_1, \ldots, x_m, y_m]$. Then we may construct a partially rigidified linkage $\mathcal{L} = \mathcal{L}(F)$ that draws, up to translation, a bounded portion of the algebraic set $Z(F)$: specifically, there is a translation T on $\mathbb{R}^{2m}$ and a subset X of m vertices of $\mathcal{L}$ such that*

$$T(Z(F) \cap [-1, 1]^{2m}) \subseteq \pi_X(\text{Conf}(\mathcal{L})) \subseteq T(Z(F)).$$

[6] For example, two distinct vertices that draw the trace $\{((0,0),(0,0))\} \subset (\mathbb{R}^2)^2$ must meet.

[7] The measure $\#\text{Coeffs}(f)$ does *not* count the nonzero coefficients of f; instead, it counts the total number of monomials that have total degree at most that of f.

Furthermore,

1. *Vertices X draw this trace rigidly and continuously.*
2. *The number of vertices and edges in $\mathcal{L}$ is* $\mathrm{poly}(\#\mathrm{Coeffs}(F))$.
3. *Each edge of $\mathcal{L}$ has length $\Omega(1)$, and $\mathcal{L}$ is globally noncrossing with global minimum feature size $\Omega(1)$.*
4. *For each constraint $\mathrm{RigidCon}_{\mathcal{L}}(H, C_H)$ on $\mathcal{L}$, H is a tree that connects to $G \setminus H$ precisely at leaves of H, and configuration C_H has all edges parallel to the x- or y-axes. Each edge of G is contained in at most one rigidified subgraph (H, C_H).*
5. *There is a combinatorial embedding σ of G such that every configuration $C \in \mathrm{Conf}(\mathcal{L})$ agrees with σ. Furthermore, if v is not an internal vertex of any constrained tree H, then for each angle chain Λ at v, angle $\angle C(\Lambda)$ lies strictly between $60°$ and $240°$.*
6. *Linkage $\mathcal{L}$ has precisely $|P| = 3$ pinned vertices, which belong to one of the rigidified trees (H, C_H) and are not collinear in C_H.*

Part II. *If polynomials f_i have integer coefficients, we may bound the complexity of $\mathcal{L}$ as follows:*

7. *All edge-lengths in $\mathcal{L}$ are rational, with numerators bounded by* $\mathrm{poly}(\mathrm{Size}(F))$ *and denominators bounded by $O(1)$.*
8. *Constrained linkage $\mathcal{L}$, the set X of vertices, translation T, and combinatorial embedding σ may be constructed from F deterministically in time* $\mathrm{poly}(\mathrm{Size}(F))$.

Part III. *Finally, if the polynomials f_i each satisfy $f_i(\overrightarrow{0}) = 0$, we may additionally compute an initial configuration C_0 satisfying:*

9. *All coordinates of C_0 are rational numbers with magnitude bounded by* $\mathrm{poly}(\mathrm{Size}(F))$ *and with $O(1)$ denominators.*
10. *C_0 is the* only *configuration of $\mathcal{L}$ that projects to $T(\overrightarrow{0}) \in \pi_X(\mathrm{Conf}(\mathcal{L}))$.*
11. *C_0 may also be computed deterministically in time* $\mathrm{poly}(\mathrm{Size}(F))$.

3 Using the Main Theorem: Three Linkage Models

We apply Theorem 2.8 in three separate contexts: for globally noncrossing linkages (those designed to make crossing impossible), for unit-distance or $\{1, 2\}$-distance linkages (where crossing is allowed), and for matchstick linkages (which have unit-length edges, and crossing configurations are ignored). To this end, we show that the partially rigidified linkage $\mathcal{L}(F)$ resulting from Theorem 2.8 may be simulated by each type of linkage. Primarily, this simulation is achieved by "implementing" rigidified orthogonal trees in each context: for globally noncrossing and matchstick linkages, we show that each rigid constraint in $\mathcal{L}(F)$ may be replaced by a sufficiently narrow rigid assembly. The unit-distance linkages are easier, as crossings may be ignored, so we can use standard techniques.

3.1 Globally Noncrossing Linkages

For each rigidified orthogonal tree in $\mathcal{L}(F)$ (from Theorem 2.8), we may draw a polygon P that slightly thickens the tree, and then construct a globally rigid graph G whose outer boundary is P. This graph G may be constructed with both integer coordinates and integer, $O(1)$ edge-lengths (when scaled appropriately), as illustrated in Figure 1. Replacing each tree in this way, and making sure that each tree is thickened by less than half of $\mathcal{L}(F)$'s global minimum feature size (as guaranteed by property 3), results in the desired globally noncrossing linkage simulating $\mathcal{L}(F)$.

We may now sketch proofs for hardness of realizability, hardness of rigidity and global rigidity, and universality for globally noncrossing linkages.

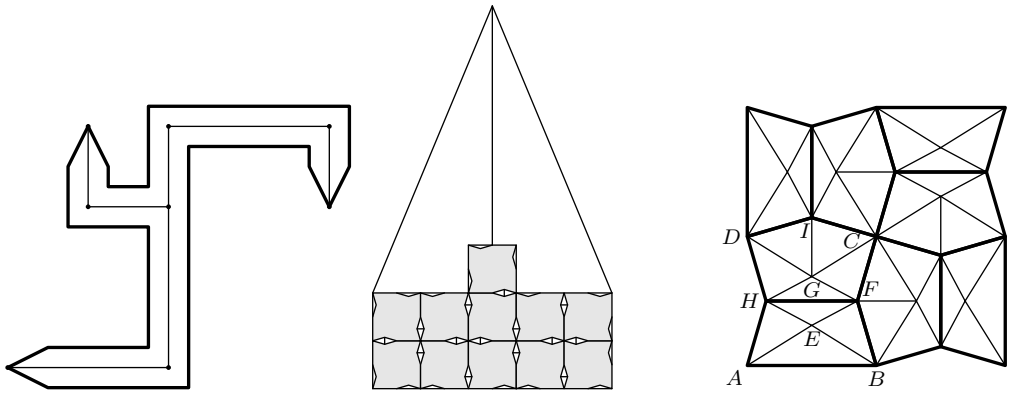

(a) The thickened outline.

(b) Graph G is built as a polyomino with extra bars at sharp corners.

(c) Each globally rigid monomino has integer coordinates *and* integer edge-lengths: $AB = 720$, $AE = 424$, $EF = 289$, $GI = 329$, and $HF = 510$. (A, E, F are not quite collinear.)

Figure 1 Each partially rigidified orthogonal tree may be simulated with a globally rigid graph G that slightly thickens the tree.

▶ **Theorem** (Hardness of Globally Noncrossing Realizability). *Deciding whether a given abstract weighted graph $\mathcal{G}$ is realizable, even when $\mathcal{G}$ is promised to be globally noncrossing and has integer edge-lengths of size $O(1)$, is strongly $\exists\mathbb{R}$-complete.*

Proof Sketch. We reduce from the CommonZero problem, which asks whether a collection of polynomials $F = \{f_1, \ldots, f_s\}$, each in $\mathbb{Z}[x_1, y_1, \ldots, x_m, y_m]$, has a common zero. This problem is $\exists\mathbb{R}$-complete, even when the polynomials have constant total degree and constant coefficients, and furthermore, all common zeroes are promised to lie in the box $[-1, 1]^{2m}$. By simulating the Main Theorem (Part II) as described above, we may construct a globally noncrossing linkage $\mathcal{M}$ that draws a translation of $Z(F)$, which means $\mathcal{M}$ is realizable exactly when $Z(F)$ is nonempty. ◀

▶ **Theorem** (Hardness of Noncrossing Rigidity and Global Rigidity). *Deciding whether a given configured weighted graph $(\mathcal{G}, C_0)$ is rigid, when $\mathcal{G}$ is promised to be globally noncrossing (so in particular, C_0 is noncrossing) and C_0 has integer coordinates and constant-sized integer edge-lengths, is strongly $\forall\mathbb{R}$-complete. It remains $\forall\mathbb{R}$-complete if "rigid" is replaced by "globally rigid".*

Proof Sketch. As in [1, 17], we reduce from the complement of the $\mathsf{H_2N}$ problem, which asks whether a given set of *homogeneous* polynomials F in $\mathbb{Z}[x_1, y_1, \ldots, x_m, y_m]$ has a nonzero common root. This problem is $\exists\mathbb{R}$-hard even when the given polynomials have constant total degree and constant coefficients. By simulating the Main Theorem (Part III) as above, we may construct a configured globally noncrossing linkage $\mathcal{L}$ that continuously and rigidly draws a neighborhood of $0 \in Z(F)$ (up to translation). Then the initial configuration of $\mathcal{L}$ is flexible if and only if 0 is not isolated in $Z(F)$, which by homogeneity happens precisely when $Z(F)$ has any nonzero point. On the other hand, if $Z(F)$ contains only 0, then by property 10 of Theorem 2.8, $\mathcal{L}$ is in fact globally rigid. ◀

▶ **Theorem** (Universality of Globally Noncrossing Linkages). *For any compact semialgebraic set $R \subset \mathbb{R}^2$, there is a globally noncrossing linkage $\mathcal{L}$ that draws R.*

Proof Sketch. The set R may be written as a coordinate projection of some compact *algebraic* set $R' = Z(F) \subset \mathbb{R}^{2m}$, so it suffices to draw a translation of R'. By scaling, we may assume $R' \subseteq [-1,1]^{2m}$. Simulating the Main Theorem (Part I) as above provides the desired globally noncrossing linkage that draws a translation of R', and hence draws R. ◀

3.2 Unit- and $\{1,2\}$-Distance Linkages

In this context, we do not use the globally noncrossing properties of the Main Construction at all. A simpler, though still careful construction is likely possible, but it does not seem that the results in this section follow straightforwardly from prior constructions, such as [1, 12, 17]. Indeed, we rely crucially on polynomially bounded integer *edge lengths*, not just coordinates. So Theorem 2.8 may be slightly overpowered for this purpose, but if all you have is a hammer...

To simulate Theorem 2.8, we begin by simulating each edge of integer length n by a **reinforced bar** graph, which is formed by adjoining $n-1$ degenerate $\{1,1,2\}$-sided triangles along their unit edges (as in [16]). For each rigidified orthogonal tree T, we construct a rigid integer grid, by combining many reinforced bars, and inserting one more reinforced bar along the hypotenuse of a 3-4-5 right triangle to preserve orthogonality. This grid stands in for tree T, connecting at the grid nodes corresponding to T's leaves. This is sufficient to prove hardness of global rigidity for $\{1,2\}$-distance graphs, as in the previous section.

Finally, as described in [17], length-2 edges may be simulated continuously and rigidly by unit-distance graphs (by combining two copies of Moser's Spindle), and so Theorem 2.8 itself may be simulated continuously and rigidly by unit-distance linkages.

Proofs of hardness proceed analogously to the arguments in Section 3.1, but restricting to unit edge lengths offers a noteworthy challenge for universality. To illustrate, the circle $C = \{(x,y) \mid x^2 + y^2 = r^2\}$ (where $r > 0$ is any uncomputable number, such as Chaitin's constant) can be drawn easily by a linkage (using an edge of length r), but simulating such an edge with a unit-distance graph is impossible. As a workaround, we instead rely on *pins* to introduce non-algebraic values. Indeed, we may slightly generalize curve C by introducing new variables (a,b) and considering the modified curve

$$C' = \{((x,y),(a,b)) \in \mathbb{R}^4 \mid x^2 + y^2 = a^2\}.$$

As C' is now defined by polynomials with *integer* coefficients, the Main Theorem (Part II) applies and may be simulated by a unit distance linkage as above. Finally, with one pin, we may fix the values $a = r$ and $b = 0$, which recovers the desired circle C. Suitably generalized, this argument can be made to work for arbitrary compact semialgebraic sets.

3.3 Matchstick Linkages

▶ **Definition 3.1** (Noncrossing Constraint)**.** We define a **noncrossing constraint**, $\mathrm{NXCon}_{\mathcal{L}}$, on a linkage $\mathcal{L}$ by declaring that $\mathrm{NXCon}_{\mathcal{L}}$ is only satisfied by noncrossing configurations; in other words, the constrained configuration space $\mathrm{Conf}(\mathcal{L}, \{\mathrm{NXCon}_{\mathcal{L}}\})$ is, by definition, $\mathrm{NXConf}(\mathcal{L})$. We refer to a constrained linkage with a noncrossing constraint (and no other constraints) as an **NX-constrained linkage**.

NX-constrained linkages may seem similar to globally noncrossing linkages, but there is an important distinction. Very few linkages are globally noncrossing – this is a stringent, intrinsic *property* that the linkage must satisfy. By contrast, *any* linkage can be annotated with an NX-constraint, which does not change the fact that crossing configurations may exist,

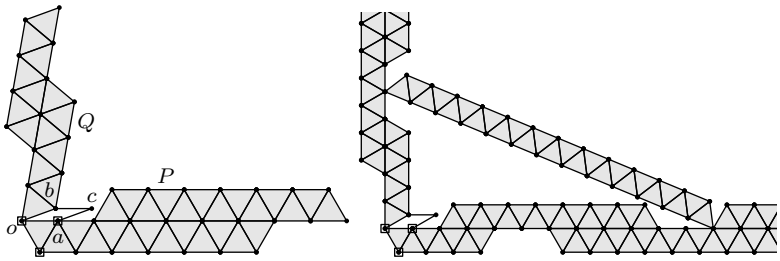

Figure 2 Left: Edge polyiamonds used to simulate edges of integer length. Right: Edge polyiamonds braced at 90°.

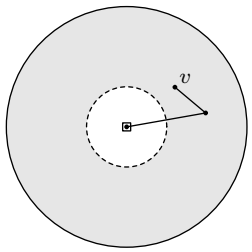

Figure 3 The trace of an NX-constrained linkage need not be closed.

but instead simply tells the observer to ignore them. For example, if $\mathcal{G}$ is the unit-distance graph with 5 edges forming two abutting equilateral triangles, then $\mathcal{G}$ is neither globally noncrossing nor globally rigid, since the triangles may be "folded" on top of each other. The *constrained* linkage $\mathcal{M} = (\mathcal{G}, \{\mathrm{NXCon}_{\mathcal{G}}\})$, on the other hand, *is* globally rigid: $\mathcal{M}$ has only one configuration, because the folded (crossing) configuration of $\mathcal{G}$ is rejected by $\mathcal{M}$'s constraint. We have not changed the structure of the linkage, only the lens through which it is viewed.

▶ **Definition 3.2** (Matchstick Linkages)**.** We define an **abstract matchstick linkage** as an NX-constrained abstract unit-distance linkage; a **configured matchstick linkage** additionally comes with a (necessarily unit-edge-length and noncrossing) configuration.

To simulate Theorem 2.8 with matchstick linkages, we first simulate the integer-length edges with **edge polyiamonds**, with **wing edges** inserted along each angle chain, as shown in Figure 2. These wing edges enforce consistent orientation of the edge polyiamonds. To rigidify orthogonal trees, we may brace selected angle chains at 90° with a 5-12-13 right triangle as shown. As in Section 3.1, these assemblies are narrow enough to avoid unplanned crossings.

Matchstick linkages (more generally, NX-constrained linkages) are unique among the three contexts because their traces are not always closed. The simple NX-constrained linkage $\mathcal{A}$ in Figure 3 draws an annulus with one open boundary, because the configurations of the underlying linkage that have v on the inner boundary are crossing and hence excluded by $\mathcal{A}$'s constraint. We prove a stronger universality result: matchstick linkages can draw every bounded semialgebraic set in $\mathbb{R}^2$. Our argument, however, involves our *proof* of Theorem 2.8, not just its statement; we discuss how in Section 4.3.

4 Extended Linkages and the Main Construction

4.1 Defining Extended Linkages

For convenience and clarity, we define and use **extended linkages**, which are constrained linkages whose constraints are tailored for the specifics of our construction. The first of these constraints, the cyclic constraint, specifies a preferred arrangement of edges around each vertex.

▶ **Definition 4.1** (Cyclic Constraint)**.** For an abstract linkage $\mathcal{L}$ with combinatorial embedding σ, a configuration C of $\mathcal{L}$ satisfies the **cyclic constraint** $\mathrm{CyclicCon}_{\mathcal{L}}(\sigma)$ if, for each vertex v with $\sigma_v = [e_1, \ldots, e_{\deg(v)}]$, segments $C(e_1), \ldots, C(e_{\deg(v)})$ intersect only at $C(v)$ and are arranged counterclockwise around $C(v)$ in this order.

▶ **Definition 4.2** (Sliceform Constraint). For a constrained abstract linkage $\mathcal{L}$ possessing a cyclic constraint $\mathrm{CyclicCon}_{\mathcal{L}}(\sigma)$, a **Sliceform Constraint**, $\mathrm{SliceCon}_{\mathcal{L}}(S)$, is specified by a subset $S \subset V(G)$ of (some or all of the) vertices of degree 4. A configuration $C \in \mathrm{Conf}(\mathcal{L})$ (necessarily satisfying $\mathrm{CyclicCon}_{\mathcal{L}}(\sigma)$) satisfies the sliceform constraint $\mathrm{SliceCon}_{\mathcal{L}}(S)$ if, for each **sliceform vertex** $v \in S$, segments $C(e_1)$ and $C(e_3)$ are collinear and $C(e_2)$ and $C(e_4)$ are collinear, where $\sigma_v = [e_1, e_2, e_3, e_4]$.

Sliceforms allow a limited form of "nonplanar" interaction while still being simulatable without crossings (c.f. Figure 5h), so they are our primary tool in circumventing the difficulties of planarity.

▶ **Definition 4.3** (Angle Constraint). If linkage $\mathcal{L}$ has a cyclic constraint $\mathrm{CyclicCon}_{\mathcal{L}}(\sigma)$, an **angle constraint**, $\mathrm{AngleCon}_{\mathcal{L}}(A, \Delta)$, is specified by an assignment of an angle $0 \le A(\Lambda) \le 2\pi$ and an angle tolerance $\Delta(\Lambda) \ge 0$ to each angle chain Λ of $\mathcal{L}$, with the condition that A assigns a total of 2π to the angle chains around each vertex.

A configuration $C \in \mathrm{Conf}(\mathcal{L})$ (necessarily satisfying $\mathrm{CyclicCon}_{\mathcal{L}}(\sigma)$) satisfies the angle constraint $\mathrm{AngleCon}_{\mathcal{L}}(A, \Delta)$ if, for each angle chain Λ, angle $\angle C(\Lambda)$ lies in the closed interval

$$[A(\Lambda) - \Delta(\Lambda), A(\Lambda) + \Delta(\Lambda)].$$

In particular, any angle chain with $\Delta(\Lambda) = 0$ is rigid: its angle in C must be exactly $A(\Lambda)$.

▶ **Definition 4.4** (Extended Linkage). An **(ε, δ)-extended linkage** where $0 < \delta < \varepsilon < \pi/4$ is defined as a constrained linkage $\mathcal{L}$ whose constraints K have the form

$$K = \{\mathrm{CyclicCon}_{\mathcal{L}}(\sigma), \mathrm{SliceCon}_{\mathcal{L}}(S), \mathrm{AngleCon}_{\mathcal{L}}(A, \Delta)\},$$

where at each angle chain Λ of $\mathcal{L}$, $A(\Lambda) \in \{90°, 180°, 270°, 360°\}$ and $\Delta(\Lambda) \in \{0, \delta, \varepsilon\}$. We will call $\mathcal{L}$ simply an **extended linkage** when ε and δ are clear from context.

4.2 Detailed Overview of Strategy

Suppose we are given a finite set F of polynomials in $\mathbb{R}[x_1, y_1, \ldots, x_m, y_m]$. In this section, we discuss how to construct an extended linkage that draws a bounded portion of the common zero set $Z(F)$, i.e., something between $Z(F) \cap [-1, 1]^{2m}$ and $Z(F)$, up to a translation. Our construction uses a transformation to polar coordinates similar to the one used in Kempe's original argument [9] and the corrected construction of Abbott et al. [1]: in place of rectangular coordinates (x_j, y_j), we use angles (α_j, β_j) related by $(x_j, y_j) = 2r \cdot \mathrm{Rect}(\alpha_j, \beta_j)$, where

$$\mathrm{Rect}(\alpha, \beta) := (\cos\alpha, \sin\alpha) + (-\sin\beta, \cos\beta) - (1, 1), \tag{1}$$

where radius $2r$ is carefully chosen. Note that $\mathrm{Rect}(0, 0) = (0, 0)$. We may write this equivalently as

$$x_j = r\left(e^{i\alpha_j} + e^{-i\alpha_j} + ie^{i\beta_j} - ie^{-i\beta_j} - 2\right) \quad y_j = r\left(-ie^{i\alpha_j} + ie^{-i\alpha_j} + e^{i\beta_j} + e^{-i\beta_j} - 2\right). \tag{2}$$

By making this latter substitution into each polynomial $f \in F$, we arrive at a representation of the form

$$f(\overrightarrow{xy}(\overrightarrow{\alpha\beta})) = f(0) + \sum_{u=0}^{3} \sum_{I \in \mathrm{Coeffs}(2m,d)} i^u \cdot d_{u,I} \cdot \left(e^{i \cdot (I \cdot \overrightarrow{\alpha\beta})} - 1\right), \tag{3}$$

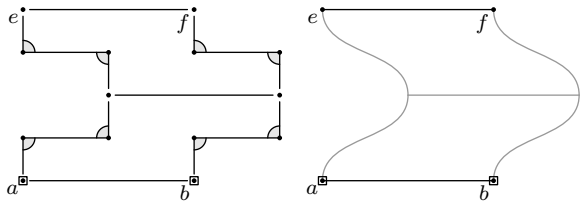

Figure 4 Left: The Parallel Gadget allows e to move freely in a neighborhood of its initial position while forcing ef to remain parallel to ab. Right: a schematic representation of the same gadget.

where $\overrightarrow{\alpha\beta} := (\alpha_1, \beta_1, \ldots, \alpha_m, \beta_m)$, each $d_{u,I}$ is a nonnegative real number, and

$$\text{Coeffs}(2m, d) := \{(a_1, \ldots, a_{2m}) \in \mathbb{Z}^{2m} \mid |a_1| + \cdots + |a_{2m}| \leq d\}.$$

Even though $f(\overrightarrow{xy}(\overrightarrow{\alpha\beta}))$ is real, this complex representation proves more useful for computations below.

We use this polar representation as a template to compute each polynomial f in the linkage. Indeed, much like in the strategies referenced above, we provide gadgets for the following tasks.

- The Start Gadget (Figure 5d) converts from rectangular position (x_j, y_j) to polar angles (α_j, β_j).
- The Angle Average Gadget (Figure 5c) allows adding and subtracting angles to construct all of the $I \cdot \overrightarrow{\alpha\beta}$ values.
- The Vector Creation Gadget (Figure 5e) and Vector Rotation Gadget (Figure 5f) compute the vectors $i^u \cdot d_{u,I} \cdot e^{i(I \cdot \overrightarrow{\alpha\beta})}$.
- The Vector Average Gadget (Figure 6) allows adding vectors to compute the values $f(\overrightarrow{xy}(\overrightarrow{\alpha\beta})) - f(0)$ for each $f \in F$.
- The End Gadget (Figure 5g) constrains these values to equal $-f(0)$.

We employ several new ideas to ensure the resulting extended linkage $\mathcal{E}(F)$ is noncrossing. First, we construct a rigid grid of large square cells (with side-length $10R$). Each gadget is isolated in one or a constant number of these cells, and information is passed between gadgets/cells only using sliceform vertices along grid edges. In this way, these modular gadgets may be analyzed individually, as there is no possibility for distinct gadgets to intersect each other. We therefore rely on the Copy Gadget (Figure 5a) to copy angles and propagate them along paths of cells to distant gadgets in the grid. The Crossover Gadget (Figure 5b) allows these paths to cross, so we are not restricted to planar communication between gadgets. These gadgets make frequent use of the Parallel Gadget in Figure 4, which (with pins removed) keeps segments parallel without otherwise restricting motion. Figure 7 shows an example of the gadgets working together.

The linkage $\mathcal{E}(F)$ is an (ε, δ)-extended linkage, where ε and δ (the angle tolerances in $\text{AngleCon}_{\mathcal{L}}(A, \Delta)$) are used in the following manner. The parameter ε constrains bar movement enough to protect against crossings and to ensure uniqueness. By contrast, δ serves (morally) as a lower bound: in each gadget we construct, we ensure that every angle chain with tolerance δ can in fact realize any offset in the entire interval $[-\delta, \delta]$ – this is how we ensure we can draw a large enough portion of $Z(F)$.

Finally, we simulate linkage $\mathcal{E}(F)$ with a partially rigidified linkage $\mathcal{L}(F)$, in two steps. First, by replacing a vicinity of each sliceform vertex in $\mathcal{E}(F)$ with the Sliceform Gadget (Figure 5h), we construct an extended linkage $\mathcal{E}'(F)$ that perfectly simulates $\mathcal{E}(F)$ but has no

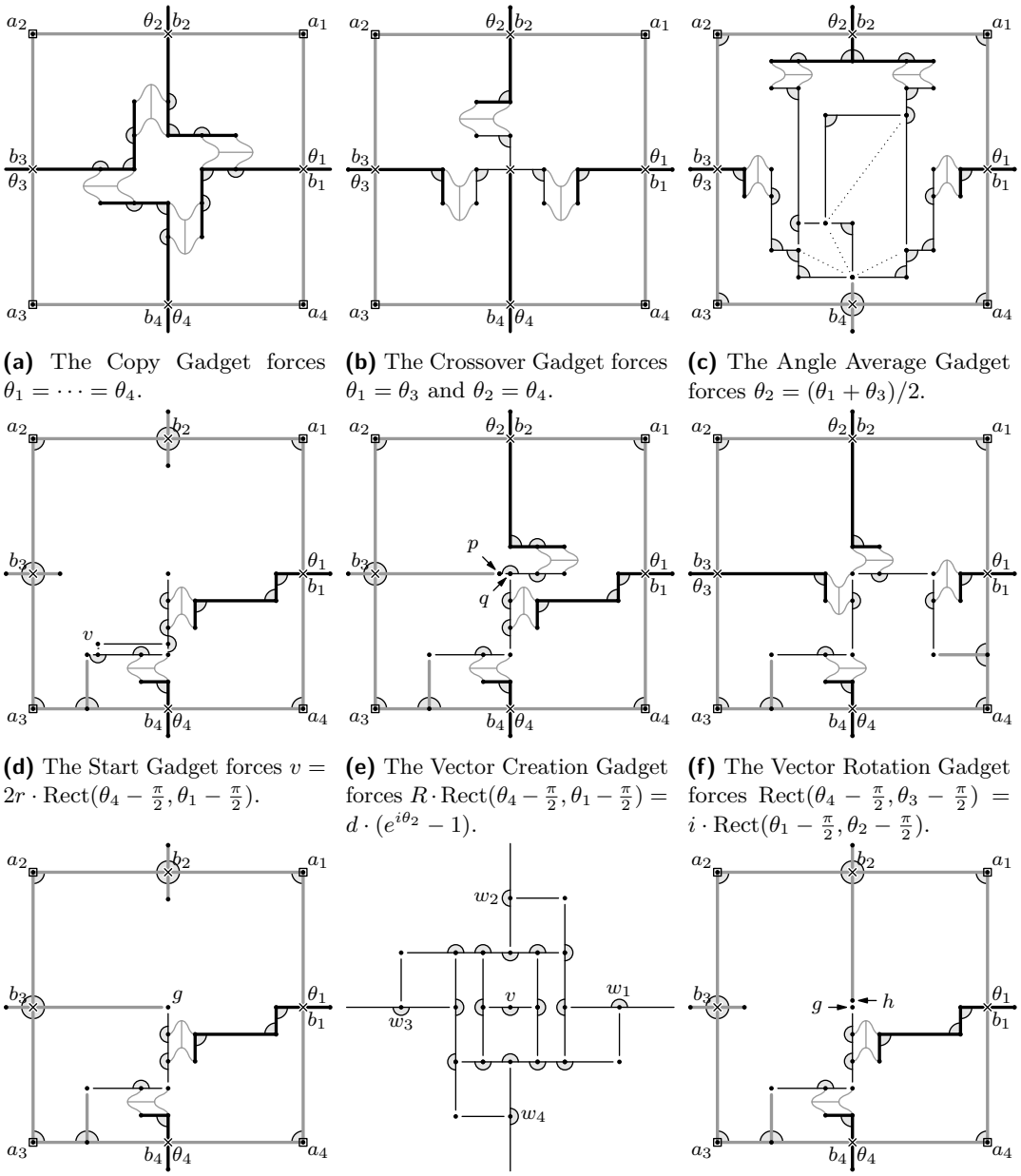

(a) The Copy Gadget forces $\theta_1 = \cdots = \theta_4$.

(b) The Crossover Gadget forces $\theta_1 = \theta_3$ and $\theta_2 = \theta_4$.

(c) The Angle Average Gadget forces $\theta_2 = (\theta_1 + \theta_3)/2$.

(d) The Start Gadget forces $v = 2r \cdot \mathrm{Rect}(\theta_4 - \frac{\pi}{2}, \theta_1 - \frac{\pi}{2})$.

(e) The Vector Creation Gadget forces $R \cdot \mathrm{Rect}(\theta_4 - \frac{\pi}{2}, \theta_1 - \frac{\pi}{2}) = d \cdot (e^{i\theta_2} - 1)$.

(f) The Vector Rotation Gadget forces $\mathrm{Rect}(\theta_4 - \frac{\pi}{2}, \theta_3 - \frac{\pi}{2}) = i \cdot \mathrm{Rect}(\theta_1 - \frac{\pi}{2}, \theta_2 - \frac{\pi}{2})$.

(g) The End Gadget forces $g = 0$, i.e., $\theta_1 = \theta_4 = \frac{\pi}{2}$.

(h) The Sliceform gadget keeps w_1, v, w_3 and w_2, v, w_4 collinear.

(i) The Crossing End Gadget creates a crossing at $g = h$ when $\theta_1 = \theta_4 = \frac{\pi}{2}$.

Figure 5 Gadgets used in the Main Construction. Angle chains Λ marked with a solid gray sector have $\Delta(\Lambda) = 0$; angle chains at midpoints of cell edges have $\Delta(\Lambda) = \delta$; and the rest have $\Delta(\Lambda) = \varepsilon$ unless otherwise specified. Vertices surrounded by squares are pinned, and those marked with an "x" are sliceform vertices. The pins shown here at the vertices a_i are for clarification only; in the overall construction, these nodes are forbidden from moving by other means, so these explicit pins are unnecessary.

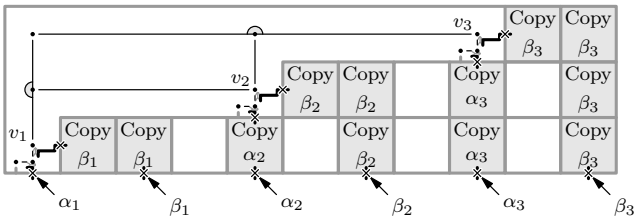

Figure 6 The Vector Average Gadget forces $v_2 = (v_1 + v_3)/2$, i.e., $\mathrm{Rect}(\alpha_2 - \frac{\pi}{2}, \beta_2 - \frac{\pi}{2}) = (\mathrm{Rect}(\alpha_1 - \frac{\pi}{2}, \beta_1 - \frac{\pi}{2}) + \mathrm{Rect}(\alpha_3 - \frac{\pi}{2}, \beta_3 - \frac{\pi}{2}))/2$.

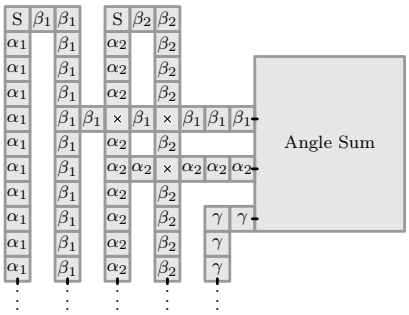

Figure 7 Computing the sum $\gamma = \beta_1 + \alpha_2$. Cells with "S" are start gadgets; those with "x" are crossover gadgets; and those with α_j, β_j, or γ are copy gadgets.

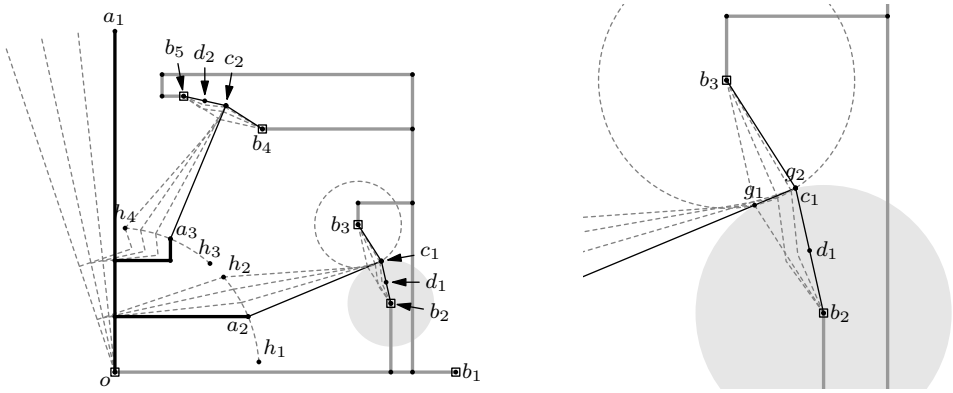

Figure 8 Angle Restrictor Gadget, $\mathcal{L}_{\angle\mathrm{restrict}}$, shown in full (left) and closeup (right).

sliceforms. Then, we replace each edge of $\mathcal{E}'(F)$ with a rigidified orthogonal tree, connected to neighboring edges with the Angle Restrictor Gadget (Figure 8), which exactly enforces the cyclic constraint and the angle constraints.

4.3 Modifications for Strong Matchstick Universality

We may subtly modify the above proof of Theorem 2.8 to prove that the nontrivial subsets of $\mathbb{R}^2$ drawn by matchstick linkages are *exactly* the bounded semialgebraic sets. We use one extra cell gadget when constructing extended linkage $\mathcal{E}(F)$, the Crossing End Gadget (Figure 5i), which is used to create a crossing precisely when $g(\overrightarrow{xy}) = 0$ for a given polynomial g. When linkage $\mathcal{E}(F)$ is simulated by a matchstick linkage $\mathcal{M}(F)$ as described in Section 3.3, all of $\mathcal{E}(F)$'s noncrossing configurations transfer to $\mathcal{M}(F)$, i.e., thickening does not introduce unintended crossings. This allows us to draw semialgebraic sets of the form

$$\{\overrightarrow{x} \in \mathbb{R}^k \in \mathbb{R}^2 \mid f_1(\overrightarrow{x}) = \cdots = f_s(\overrightarrow{x}) = 0, g_1(\overrightarrow{x}) \neq 0, \ldots, g_r(\overrightarrow{x}) \neq 0\},$$

as well as coordinate projections thereof. This is sufficient to draw any bounded semialgebraic set in the plane.

References

1. Timothy Good Abbott. Generalizations of Kempe's Universality Theorem. Master's thesis, Massachusetts Institute of Technology, June 2008. Joint work with Reid W. Barton and Erik D. Demaine. URL: http://web.mit.edu/tabbott/www/papers/mthesis.pdf.
2. Kenneth Appel and Wolfgang Haken. Every planar map is four colorable, Part I: Discharging. *Illinois Journal of Mathematics*, 21:429–490, 1977.
3. Sergio Cabello, Erik D. Demaine, and Günter Rote. Planar embeddings of graphs with specified edge lengths. *Journal of Graph Algorithms and Applications*, 11(1):259–276, 2007.
4. John Canny. Some algebraic and geometric computations in PSPACE. In *Proceedings of the 20th Annual ACM Symposium on Theory of Computing*, pages 460–469, Chicago, Illinois, May 1988. URL: http://www.acm.org/pubs/citations/proceedings/stoc/62212/p460-canny/.
5. Erik D. Demaine and Joseph O'Rourke. *Geometric Folding Algorithms: Linkages, Origami, Polyhedra*. Cambridge University Press, July 2007.
6. Peter Eades and Nicholas C. Wormald. Fixed edge-length graph drawing is NP-hard. *Discrete Applied Mathematics*, 28(2):111–134, August 1990. doi:10.1016/0166-218X(90)90110-X.
7. D. Jordan and M. Steiner. Configuration spaces of mechanical linkages. *Discrete & Computational Geometry*, 22:297–315, 1999.
8. Michael Kapovich and John J. Millson. Universality theorems for configuration spaces of planar linkages. *Topology*, 41(6):1051–1107, 2002. URL: http://arxiv.org/abs/math.AG/9803150.
9. A. B. Kempe. On a general method of describing plane curves of the nth degree by linkwork. *Proceedings of the London Mathematical Society*, 7:213–216, 1876.
10. A. B. Kempe. *How to Draw a Straight Line: A Lecture on Linkages*. Macmillan and co., London, 1877.
11. A. B. Kempe. On the geographical problem of the four colours. *American Journal of Mathematics*, 2:183–200, 1879.
12. Henry C. King. Planar linkages and algebraic sets. *Turkish Journal of Mathematics*, 23(1):33–56, 1999. URL: http://arxiv.org/abs/math.AG/9807023.
13. Pascal Koiran. The complexity of local dimensions for constructible sets. *Journal of Complexity*, 16(1):311–323, March 2000. doi:10.1006/jcom.1999.0536.
14. N. E. Mnev. The universality theorems on the classification problem of configuration varieties and convex polytopes varieties. In Oleg Viro and Anatoly Vershik, editors, *Topology and Geometry — Rohlin Seminar*, volume 1346 of *Lecture Notes in Mathematics*, pages 527–543. Springer, 1988. doi:10.1007/BFb0082792.
15. Neil Robertson, Daniel Sanders, and Paul Seymour. The four-colour theorem. *Journal of Combinatorial Theory, Series B*, 70:2–44, 1997. doi:10.1006/jctb.1997.1750.
16. James B. Saxe. Embeddability of weighted graphs in k-space is strongly NP-hard. In *Proceedings of the 17th Annual Allerton Conference on Communication, Control, and Computing*, Monticello, IL, October 1979. URL: https://www.cs.duke.edu/brd/Teaching/Bio/asmb/current/Readings3/saxe-embeddability.pdf.
17. Marcus Schaefer. Realizability of graphs and linkages. In János Pach, editor, *Thirty Essays on Geometric Graph Theory*, chapter 23. Springer, 2013. URL: http://ovid.cs.depaul.edu/documents/realizability.pdf.