# Engineering Design and Political Choice:

## the Space Shuttle 1969-1972

by

Scott Pace

B.S., Harvey Mudd College
(1980)

SUBMITTED IN PARTIAL FULFILLMENT
OF THE REQUIREMENTS OF THE
DEGREES OF

MASTER OF SCIENCE IN
AERONAUTICS AND ASTRONAUTICS

and

MASTER OF SCIENCE IN
TECHNOLOGY AND POLICY

at the

MASSACHUSETTS INSTITUTE OF TECHNOLOGY
May 1982

Signature of Author ______________________________
Department of Aeronautics and Astronautics

Certified by ______________________________
Dr. Leon Trilling
Thesis Supervisor

Accepted by ______________________________
Dr. Richard de Neufville
Chairman, Technology and Policy Program

Accepted by ______________________________
Dr. Harold Y. Wachman
Chairman, Departmental Graduate Committee
Department of Aeronautics and Astronautics

# ENGINEERING DESIGN AND POLITICAL CHOICE:
# THE SPACE SHUTTLE 1969-1972

by

Scott Pace

Submitted to the Department of
Aeronautics and Astonautics and the Technology
and Policy Program on April 30, 1982 in partial
fulfillment of the requirements for the Degrees of
Master of Science in Aeronautics and Astronautics
and Master of Science in Technology and Policy.

## ABSTRACT

The development of the American space shuttle is traced from NASA planning for post-Apollo efforts in 1969 through the award of the prime development contract to North American Rockwell in 1972. An account of the political debate preceeding the Congressional approval of the shuttle program is given; with particular attention to the debates between NASA and the OMB. The political background is provided in order to understand the political and economic forces influencing the design of the final vehicle through its technical evolution. The role of the Air Force in influencing and supporting the formation of the shuttle program is also discussed.

A series of five technical decisions relating to the design of the space shuttle are examined. They are 1) selection of the payload bay's length, diameter and carrying capacity; 2) selection of the orbiter vehicle's cross-range capability; 3) selection of the TAOS (thrust-augmented orbiter shuttle) system configuration; 4) deletion of air-breathing engine systems; and 5) the selection of aluminum as the primary structural material. These technical decisions are explained, not only in terms of their technical merits, but in terms of political and economic constraints. The first two studies show the process of institutional bargainning. The next two discuss the role of external and internal experts, respectively, to the decision-making process. The last study discusses an example of technical design optimization.

While not a complete history or case study of the shuttle program, this work shows how political choices and economic constraints drove critical aspects of the technical design. The conclusion discusses the role of 'hidden agendas', strategies for the support of large-scale R&D efforts, and how the policy-making process can influence technical designs at various levels of detail. Four design levels are identified; those of the social-political context of the new program, customer imposed requirements, contractor imposed requirements, and inherent requirements of the technological state-of-the-art. The extensive analysis and debate the shuttle program received within the government makes it a useful case for examining the role of analysis and politics in large, new technical endeavors.

Thesis Supervisor: Dr. Leon Trilling

Title: Professor of Aeronautics
and Astronautics

# Table of Contents

Chapters

Appendices

# Acknowledgments

Many people have contributed their comments and personal recollections which were incorporated into this work. For their patience, criticisms, and insights I would like to thank my advisor Leon Trilling and Gerry Steinberg. I would like to thank John Logsdon of George Washington University for his help in locating research material. NASA Historians Lee Sagesser and Ed Ezell were particularly gracious and helpful in searching through the files at NASA headquarters and the Johnson Spacecraft Center. I hope they enjoy this form I am using to return their material. I am grateful to Roe Smith and the Science, Technology and Society Program which provided crucial financial support for the research of this thesis.

Other persons making this work possible were Wallace McClure, Margret Russell, Tom Healy, Michael Yarymovych, Ed Kennedy, Chuck Gould and the rest of Rockwell International. I would also like to express my appreciation to J.A. Saavedra, Robert Seamans, John McLucas, Grant Hansen, George Rathjens, and Jerry Grey for their help with particular points in the thesis.

## Introduction

The decision to build a reusable spacecraft as part of a national Space Transportation System (STS) emerged from several years of discussion and controversy involving a broad spectrum of participants concerned with space activity and its place among other national priorities. The shuttle's evolution from an idea to a funded engineering development program serves as an instructive case study of the public policy process as well as aerospace vehicle design. Coupled with emerging technical potentials and the competition for government resources we have many examples of the process by which political bargaining expert analysis, and technical requirements combine to shape a new technological development.

This thesis examines the conceptual design process of the shuttle from the formation of the Space Task Group in 1969 by the President to examine alternative post-Apollo space efforts through the 1972 selection of North American Rockwell as the prime shuttle contractor. The focus here is on how competing shuttle designs and requirements evolved, changed, and disappeared as various institutional groups came to agreement. The evaluation of the shuttle was opened to a wide range of participants, including the Office of Management and Budget, the Office of Science and Technology, the President's Science Advisory Committee, White House staffers, the Congress, aerospace contractors, economic analysts, and the President himself. The Air Force, NASA, the scientific community, private corporations, consultants and even private interest groups and critics became involved in a complex process in which "everyone was a Shuttle designer" at some stage. As a result, the shuttle became one of the most carefully examined and most self-consciously evaluated technological undertakings in the nation's history.

The extended analysis and intense debate among many participants which preceded NASA's receiving Presidential and Congressional approval to proceed with the shuttle is almost diametrically different from the decision which led to the initiation of Apollo.[1] Made over a short period of time by the President and a small group of advisors in a crisis atmosphere, space achievement was used as a political instrument to serve the broad interests of U.S. foreign policy. Much as the Apollo decision determined the characteristics of the U.S. civilian space program through the mid-70's, so the shuttle decision shaped, and continues to shape the scope and direction of most space activities today. It is a decision worth careful examination for those concerned with the nature of U.S. space policy. The design process the shuttle underwent is an integral part of that decision and is thus of importance to those concerned with implementing U.S. space policy.

Two contrasting paradigms for an analysis of a major policy-technology decision are those of the political scientist and the systems engineer. Typifying the first might be Charles Lindbloom's _The Policy-Making Process_[2] while concise examples of the latter can be found in the design case study publications of the American Institute of Aeronautics and Astronautics (AIAA). The political scientist may consider a complex process of interacting groups shaping and being shaped by the environment which converts various political inputs of demands and supports into outputs of the political system (such as expenditures and legislation). The systems engineer might consider the same series of events and interpret them by a process of identifying requirements, generating alternatives and selecting an optimum course of action which meets the constraints of the environment. The shuttle's design was shaped by policy choices as well as technical analysis. Various aspects of the design will be examined and discussed as to the roles of policy and technology. The multiple levels of the design process, from setting overall performance criteria, establishing design specifications, to actual design implementation allows for multiple levels of design influence. Political bargaining may be prominent in one case, outside analysis critical in another, while a third case may be wholly under the control of contractor-level engineers. What determines the level and form a major design trade-off takes is a significant concern of this thesis.

Accounts of the political and technical evolution of the shuttle are presented respectively in Chapters 1 and 2. Although covering the same 1969-1972 time period, the narratives differ in their perspectives. The political evolution of the shuttle is from the viewpoint of actors in Washington, D.C. while the technical evolution is concerned with the work of the engineers responsible for designing the vehicle itself. A chronology is provided in the appendices to keep track of the multiple events taking place within these overlapping discussions. A series of five design trade-offs are examined as case studies of the types of factors that shaped the shuttle design. Each case was chosen to illustrate a different aspect of the design process while the background material is provided to understand how the overall political/technical evolution framed the debate for each design choice. In the conclusion, a matrix is formed of the various design levels versus the generic design shapers that are identified in the case studies. Each of the design trade-offs examined are placed in the matrix. The matrix provides a way of classifying design trade-offs and identifying what influences are important at different levels of the design process.

The combination of technical and policy perspectives within the same work has both advantages and drawbacks. The design of and the decision to proceed with the shuttle are bound together, offering a wealth of examples of technology and policy interactions. The complexity of the events in this period requires the tools of the political scientist, economist, and aerospace engineer; but the use of these tools doesn't make the analysis any easier. Since the emphasis of this thesis is on the shuttle's design, references to other works treating some of the political events in more detail are made. A definitive history of the shuttle program has yet to be written. This work is a contribution to that end.

## Overview of Chapters 1 and 2

The interpretation of the evolution of the political decision to proceed with the shuttle program is probably most easily done from a viewpoint of institutional bargaining. As NASA tried to formulate plans for a post-Apollo space program, it found itself without the clear mandate that it enjoyed with the lunar landing mission. Without a well-defined base of political support, NASA began a period of negotiation with other national institutions in order to both advocate its own view of what a future space program should be and gain the cooperation (or at least the acquiescence) of other political actors. Starting with very ambitious plans for an extensive program of manned spaceflight, NASA was gradually forced through a series of retrenchments which left the shuttle as the focus of its efforts for the 1970's.

If the political and technical accounts of the shuttle's development are considered as a single narrative, we can see the period preceding hardware development as dividing into three phases.

First phase: 1968-May 1970. This time was devoted to defining NASA's mission in the post-Apollo period. NASA wanted to continue lunar exploration, establish space stations in lunar and earth orbit and develop a new reusable spacecraft to lower the cost of space transportation. When the Executive Office, through the Office of Management and Budget, and the Congress proved reluctant to take on such an ambitious commitment, NASA attempted to give its plans a central focus by urging the adoption of an Apollo-like effort to culminate in a manned Mars landing. The reaction of the Congress and a significant portion of the scientific community (including the President's science advisors) was even more negative and NASA retreated. Plans for manned planetary exploration were shelved and NASA focused on the development of an earth-orbiting space station (which might be the basis for later planetary explorations) and a shuttle for logistical support. As budgetary pressures on NASA became more severe with the promise of such austerity for the next several years, NASA realized that the station could not be supported without the shuttle, but the shuttle could fly without a space station. The shuttle became the top priority for the agency as the bulk of other advanced planning efforts required some form of routine access to space. The justification for the shuttle now shifted to the support of unmanned science and applications programs and other projects needing space transport. By May 1970 the shuttle had emerged as the focus of NASA's definition for itself in the coming decade.

Second phase: June 1970-October 1971. Even with the focusing of attention on the shuttle, the pressures on NASA to reduce its budget remained. The results of the initial design contracts to the aerospace industry had produced fully reusable shuttle vehicles which relied on manned, winged boosters to carry a smaller manned vehicle to orbit. Both vehicles were to be capable of landing on conventional runways and used several hundred times. The cost for developing this kind of vehicle however, was placed at about $10 billion (1970 dollars). This was over twice as much as the OMB (Office of Management and Budget) wanted to allocate over the next several years. Under pressure from the OMB to show the cost-effectiveness of the shuttle program, NASA commissioned Mathematica, Inc. to do a study of the cost-benefit tradeoffs of a new space transportation system. Mathematica found a fully reusable system barely cost-effective; any significant cost overruns would wipe out the economic benefits.

NASA issued new contracts to the aerospace industry to examine alternative shuttle designs with a view to cutting the development costs without raising operating costs over the cost of flying conventional boosters. NASA also entered into closer cooperation with the Air Force in order to include military space traffic in the projections of demand the shuttle would service. This would help the economic justification of the shuttle program and insure DOD support in Congressional testimony. It should be noted that the Air Force played a fairly limited role in the political negotiations of the shuttle decision. The military had some influence on the shuttle design and military space traffic was a major portion of the total missions the shuttle would fly, but they did not get directly involved in the detailed political debates. The details of Air Force involvement with the early period of the shuttle program are discussed in Chapter 3.

As alternative shuttle designs became more clearly defined, Mathematica performed a second study to determine which of the alternatives might be economically preferred. During this time, NASA seemed to be still holding to its desire for a fully reusable shuttle while the OMB was advocating some form of new expendable booster instead. At the end of October 1971, Mathematica sent a preliminary report to the NASA Administrator which identified the TAOS(thrust-assisted orbiter shuttle) as the economically preferred choice of all the shuttle designs considered to date. TAOS was a design where the propellants for the shuttle engines were carried in a large external tank and strap-on boosters assisted the vehicle into orbit. The use of an external tank cut down on the size and cost of the orbiter itself while the strap-on boosters helped eliminate the need for a separate manned booster. The external tank and boosters were not then considered reusable, but the savings in development costs more than made up for the increases in operating costs. The second phase of the shuttle history thus consists of the emergence of the TAOS concept which was eventually adopted.

Third phase: Novemeber 1971-1973. The last two months of 1971 were hectic with determination of the detailed design proposals by industry for a TAOS-type vehicle. NASA was also in the process of last minute negotiation with the OMB over the size of the agency's budgetary authority to support the shuttle program. In early January of 1972, President Nixon gave the go-ahead to NASA which allowed it to release proposals of work to industry.

Four companies submitted designs and cost estimates to develop the shuttle: North American Rockwell, Lockheed, McDonnell Douglas, and Grumman. North American Rockwell was selected as the prime contractor in July 1972. Through the rest of 1972, the Rockwell design went through a series of sizing changes and modifications as final details were established. By the beginning of 1973, the shuttle design that would be built was substantially completed.

The most striking feature about the evolution of the shuttle through the period preceding hardware development is the role of conflict in shaping the final design. The intense economic pressures helped produce a substantially less expensive design and (in retrospect) at less technical risk. The need to gain political allies insured NASA cooperation with the Air Force which produced a vehicle usable to both agencies. Without a single overriding mandate such as a lunar landing, NASA was forced to make detailed projections of the kinds of space activities it intended to engage in. It was to NASA's advantage to have the shuttle supporting a broad range of activities, such as commercial, military, scientific and applications projects. Without a single purpose, the shuttle was sold to a broad range of interests as a useful and flexible tool for a diverse range of future space activities.

# The Political Evolution

"You know how we sold the shuttle? We documented it so thoroughly that the right people never took the time to see through it."
-Rockwell International engineer

By 1969 the civilian space program was entering a crucial new phase. While NASA basked in the excitement of the first lunar landing and the fulfillment of President Kennedy's goal "before this decade is out...(of) landing a man on the moon and returning him safely to Earth.", decisions regarding the goals and contents of the post-Apollo space program were coming to the front. The prevailing attitude toward post-Apollo goals in both the executive and legislative branches was one of "wait and see". The scientific community, judging from the contents of reports on post-Apollo objectives made by various science advisory bodies such as the President's Science Advisory Committee (PSAC) and the Space Science Board (SSB) of the National Academy of Sciences (NAS), was unenthusiastic toward expeditions to Mars, large space stations, lunar bases, and even some large-scale unmanned planetary exploration projects.[1] The Air Force, encouraged by a section of the Republican national platform to support U.S. military space activities, argued for a full go-ahead for establishing a Manned Orbital Laboratory (MOL), a project begun in the Johnson Administration. The aerospace industry was interested in seeing a continuation of large-scale projects but was not united as to which should have priority. Each firm had special interests in particular types of projects, depending on the company's particular capabilities. Most firms concentrated their lobbying efforts in support of military projects while paying less attention to NASA's proposals as the military provided by far the greater amount of business.

Within the Executive Office, the group formally charged with space policy was the National Aeronautics and Space Council. This committee was chaired by the Vice-President; other members included the NASA Administrator, the Secretary of Defense, the Secretary of State, and the Chairman of the Atomic Energy Comission. The Council and its small staff had, with few exceptions, always operated on the edge of space policy debates. Neither Johnson nor Humphrey, as Vice-Presidents, had used the Council as a vehicle for assuming leadership in space policy. By 1968, the Space Council was quite inactive.[2]

PSAC, on the other hand, had taken a clearly articulated position on post-Apollo programs. In early 1967, this 18-man committee released a report on The Space Program in the Post-Apollo Period which in part recommended: "...studies should be made of more economical ferrying systems, presumably involving partial or total recovery and reuse." A key term used in this report, however, was "balance". To NASA this had become a code word for proposals to shift resources from the manned to unmanned parts of the space program. PSAC recommendations came when the Johnson Administration was preoccupied with the Viet Nam war and thus had no immediate impact, although it served as a basis for PSAC's position in the 1969-1970 debates over space policy.

## The Townes Panel

Shortly after his election in 1968, Nixon appointed a task force to examine space policy issues facing the new Administration. Chaired by Charles Townes, a prominent physicist who was a member of a number of science advisory panels (including PSAC), the group presented their conclusions to the President prior to inauguration in January.* The Townes group recommended against "a commitment now to a large space station, extensive development of 'low-cost boosters', or a manned planetary expedition." It argued that "approximately the present budgetary level, comprising $4 billion annually for NASA..." was "adequate for the important programs envisaged." (The $4 billion budget figure kept reappearing throughout the next months; it was strongly opposed by NASA as too low). The task force supported a military space program at the $2 billion level and concluded that the division of space effort- even to the duplication of extensive

---

*Other members of the Townes panel were Spencer Beresford, Lewis Branscomb, Francis Clauser, Harry Hess, Norman Horowitz, Samuel Lehner, Ruben Mettler, Charles O'Deal, Allen Puckett, Walter Roberts and James Van Allen.

manned programs between NASA and DOD was appropriate.[4] The majority of the group concluded that "There is a substantial role for man" and that a "continued manned flight program... is justified at the present." The group pointed out that a decision regarding the role of man in space "may be the most critical choice facing the new Administration in regard to the space program."

## The Space Task Group

When Richard Nixon became President, the space efforts of the 1960's were reaching their climax. NASA was preparing its arguments in support of major new projects- particularly an early commitment to a large space station. NASA saw such a project as a crucial step in a transition from exploring space to routine utilization. The new President was being cautioned against such a commitment by most of his advisors within the White House due to pressures to reduce the budget and a lack of clearly desirable missions for the station. All concerned, however, were saying there was a pressing need for some decision on post-Apollo space program goals within the first year of his Administration. In a memo dated February 13, 1969 from the President to Lee DuBridge, Presidential Science Advisor and Director of the Office of Science and Technology (OST), Nixon asked for definitive statements on the future course of the U.S. space program from the DOD, NASA and the OST. He asked them to develop individual program plans and then to coordinate them into a single proposal along with specific budget recommendations for an integrated program. Recommendations were due by September 1, 1969.

Chaired by the Vice-President, the Space Task Group included the Secretary of the Air Force Robert Seamans, NASA Administrator Paine, Science Advisor DuBridge and representatives from the State Department (Undersecretary U. Alexis Johnson), the Atomic Energy Commission (Chairman Glen Seaborg) and the Bureau of the Budget (Director Robert Mayo). Input was received from members of Congress, the National Academy of Sciences, the American Institute of Aeronautics and Astronautics, private citizens, and industry.

NASA published its report to the Task Group in September of 1969. Entitled America's Next Decade in Space, the report recommended the development of a permanent manned space station and a low-cost space transportation system as key elements of the civilian space program for the next decade. The goals of the program specifically were that[5]

> The next decade (should) be devoted to building an integrated efficient, economical space capability consisting of permanent space station modules and a low unit-mission cost space transportation system that will make earth-moon space easily and economically accessible to man for his use for exploration, applications, science and technology research.

The report noted that the expense of such a program was so great that the program objectives could only be met if the total space program were planned around maximum economy measures, including such means as

> Commonality- The use of a few major systems for a wide variety of missions.
> Reusability- The use of the same system over a long period for a number of missions.
> Economy- The reduction in the number of "throw away" elements in any mission; the reduction in the number of new developments required; the development of new program principles that capitalize on such capabilities as man-tending of space facilities; and the commitment to simplification of space hardware.

Although NASA was at a peak of activity prior to the first lunar landing, the future was uncertain. There were no approved plans for manned flight programs beyond the first few lunar landing missions and a single earth orbital mission using modified Apollo hardware (the Apollo Applications Program, later to become Skylab). This meant no manned missions beyond 1972. The Agency's budget for space activities had declined from a peak of $5.2 billion in FY 1965 to the $3.6 billion budget approved by the outgoing Johnson Administration. In mid-1965, over 400,000 contractor and NASA employees had been working on the space program; by mid-1968 that number had been cut almost in half. NASA had built up a large, highly-motivated and experienced team of Agency employees, contractors and university researchers. Over $4 billion had been invested in the physical facilities to support manned space flight. Three major NASA centers, the Manned Spacecraft Center (MSC) in Houston, the Marshall Spaceflight Center (MSFC) in Huntsville and the Kennedy Space Center (KSC) in Florida were almost totally dedicated to manned flight. From the view of efficient use of these resources and their continued viability it was imperative for the NASA leadership to get fresh support for new manned initiatives.

In reviewing FY 1970 budget requests the new Administration received a memorandum from Paine which in part linked space station proposals with the general acceptance of a manned flight program.[6]

> We believe strongly that the justification for proceeding now with this major project as a national goal does not, and should not be made to depend on the specific contributions that can be foreseen today in particular scientific fields, in particular economic applications,...or in specific defense needs. Rather, the justification for the space station is that it is clearly the next major evolutionary step in man's experimentation, conquest, and use of space.

There were mixed views on an early commitment to a space station as the next major manned program. The Paine letter represented NASA attitudes and a deep commitment to manned flight. The State Department saw the station as an important asset from the viewpoint of potential international impact. The AEC lined up with NASA on the station as the next appropriate goal. The Defense Department said that it did not have or anticipate projects which would require a station as defined by NASA. The Air Force was currently engaged in a (losing) battle for its own manned program, the Manned Orbital Laboratory (MOL). The DOD as a whole was very interested in the idea of a low-cost space transportation system which NASA proposed as part of its station concept and requested that this "shuttle" system be examined as distinct from the station.[7]

The PSAC report to the STG, The Next Decade in Space was submitted in September of 1969, but was not published by PSAC until March 1970. It recommended certain elements similar to those of the NASA space program plan; emphasis on economy in space activities and applications of the benefits of space for all. However, the PSAC report did not recommend immediate commitment to manned activities. It suggested expanding automated equipment capabilities for space exploration with the option of developing capabilities for future manned space activities. The reasoning was that[8]

> ...the costs of manned spaceflight operations imposed by today's expendable booster technology do not justify the conduct by astronauts of space science or space applications activities in light of the automated alternatives and the opportunities for advantageous investment in other areas of science. The development of recoverable and reusable space transportation might, when complete, reopen the question of the cost-effective use of man in space.

The report instead recommended that NASA

> Study, with a view to early development, a reusable space transportation system with an early goal of replacing all existing launch vehicles larger than Scout with a system permitting satellite recovery and orbital assembly and ultimately radical reduction in unit cost of space transportation.

While PSAC agreed with NASA that a manned transporation sytem might be useful, it doubted the possible utility of man stationed in space. At the programmatic and budgetary level, the differences between PSAC and NASA sharpened. NASA called for a permanent space station by 1976, while PSAC thought there was no requirement for such a station before 1980. NASA wanted to prepare in the 1970's for a manned Mars expedition in the 1980's, PSAC was only willing to endorse the concept of such a mission before the year 2000. Both NASA and PSAC supported shuttle development, but NASA took the position that it would only develop the shuttle if the space station was also approved. NASA estimated the ten-year budget of the civilian space program for the 70's at $70 billion, PSAC called for a $40 billion effort. NASA wanted to continue production of the Saturn V booster in order to launch space station components, PSAC felt Saturn V production should cease by 1972.

The STG staff also had reports on post-Apollo space programs prepared by the AIAA and the Space Science Board of the National Academy of Sciences in response to requests from Science Advisor DuBridge.[9] Finally, there was the result of a joint NASA-DOD study of a Space Transportation System (STS), requested by the STG in March, when it was apparent that both agencies were interested in some kind of low-cost access to earth orbit utilizing reusable vehicles. The shuttle had emerged within NASA planning as a necessary subelement of a space station program for logistic support of a large space base. NASA was reluctant to decouple consideration of the shuttle as part of a station program, perhaps fearing what eventually took place- approval of the shuttle as a separate program and rejection of the station plans. The purpose of the STS study was to assess the practicality of a common system to meet the needs of both DOD and NASA. Despite differences in design concepts and performance requirements, the study concluded that on balance a common system could and should be developed. This study found a favorable response in the OST and PSAC Space Panel, which found that "the most important advances in space exploration seem to rest on the development of the space transportation system" and that a reusable STS would be the "most attractive major new technology development for the decade."

In an attempt to summarize staff deliberations for STG discussion, OST staffer Russell Drew sought to identify major issues on which the STG needed to take a position before its report to the President could be written. The two major issues were[10]

1.Should there be a large space station program, and should it precede the availability of a low-cost transportation system?

2.Should a reusable space transportation capability be developed and how should the program be managed?

While important, Drew saw "the key question for decision (as) ...Should the Administration propose a major new program goal in space similar to Apollo to act as a focus for U.S. efforts in the next decade...?" A positive answer to this question led directly to consideration of an undertaking even bolder than the space station and more difficult than the manned lunar expeditions- a manned Mars landing.

## The Mars Option

Spiro Agnew had no particular exposure to U.S. space efforts prior to assuming the Vice-Presidency. Within weeks, however, he became an articulate advocate of the space program. As chairman of the Space Task Group, Agnew consistently asked whether the space program should be organized around a single Apollo-like goal such as sending men to Mars. On July 16, 1969 at the Kennedy Space Center for the launch of Apollo 11, Agnew "went public". In interviews at the launch, Agnew said it was his "individual feeling that we should articulate a simple, ambitious, optimistic goal of a manned flight to Mars by the end of this century." Spurred on by Agnew's private and public support, Paine decided that NASA should move aggressively to identify an early manned Mars mission as the central focus of its future plans. He ordered NASA planners to explicitly incorporate a manned Mars mission in the 1980's into NASA's overall proposal to the STG.

There were several reasons for the Mars emphasis as the thrust of NASA plans. Earlier in the year NASA had tried to gain support for a space station program on the basis of it being the next logical step in manned flight. Neither that rationale, nor any other that NASA tried seemed to get major support from other STG members (save from the State Department, concerned with international prestige). The space station was what NASA wanted to develop during the 1970's; by picturing it as a necessary precursor to manned Mars in the 1980's, Paine hoped to provide a convincing rationale for an early commitment to the station. Not only the space station, but also the shuttle, the development of nuclear rocket engines (NERVA) and the retention of the Saturn V booster, were required if an early manned Mars landing goal was approved. Emphasis on Mars was based on a rationale for the space program that went beyond advancing technological capability and of applying that capability to provide tangible benefits. Exploration was the legitimate goal of space activity. This theme was at least in principle welcome to the scientific community; the PSAC panel itself suggested solar system exploration as a major post-Apollo goal. The sticking point, of course, was the budget. Paine suggested that the extensive program described was possible "with a budget rising to about $9 to $10 billion by the last half of the decade". He called for a commitment in principle to these achievements...<u>now</u>."[11]

The realization that an early manned Mars mission was under active examination in the Administration provoked critical reaction from Congress, the press, and the general public. In addition to traditional liberal opposition from such figures as Senate Democratic leader Mike Mansfield and Edward Kennedy, usually supportive Congressmen were also ill-disposed to major new initiatives. Clinton Anderson, Chairman of the Senate Committee on Aeronautical and Space Sciences stated on July 29 that "now is not the time to commit ourselves to the goal of a manned mission to Mars."[12] The <u>Washington Post</u> and the <u>New York Times</u> were both critical of plans for an early Mars mission. The <u>Times</u> warned that "any forced-draft Martian analogue of the Apollo project would divert hundreds of billions of dollars that are more urgently required to meet the needs of men and women on earth."[13] A nation-wide Gallup Poll just after the Apollo 11 mission found fifty-three per cent of those questioned opposed to a manned Mars mission, thirty-nine per cent favored it, eight per cent had no opinion.[14]

While backing off from commitments to a manned Mars mission for the early 1980's, the final STG report included a very ambitious range of plans in line with the President's request for a comprehensive outlining of potential program requirements. The report presented a maximum commitment program in which the only constraint was one of technology; a minimum commitment in which there would be no manned missions; and a space program falling somewhere between these extremes for which three possible variations were outlined. These latter three plans all contained activities supporting a space shuttle, a 12-man space station, a 100-man space base, and lunar orbiting and surface stations supported by space tugs. Two of the three options also included a manned Mars mission. The time frame envisioned for each of the options differed, depending on projected annual budgetary commitments and constraints. The first option would have the space station and earth-to-orbit shuttle available between 1976-78; the second and third options would have them ready between 1977-81. To carry out programs of this magnitude, the STG report projected funding levels of $6-10 billion per year, depending on the option chosen. This was clearly optimistic considering that the peak NASA budget during the Apollo years was $5.25 billion.

## Reaction to the STG Report

President Nixon was briefed on the results of the Space Task Group report on September 15, 1969. After the briefing, Press Secretary Ronald Ziegler said that the President had concurred in the STG's rejection of extreme program options such as landing a man on Mars as soon as possible or eliminating manned flight after Apollo. But Ziegler declined to predict when Nixon would make a decision on future space goals, although budgetary considerations would be a major factor.[15]

Reaction to the STG report in Congress, the press and the scientific community was mixed. While almost unanimous on the deferral of an early manned Mars landing, there was even a considerable body of feeling that even a long-range commitment to manned planetary exploration or other large-scale manned missions was unwarranted- particularly among science critics of NASA's programs.[16] In addition to science critics, liberals and fiscal conservatives again expressed opposition (for different reasons) to STG proposals for expensive manned programs such as the station, shuttle and lunar bases. On the other hand, the STG report's stressing of balanced effort in which science, applications, and international cooperation would play a large role was applauded by influential congressmen and scientists.

NASA and others had expressed hope that the President would announce his choice among the STG options quickly, perhaps by October, so that his choice could serve as a basis for

NASA's coming budget submission. This was not to be the case. Reaction to the report was apparently being carefully monitored by the White House, which took more than six months before Nixon made any formal reaction to the Group's recommendations.

On March 7, 1970 the President issued a statement defining goals for the U.S. space program.[17] Written by White House staffers under John Erlichman concerned with domestic policy, Nixon reaffirmed and distilled the goals of the Space Task Group, but indicated a stretched out time schedule, especially for the post-Apollo lunar missions and expeditions to Mars. While making it clear that the space program would not be allowed to stagnate, it had to be balanced with other national priorities. He noted "space expenditures must take their proper place...Our approach to space must continue to be bold - but it must also be balanced." As one of the specific objectives for the future Nixon stated that

> "...as we build for the longer-range future, we must devise less costly and less complicated ways of transporting payloads into space. Such a capability-designed so that it will be suitable for a wide range of scientific, defense and commercial uses- can help us realize important economies in all aspects of our space program. We are currently examining in greater detail the feasibility of reusable space shuttles as one way of achieving this objective."

The Administration recommended a NASA budget for FY 1971 that was less than the budget for FY 1970, a decrease which reflected "current fiscal constraints". Still, it was claimed that "the funding I have proposed will allow our space program to make steady and impressive progress."

## The Congressional Debates

While the Apollo progam was at its height of activity and visibility to the public, serious retrenchments in the aerospace industry were taking place. In the 2½ years beginning with 1968, the Los Angeles area lost 85,000 aerospace workers, taking with them an estimated 50,000 additional persons working in stores and service industries. Losses were due to a combination of lessening commitments to Viet Nam and the culmination of the Apollo program. By mid-1970, 93,000 persons were still claiming unemployment insurance- a 75% increase on the first half of the period and a reflection on the decreasing feed-through to other jobs. By September 1970, North American Rockwell had dismissed 21,000 of its work force, Grumman had lost 4,000 (50% of total) and the civil service had redirected 2,700 employees. By far the worst hit area was the Seattle plant of the Boeing company. In one week 64,000 workers were laid off to prevent collapse and almost three years later 15,000 persons still queued at free food kitchens moved in by local businessmen.[18] From a peak employment of 26,000 in late 1968 to 13,000 just four years later, the Kennedy Space Center was one of the hardest hit NASA centers. By mid-1970 the First National Bank at KSC had closed several thousand accounts and suffered a 75% loss rate on its loans.

Congress, caught up with Viet Nam, urban unrest, rising inflation and besieged with demands for a variety of social reforms, quickly developed a rapid negative response to proposals as costly and seemingly without tangible benefit as an extensive manned space flight program. In previous years several liberal senators such as Walter Mondale, Clifford Case, Jacob Javits, J.W. Fulbright, William Proxmire, George McGovern, Edmund Muskie, Birch Bayh and Edward Kennedy had made a practice of opposing space budgets as examples of misplaced government priorities, but with little hope of having any real impact. In 1970 this traditional opposition was made much more substantive by the Chairman of the House Subcommittee on Space Science and Applications Joseph E. Karth (D-Mn). Karth's subcommittee had not increased funding for NASA's applications program in line with the President's anti-inflation efforts. The full Committee on Science and Astronautics however, added $80 million to the Administration's request for shuttle and space station studies. Karth felt the full Committee and NASA were again slighting practical technology programs. NASA also delayed several unmanned flights and eliminated two Apollo Applications Program flights to free resources for future work on shuttle/station. Karth questioned the shuttle, claiming it constituted a pre-commitment to a manned Mars landing, at a cost of $50-100 billion. Seeing this as NASA's true objective, Karth was on record as being unalterably opposed.[19] He urged NASA to defer large-scale funding of the shuttle/space station until it had researched the technical problems and he further urged NASA to undertake cost-effectiveness studies of the shuttle.[20] For these reasons Karth proposed an amendment to eliminate funding for the shuttle and space station. He claimed this would still leave $60-80 million for the shuttle within NASA's research budget, although this was disputed by Administrator Paine. The amendment was narrowly defeated 53-53.[21]

A similar vote in the Senate was almost as close, but its long-range implications were not as serious as the opposition in the House. Senate opposition to the shuttle and space station was lead by those senators noted above who had also opposed the ABM and were preparing for the SST fight- thus by senators not generally favorable to NASA. The House debate was addressed specifically at the shape of the post-Apollo space program while the Senate debate was couched more in terms of the government's role in spending large sums of money on new technology without any direct relevance to social problems. NASA's principal opponent in the Senate was Walter Mondale (D-Mn) who, with Clifford Case (R-NJ), Jacob Javits (R-NY) and William Proxmire (D-Wis) sponsored amendments to delete shuttle and space station funds. They failed on two roll-call votes 28-32 on July 6, 1970 and 50-26 on December 7. Mondale was critical of a civilian agency like NASA planning to develop a shuttle that would have military uses as well and also felt the DOD should fund at least part of the shuttle. Space scientists were divided on their views of the shuttle. Charles Townes, now Chairman of the Space Science Board of the NAS gave strong personal support to the shuttle while James A. Van Allen, sent a letter to Mondale stating that an unmanned program was at least as valuable as and much cheaper than manned flights for scientific research.

## Shuttle and Space Station Separate

Belatedly but emphatically, NASA moved to counter the allegations of Mondale and his allies. At the FY 1972 NASA budget briefings on January 28, 1971, George Low, acting Administrator for NASA, went out of his way to deny that the agency had plans for a manned Mars mission:

> "We have in our program today no plans for a manned Mars landing. Our exploration of Mars...will over the next many years be carried out with unmanned spacecraft...I repeat, we have no plans at this time for a manned Mars landing mission."

While proposals and outlines for manned Mars missions were buried in advanced planning offices, plans for the shuttle began taking more concrete form. On December 23, 1970, NASA upgraded the organizational status of the shuttle- creating a separate shuttle office under the manned space flight administrator. Based at the Manned Space Center in Houston, it was headed by Charles J. Donlan, Deputy Associate Administrator for Manned Space Flight. The space station remained under a lower level task group. Funding requests for the station dropped from $30 million in 1970 to $15 million in 1971, while the funding request for shuttle rose from $80 million to $100 million. NASA resisted, however, the step of removing the shuttle from the manned space flight office. It was contended that the complete separation of the new space transportation system would greatly enhance the credibility of NASA's claim that the shuttle had utility for all types of space activities. NASA held that the extensive experience of the manned flight office should not be sacrificed in a drastic reorganization.[22]

The priority of the shuttle versus the space station was resolved in the summer of 1970. Julian E. Franklin, then Vice President for Space Systems and Applications at North American Rockwell explained that[23]

> "...it became very evident that there wasn't going to be enough money to develop the station and the shuttle simultaneously (and) unless you had some kind of low-cost logistical supply system, you'd eat up all of your budget just supplying the station. Economically NASA couldn't afford to delay the development of the shuttle five or six years after the station as it first thought of doing. Thus...the shuttle, which hadn't

received much attention previously, came out the top space development program for the 1970's."

The justification for the shuttle evolved as NASA's program plans changed. Originally seen as a supply vehicle for a space station which in turn would serve missions to the Moon and Mars, the shuttle was increasingly being sold as a worthwhile development on its own. The shuttle's mission was separated from any single goal and was instead touted as a utilitarian, cost-effective transportation system for placing satellites in orbit, retrieving and repairing satellites, and serving both civilian and military users. Two major factors were behind this shift in NASA's strategy. The first was the clear indication that the Administration's Office of Management and Budget (OMB) would not approve the shuttle unless it passed a rigorous cost-benefit test to prove its worth in any future space program dominated by unmanned space science and applications missions, defense missions and commercial payloads. And the second was the realistic political judgement that neither the 91st nor the 92nd Congress was willing to fund expensive new starts in manned space flight. Had Mondale and the other shuttle opponents been able to tie the project to a space station or a Mars effort, it is likely that Congress would have rejected the shuttle.

Both OMB and OST were highly skeptical of the shuttle's cost estimates from 1969 NASA feasibility studies of the shuttle. In the spring of 1970, OMB directed NASA to do an in-house cost-benefit study of the shuttle. The study was parametric and based on admittedly rough estimates in comparing several shuttle configurations with current expendable boosters and a family of "new" expendables invented for the study (by halving the costs of current boosters). The study showed a distinct advantage for the shuttle over both old and new expendables in both cost and utility justifications. The biggest savings were due not to reduced launch costs as previously assumed, but from a relaxation of the design specifications of payloads using the more benign launch environment of the shuttle. Shuttle development costs were estimated at between $6.4-9.6 billion, and operation costs between $2.7-3 million per launch with 50-100 missions per year.

Due to OMB's insistence, NASA contracted for an outside economic analysis by Mathematica, Inc. NASA had been reluctant to undertake the study as it felt that a shuttle was easily justified if a good space program with healthy traffic levels existed and feared this study would open up the question of what was a good space program. The initial contract signed was for a one-year study of the economic merits of three alternative space transportation systems: the current stable of expendables, a new group of expendables, and the space shuttle.

## Initial Technical Contracts

Detailed planning of the shuttle system began in January of 1969 when NASA awarded Phase A study contracts to four companies, General Dynamics Corp., Lockheed Aircraft Corp., North American Rockwell Corp., and McDonnell Douglas Corp. (for a description of the NASA phase planning process, see the appendix). In November 1969, after getting the results of these preliminary assessments, NASA established the fully reusable two-stage shuttle as the baseline configuration. Both vehicles had two-man crews capable of landing their vehicles on conventional runways like aircraft. They also were to have 10-year lifetimes during which they could be reused for a minimum of 100 missions. Development costs at this time were estimated at $5.2 billion. OMB thought this figure unrealistically low, and they were justified when by the spring of 1971 the fully reusable system's development cost was eventually placed at $9.9 billion due to refinements in the cost estimates.

In June of 1970, NASA awarded one-year Phase B design contracts to two teams of companies, one headed by North American Rockwell, the other by McDonnell Douglas. But in recognition of budget pressures and industry interest it extended its Phase A studies to investigate less complicated and less expensive designs than the fully reusable shuttle. These awards went to three companies, Lockheed, Grumman Aerospace Corp. and Chrysler Corp. Receiving the largest extended Phase A contract, Grumman joined with the Boeing Co. to do the work.

In a meeting of the joint Air Force/NASA Space Transportation Committee in January of 1971, the baseline design of the two-stage, fully reusable shuttle was finalized. (Discussion of the Air Force's role with shuttle is taken up in a separate section). Both the orbiter and booster stages held two-man crews with the booster carrying the orbiter piggyback up to a separation altitude of 35-40 miles. The orbiter had a delta wing configuration to provide a 1100 nautical mile cross-range capability and a 60x15 foot payload bay capable of taking 65,000 pounds into a due east orbit. As the orbiter was capable of reaching only near-earth orbits, to 600 nautical miles, a space tug to be carried by the orbiter was also necessary to place satellites in higher orbits if required. With these requirements, cost estimates were revised upwards with development costs at $10 billion and launch costs of $4 million per flight.

The most important selling point of the original configuration was its low cost per flight. However, with OMB pressing NASA on the size of the development costs, George Low, then acting Administrator of NASA, had an internal study done in the spring of 1971 to examine the effects of the shuttle's development costs ($10 billion for 1972-1978) on NASA's overall budget. Confirming the obvious, that an expanded budget was required, also brought the realization that such an enlarged budget was highly unlikely given cutbacks the Administration had already made and the close votes in Congress.

In March 1971, James Fletcher was confirmed as the new NASA Administrator (Tom Paine had resigned in September of the previous year) with Low resuming his position as Deputy Administrator. Fletcher questioned whether the shuttle design wasn't too far in advance of the state-of-the-art and he demanded further study of other configurations. He also agreed with Low's appraisal that $10 billion in development costs through 1978 wouldn't be approved After his Senate confirmation hearings, Fletcher was well aware of Congressional attitudes towards funding of advanced technological projects in light of the ABM and SST debates. He had to accept the reality of a constant annual budget of a bit over $3 billion, adjusted for inflation, for the 1970's. NASA had to reexamine the shuttle design in this harsher environment.

### The First Mathematica Report

Another driver for a reexamination of the baseline configuration was the result of the first Mathematica report, dated 31 May 1971.[24] Although referred to as a cost-benefit analysis, the study was actually a cost-effectiveness study and addressed itself to the anticipated costs and savings, not benefits, derived from the use of the shuttle. In comparing the shuttle baseline design to current and new expendables (with capability for manned flight) two approaches were used. Equal capability effectiveness assumed that some level of demand has to be met and net cost savings are computed from introducing new technology when compared to the expected outlays for the new system. Equal budget effectiveness assessed whether direct cost savings and increases in the demand for space transportation induced by the new system up to the same annual budget level justifies the expected investment over the useful life. Neither approach allowed for new capabilities provided by the shuttle- capabilities which expendables were incapable of supplying.

Using these assumptions and a conservative ten per cent discount rate suggested by OMB, the Mathematica report found the fully reusable two-stage system cost-effective if the U.S. launched 566 flights between 1978 and 1990 for an average of 44 flights a year. At that level of activity, the shuttle could incur $12.8 billion in non-recurring costs and still be cost-effective compared to expendable systems. In its directions to Mathematica, NASA had postulated the shuttle would be used 736 times from 1978 to 1990, a level of activity that would have supported $15.4 billion in non-recurring expenditures. But Mathematica judged NASA's mission model as unrealistically high. It substituted a model that assumed 600 missions during the 13-year span and found non-recurring expenditures of $12.9 billion justifiable. This meant that the shuttle would be just barely cost-effective. And Mathematica spokesmen readily admitted that inevitable cost-overruns would probably make the shuttle system uneconomic at the more plausible levels of use.

## More Congressional Debates

Representative Karth, the single most effective opponent of the shuttle and space station in 1970, warned NASA against rushing into development of a marginally justified configuration after reading the Mathematica report. He did, however, accept the concept of the shuttle as a separate project with great potential for the unmanned applications program. He and other members of the House Committee which had opposed the shuttle in 1970, supported the project in 1971.

Opposition in the Senate was better organized than in the House and again led by Mondale. The opposition was split along ideological lines rather than in terms of the relative roles of manned and unmanned operations, as was the case in the House. Part of the Senate anti-shuttle arguments included a RAND report, that had been commissioned earlier by the Air Force, which concluded that the shuttle could not be justified without a $140 billion manned space program.[25] The Air Force quickly disavowed the report as not an official or working document, stating that it did not reflect current economic conditions.[26] The RAND Corporation claimed that "a thorough reading of the report of the study will result in a general disagreement with the selective conclusions reached by Mondale." It was emphasized that the study was based on obsolete 1969 data. Mondale also argued that the shuttle's development costs had been severely underestimated, and he critizied Mathematica for relying on Aerospace Corp. and Lockheed, firms linked to the shuttle, for the report's cost, mission model, and payload data. A final, and more general criticism was of NASA's shifting emphasis on the justification for the shuttle; Mondale characterized the agency as being in search of a mission.

Since dropping discussion of manned Mars missions and using traffic models without a large space station to support, NASA had created a broad defense of the shuttle which made a focused opposition very difficult. Aside from tying shuttle's role to the support of a broad base of unmanned applications, scientific, military and commercial missions in a way that was justified as cost-effective, NASA also had a larger economic argument in the costs of the payloads themselves. Major cost savings were seen as possible in the redesign and reuse of payloads for the unique capabilities of the shuttle system. Lockheed had done an extensive payload effects study which concluded that cost savings from the design of payloads for on-orbit checkout (lessening the probabilities of on-station failure) and the more benign shuttle launch environment (lower accelerations and vibrations) were as great if not greater than the direct savings from launch operations. Finally, if one did not believe the economic arguments, there was the Air Force, who in conjunction with the RAND Corp., concluded that[27]

> "Cost arguments are not a sound basis for opposing the shuttle, just as cost arguments--despite potential savings--should not be the sole basis for supporting the shuttle...criteria other than cost should be used to evaluate the desirability of the space transportation system."

In particular, the Air Force referred to the capabilities of the shuttle design for quick reaction launches, its inspection and repair abilities with man on-orbit, and its ability to return to designated landing areas using conventional runways.

## The Air Force Position

A serious criticism of NASA's shuttle proposal was that while the Air Force's space program would benefit, the DOD was not bearing any of the development costs. In the spring of 1971, Secretary of the Air Force Robert C. Seamans testified that Air Force work on rocket engines was aiding NASA in the shuttle development, and John S. Foster, Jr., the DOD's Director of Defense Research and Engineering, testified that DOD fully supported the shuttle. The DOD saw the shuttle as potentially useful for lowering the cost of supporting its growing utilization of space and for providing new capabilities beyond conventional boosters. Seamans, however, was quoted as saying that while the shuttle would be important for national security, it was not an essential military requirement. Nor was the shuttle as immediately needed, according to DOD testimony, as the B-1 and the F-15 and thus funds could not be provided from its budget. The Air Force was already assured that if the shuttle was built its design would meet essential Air Force requirements; this being worked out through both formal and informal coordination between the Air Force and NASA. From NASA's viewpoint this was essential as the number of DOD shuttle launches was expected to average about twenty per year, assuming no "radical change in the role of military space program as we know them today."[28] The Air Force thus constituted the biggest single user of the proposed space transportation system outside NASA itself. But the admission by the Air Force that the shuttle was not important enough to receive direct funding raised questions about the cost-effectiveness of the shuttle and the importance of its DOD missions. The Air Force's passive attitude was expressed by the Assistant Secretary of the Air Force for R&D, Grant Hansen (co-chair of the USAF/NASA Joint STS Committee as well) in commenting that[29]

> "We operate our own development programs on a fly-before-buy principle. It follows that we can't permit ourselves a different point of view concerning a program managed by someone else."

The Air Force was not thinking just in terms of cost-savings, as Hansen continued

> "But even if the shuttle were to realize no direct cost reductions in our national space effort, I believe it will prove invaluable because it will let us do things that we could not otherwise do."

Shuttle proponents reiterated Seaman's and Foster's statements of support and added that while the shuttle required missions by both NASA and the Air Force in order to be economically justified, Nixon's statement of March 7, 1970 had urged development of a national space transportation system- not one designed for a single set of users. The lack of Air Force funding was in line with this and NASA's role as a civilian agency. NASA was also reluctant to get involved in the complex management of having substantial amounts of Air Force funding. NASA did not hurt its case in Congress by having several states under consideration as possible sites for military shuttle operations.

## OMB/OST versus NASA

In June 1971, amid early consideration of NASA's FY 1973 budget, the OMB made it clear that the White House would support NASA with only about $1 billion in peak funding annually for the shuttle, not the $2 billion which NASA would require with the baseline configuration over the five-year development period. Both OMB and OST were skeptical of the cost estimates and the technology required and even NASA was uneasy about the availability of needed technology. The same month NASA issued new instructions to the contractors and let out a four month extension of the Phase B contracts. The instructions were to seek ways to reduce peak annual funding requirements by exploring the use of some disposable elements and of possibly phasing in advanced technology at a later stage of the shuttle's development. The goal was to find a way to build a shuttle for about $5 billion. NASA also let out a second contract to Mathematica for an analysis of several alternative shuttle configurations. Overall however, NASA was still concentrating on the fully reusable configuration and methods to reduce its development costs.

OST was also uneasy over the cost and technology of the shuttle and with the knowledge of the OMB, organized a PSAC investigative panel. Chaired by Alexander Flax, President of the Institute for Defense Analysis (IDA), with Russell Drew of OST as the principle staff man, the panel developed a position close to that of the OST. It was favorably disposed to the idea of manned flight but not at the cost and technological risk NASA would accept. The panel's first meeting was at Woods Hole, Massachusetts in August of 1971. The group was briefed by NASA, the contractors and Mathematica. In later working meetings, OMB examiners as well as members of the OMB Evaluation Division attended as observer-participants.[30] From these meetings, various alternatives to the baseline configuration emerged, all of which were modifications to current expendables. This was in line with the basic assumption of OMB as modified by OST which did not see routine manned spaceflight as very useful. Donald

Rice, an OMB examiner, concentrated on cheaper alternatives to the shuttle while staffers in the OMB Evaluation Division under William Niskanen took a more extreme view and sought to eliminate the shuttle altogether and use some form of expendable boosters for future space traffic. Russell Drew believed it was not in the national interest to abandon manned flight due to considerations of national prestige and Soviet competition while Flax did not see an expansion or extension of the manned program due to a lack of public support. Both men approached the shuttle issue by asking what kind of space program was wanted, whereas NASA and OMB already had known positions. Drew and Flax were looking for a cheaper alternative to NASA's baseline which would continue to provide manned access to space, but not necessarily routine access.

In the search for alternatives, several possible space systems emerged. One already on the planning boards in detail was Big Gemini (Big G). The Air Force had carried this project through the development stage before canceling the MOL program it would have served. Big G was a capsule capable of lifting and returning nine men and a limited payload into space atop an expendable Titan IIIM vehicle. This fit OMB's, OST's, and PSAC's search for an alternative but not NASA's view of manned spaceflight. Dale Myers, Associate Administrator for Manned Space Flight, testified that Big G did not provide the opportunity to merge NASA's manned and unmanned programs due to the limited cargo capacity of the concept. In addition, launch costs of over $50 million per flight did not mean routine access to space.[31]

An even less advanced system, introduced to the PSAC panel by Richard Speier of the OMB Evaluation Division, was the launching of unmanned payloads fitted with a heat shield, retro rockets and a parachute for recovery. PSAC discussions found several insoluble difficulties with this, but Speier and Niskanen were irritated by NASA's quick rejection without what they felt was a proper examination. Speier also reintroduced the space glider. Reminiscent of the Dyna-Soar program, a small manned glider would be launched atop a Titan IIIL and would have the capability of returning to its base from orbit. Speier thought the glider could serve NASA's purpose as a retriever of payloads on the few occasions he felt it might be necessary and launch costs would only be about $5-16 million. If this was correct, the shuttle would show no advantage in launch costs while the anticipated payload savings alone would not have covered the reusable shuttle's development costs- even if OMB had agreed with Mathematica on the amount of payload savings. Dale Myers testified, however, that the glider's launch costs would run about $30 million per flight.[32] This ignored the Evaluation Division's view that the manned glider would seldom be used and that most payloads would be launched by the smallest and cheapest of the current expendables. NASA was looking for a productive role for man in space and for advanced technology. The space glider promised neither.

Given the extreme opposition of NASA and OMB, with neither doing much in the way of constructive listening, the interchanges did produce a change in each side's defensive positions. Once NASA realized that new expendables might be designed to capture the launch savings provided by the shuttle over current expendables, it began concentrating its arguments on the payload savings which the shuttle would yield and which would require routine manned access. OMB began shifting from opposition to a shuttle to support for the space glider during the fall of 1971. Particularly with Donald Rice and his staff, the glider's $3 billion in development costs looked good in terms of being able to reduce NASA's budget. The major difference between NASA and OMB on the type of space transportation system suited for the future revolved around the tradeoff between operational (recurring) costs and development (non-recurring) costs. The former tended to increase with decreases in the latter; the particular tradeoff depending heavily on just how many missions were projected for the shuttle's lifetime. Although NASA was more interested in keeping the fully reusable shuttle than in merely reducing launch costs, it knew that development costs had to be lowered enough while keeping per flight costs low enough to still yield savings over the use of expendable boosters. In the fall of 1971, while trying to retain the baseline vehicle, NASA granted another short Phase B extension to the contractors so that they could examine several phased development approaches. These approaches were to use less advanced technology initially, especially for the booster, and building up to the original design by the mid-1980's instead of 1978. The results were not encouraging. This Mark I/Mark II variation did have lower development costs in the initial period but also had increased operational costs and reduced operational capability which resulted in little or no overall savings.

## The Flax Memo

The result of the PSAC deliberations was a memorandum written by Flax on October 19, 1971 as an interim assessment to Edward David, the President's Science Advisor.[33] The first major point was a criticism of the Mathematica report as overly optimistic on possible cost overruns. Flax thought that from past experience cost overruns of 30-50 per cent could be expected. A shuttle system now estimated at $6.5 billion might cost $10 billion before completion. As the Mathematica report had concluded, the baseline configuration was only marginally cost-effective and cost overruns would render the shuttle uneconomic. Next, the memo claimed that the scientific community doubted that the potential benefits of the space shuttle "will be significant in relation to the large costs involved". Third, the memo noted that to justify the shuttle it was "necessary to postulate expanding rather than level space budgets for the Defense Department and NASA over the next 10 years". Adding that the shuttle could not be justified on economic grounds, it thus had to be justified on the basis of new capabilities, retention of U.S. space leadership and prestige, routine manned spaceflight if a manned program was involved, or some other noneconomic justification. The Flax memo concluded by listing the three options the panel found attractive: develop new expendables, defer the decision, or develop the space glider.

Russell Drew claimed the memo represented "a kind of a snapshot" of the panel's collective mind at that time. This was in the process of changing, particularly in regard to configurations while conceding that some of the views expressed raised questions much beyond that of configuration selection. Flax and the PSAC panel soon changed their stance from opposition to support for the shuttle. In testimony before Senator Proxmire's Appropriations Subcommittee in 1973, Flax claimed that his memo had been based on an early shuttle configuration and not the one finally selected.[34] But the $6.5 billion development cost figure used in the memo is much closer to that of the final configuration than the earlier designs. By October, the PSAC panel was no longer discussing the baseline, but examining cheaper alternatives. Flax claimed that he based his figures on the Mark I version of the baseline, using mostly current technology and disposable parts so the design would only be partly reusable. This seems reasonable as the Mark I shuttle designs did not use reusable manned boosters. Drew maintained that "most of the panel" fully supported the final shuttle configuration chosen. While PSAC was not directly involved in this final stage, the shuttle's design was settled on in the next hectic, 2½ months.

## The Emergence of TAOS

As the search for the right combination of design and economics developed, the Mathematica staff, led by Klaus Heiss, was called upon for quick analysis and advice. By the end of the summer, Mathematica had shown that even if per flight costs rose to $10 million, all but 5 per cent of the shuttle's planned missions would be cost-effective as compared to similar missions using expendables. The $9.9 billion fully reusable two stage shuttle had a per flight cost of $4.6 million. Heiss observed that "If you could go to $10 million, then some kind of thrust-assisted orbiter shuttle beat out all other systems. It had the lowest development costs of any system capable of continuous manned flight." Thrust-assisted orbiter shuttle or TAOS configurations did not use a reusable manned booster but used different combinations of liquid and solid propellant rockets to assist the orbiter into space. TAOS configurations had non-recurring costs of about $6.5 billion with launch costs of about $9 million per flight. Based on the equal capability approach and a 10 per cent discount rate, TAOS would break even at between 300 to 360 flights in the 1979-1990 period compared to 566 flights during the 1978-1990 period for the baseline configuration. The lesser non-recurring costs of TAOS also met OMB's insistence that peak funding requirements be limited to about $1 billion. The design also met the bulk of the Air Force and NASA's requirements. Consisting of a reusable orbiter, an external propellant tank and recoverable strap-on rocket boosters, the design had a 60x15 foot payload bay, a payload capability of 65,000 pounds into a due east orbit or 40,000 pounds into a polar orbit and a returning cross-range of about 1100 nautical miles. (For more on the technical characteristics, see the following chapter).

For some months NASA officials resisted the TAOS configuration in favor of phased approaches that would produce two-stage flyback systems of some sort. There was the urge to go for the most advanced design technically possible and a base of inertia in favor of a fully reusable system within the NASA planning apparatus. And as Heiss recounted

> "When we pressed the TAOS, for a long time some people over there kept seriously telling us- 'We can't go that route, because we've got to have something for the Marshall Space Center as well as something for the Houston Space Center.'"

Marshall Space Center was slated to handle the booster while the Manned Spacecraft Center was to have responsibility for orbiter development and overall systems integration. As late as October 27, 1971, NASA failed to include the TAOS configuration in briefings to the USAF/NASA Space Transportation Committee. Meanwhile, the OST and OMB were going off on their own design tangents and as Heiss continued

> "...everybody in Washington was designing a shuttle. There seemed to be a hundred pet ideas about the design, and for awhile, nobody listened to anyone else."

> "At the end of October, we thought the whole program was on a catastrophic course. There were still many people in NASA who believed they could sell the Administration an $8 billion to $10 billion two-stage flyback system. At the other end of the spectrum, the OST and OMB seemed to be drawing back toward some kind of advanced expendable system...We decided to try to get to Fletcher before the major November design review."

In a letter dated October 28, 1971 Klaus Heiss, with his superior at Mathematica, Oskar Morgenstern, sent the NASA Administrator a strongly-worded memo detailing some of the conclusions Mathematica had reached in its second NASA contract to date on the shuttle. While an interim assessment, it was made clear that these conclusions would not change substantially with the publication of the final report in January. The leading two conclusions were[35]

> 1) A reusable space transportation system is economically feasible, assuming that the level of unmanned U.S. space activity will not be less than it has been on the average for the last eight years.
>
> 2) Among the many space shuttle configurations so far investigated, and which are deemed to be technically feasible, a thrust assisted orbiter shuttle (TAOS) with external hydrogen/oxygen tanks emerges at present as the economically preferred choice. Examples of such concepts are RATO of McDonnel-Douglas and TAHO of Grumman-Boeing.

The major justifications for TAOS listed in the letter were: lower development costs, less than $6 billion; lower development risks; equal capability with the originally proposed orbiter in payload bay size and carrying capacity; elimination of the need for an immediate decision on a reusable booster; opportunity to fund early development of a space tug, which was necessary to achieve full cost benefits; and finally "TAOS assures NASA an early program definition and a purpose to the agency." The letter also contained an implied warning, that appears in each of Mathematica's reports to NASA, in asking the "key question" of "Does there exist a precise and detailed NASA and national space program for the 1980's?"

While it seems that Mathematica's "key question", like OST's, was never fully answered, the importance of the October 28 letter probably lies in that NASA found in it a way out of the recurring versus non-recurring costs dilemma. The TAOS option provided the same space operations capabilities as the original design, lowered the development costs to the $5-6 billion range, and kept operational costs low enough so that the shuttle could still replace all but the smallest expendables. It is likely that when the OMB began pressing for simpler designs, either a space glider or a smaller orbiter, the Mathematica findings constituted a significant counter argument.

## The Final Decisions

December 1971 had come to be a deadline, which was rapidly approaching, for a decision on the shuttle. All the studies and Phase B contracts with their extensions were winding up. NASA was worried about the effects of a stretch-out, both the costs and the psychological effects, on the aerospace teams working on the designs. In addition, the results of the intra-Executive Branch negotiations on the FY 1973 budget were due to be printed and sent to Congress in January. For the President, 1972 was clearly the year for the announcement of a full-scale development if there was to be one. The continuing depression in the aerospace industry and the relatively high unemployment rate among the national pool of scientists and engineers were becoming Presidential election issues. John D. Erlichman, executive director of the Domestic Council staff had cited the situation of the aerospace industry as an area of "deep concern" in several interviews with the press. While Nixon personally believed the U.S. should retain its leadership in space, he did not become involved in the debate until the end of the budget review in late December of 1971. His aides were aware of his attitudes and the emphasis he had place on reducing the cost of space operations from his March 7, 1970 message on space.

Sometime in early November, Donald Rice's group at OMB stopped advocating alternatives to the shuttle and began efforts to trim the cost of TAOS. Rather than join Rice's efforts, the Evaluation Division felt such cuts would be relatively small and not worth the effort required. NASA had already been forced from a $12.8 billion project to $6.5 billion. This was in line with the Evaluation Division's general policy orientation while the examiners tended to take a more detailed programmatic approach. Rice's switch from pushing the space glider to trimming TAOS might also have been due to the realization that the White House would probably approve some form of the shuttle project due both to NASA arguments and the need to do something for the aerospace industry in an election year. Thus it would be more fruitful to try and get the least expensive TAOS design possible.

OMB's efforts to trim costs were aimed at the size of the orbiter and the choice of solid rocket motors or liquid pressure-fed boosters. With some sources in industry, possibly including members of the Aerospace Corp., and some members from PSAC, Rice was persuaded that a "much smaller payload specification might be appropriate". The baseline orbiter was designed for a 15x60 foot payload bay with a 65,000 pound capability into a due east orbit. As NASA had pretty much abandoned hopes for a fully reusable shuttle, the baseline design had become this full-size orbiter with an external propellant tank and four different booster concepts under consideration by late November. Only one of the four options included a manned booster crew and that was based on a modified Saturn rocket. Two options included the recovery of unmanned boosters, one based on a modified Saturn vehicle while the other used strap-on liquid boosters burning in parallel with the orbiter's main engines. The fourth design used expendable solid parallel-burn boosters. Both parallel-burn designs were forms of the TAOS configuration. To force NASA to consider smaller alternative shuttles and hopefully lower development costs, OMB kept identifying specific designs to be evaluated through December. NASA resisted these attempts as a less than full-size orbiter would cut substantially into the number of missions the shuttle could handle, particularly DOD missions. NASA already had an understanding with the Air Force as to the payload bay size and weight capability both agencies felt would be an optimum, although the OMB appeared unaware (or unconcerned) with that understanding. (For details on this aspect of the shuttle debate, see the chapter on Payload Size and Weight Capability). In addition, it also appeared that the savings in development costs gained by downsizing were not very substantial, less than $100 million.[36]

As for the choice of booster engine, the October 28 Mathematica letter stated that the use of solid or liquid fueled boosters did not affect the cost-effectiveness of TAOS. There were significant differences in the development costs, however. OMB and OST (through Rice and Drew) were concerned that NASA would opt for the more expensive liquid booster technology due to the agency's extensive experience with them through Von Braun's team at Marshall. Liquid boosters seemed more suited to recovery and reuse, while little such experience was available with solid rockets. The Air Force, however, had done much development on solid boosters for its Titan launch vehicle family. This meant that furthur development work for the shuttle would be less expensive than starting from scratch. This issue was set aside till spring as a decision on TAOS wouldn't wait.

Increasing White House staff interest in TAOS and the approaching deadline caused Rice to intensify his questioning in mid-December. He began getting into the details of the design and the technology for the shuttle. Both Rice and Drew had contacts within the contractors studying the shuttle and NASA was confronted with increasingly specific suggestions for design alternatives. Not only did NASA feel that many of the questions were not firmly based, but after all the exacting review that had already occured, NASA felt that Rice was overstepping the bounds of budgetary review and should defer to NASA's technical expertise. Administrator Fletcher appealed to Caspar Weinberger, Deputy Director of OMB, and George Schultz, OMB Director, and refused in the end to deal with Rice directly. Niskanen maintained that the technical path Rice chose led him inevitably "to get clobbered at the end with a massive attack of technical briefmanship from NASA."[37]

The key figures in the final budget review were Weinberger and Schultz. Although cost-conscious, Weinberger was favorably disposed to the manned space program, stating in interviews that[38,39]

> "Just as we do with basic scientific research, there are some things about the shuttle we have to take on faith. For instance, as to what exactly it is the shuttle will be taking up and back to orbit, I must say I don't know. But I start with the presumption that the nation has a future in space, and that being the case we'll need the shuttle."
>
> "(I) never had any doubt in my mind that...I wanted to do it, because I thought it was a proper thing for the government to do at the time, and that we needed some forward-looking new activities."

Other principals at White House meetings with Fletcher and Low were Edward David and Peter Flanigan, the White House policy-level staffer concerned with space and directly under John Ehrlichman. The decision that emerged from these meetings, subject to the President's approval, was to go ahead with TAOS. This design had been found to be cost-effective compared to current or new expendables; it would ease manned access to space, it was favored by the Air Force for meeting national security mission needs; and it would continue to give the U.S. space program high visibility for international prestige. The shuttle would provide a substitute for the failure of William Magruder's New Technological Opportunities Program (NTOP) to turn up an acceptable large-scale technology program that was not space or military-related.[40] The project would also show the Administration was acting to alleviate unemployment in the depressed aerospace industry in an election year. Aides knew of Nixon's basically favorable attitude toward space, and with the diminished development costs and reduced technical risks provided by the TAOS design they knew they would have to have very strong arguments to oppose some version of this design. Any skepticism of the shuttle project was not sufficient to generate such arguments.

The President himself did not participate in the shuttle debate between the time of his March 7 message and the final decision. He allowed the adversary process between NASA/OMB/OST and PSAC to determine the final shape of the program. On January 3, Fletcher and Low met with Flanigan, Schultz, Weinberger and David at the White House. They were informed that the President and Ehrlichman had decided to approve the shuttle and that if NASA believed that the full-size orbiter was the best approach, then that is what should be developed. On January 5, 1972 Nixon announced his decision to develop the shuttle as TAOS. The shuttle was cited as a means of achieving a working presence in space, of eliminating the boundaries between the manned and unmanned space programs, of reducing the costs of operating in space, and of creating jobs while maintaining U.S. technical excellence.

## Supplementary Issues

Still unresolved was the choice of boosters for TAOS and OMB continued a small rearguard action on the size of the orbiter. Rice anticipated cost savings from the reduced weight of an orbiter with a 14x45 foot payload bay and an easing of the requirements for extending solid rocket booster technology. In January, OMB and NASA agreed that OMB would allow NASA to investigate the remaining technical decisions without further interference, in return for which NASA would inform OMB of its results before making final choices. As part of this, Rice and his staff submitted a list of about ten questions, concentrating on the booster and orbiter size, but also covering environmental effects, waterborne rocket recovery, and operational costs. NASA answered these questions at a meeting in March 1972. NASA again won the issue of orbiter size. A more detailed review than the December analysis was carried out, particularly the aspect of avoiding mission losses. NASA's conclusion remained the same, little savings and significant loss of missions due to downsizing the payload bay size and capability. OMB accepted NASA's answer, possibly due to the lack of sufficient staff to refute it. OMB Director Schultz's willingness to back-up Weinberger and accept the full-size orbiter also left Rice without higher level support.

The other outstanding questions were also resolved without serious contention. NASA's review found existing solid rocket technology to mean reduced development costs compared to the new technology requirements for pressure-fed liquid boosters. Liquids promised lower operational costs and were supposedly capable of three times as many reuses as solid boosters. Partially offsetting the solids disadvantage in reusability was the possibility of losing the liquid booster during water recovery. With their higher purchase cost, such a loss would be a more serious economic threat than the loss of a solid. Mathematica had concluded that solids need not be reusable for TAOS to be justified. With their lower reuse rate, the production volume of solids would mean greater economies of scale than liquids. NASA bowed to OMB and chose solids, which provided the same capabilities, but at a lesser technical risk. This resulted in a lessening of development costs by about $700 million. TAOS non-recurring costs eased from $5.5 billion to $5.15 billion. Still unresolved was the design of the space tug, capable of taking payloads from the low earth orbits attainable by the shuttle to higher or escape orbits. Interim 'tugs' using modifications of expendable upper stage boosters are currently planned, with the question of a permanent tug's characteristics still deferred.It is interesting to note that the tug, so crucial to the shuttle's economic justification in the number of missions it would handle, was virtually ignored by the policy-making apparatus. Possibly both NASA and the other government agencies considered it a relatively minor problem that did not require much analysis.

The second Mathematica report was releashed January 31, 1972. The conclusions were pretty much those of the October 28 letter to Fletcher. Again based on the equal capability approach with a ten per cent discount rate, the allowable non-recurring costs versus recurring costs were used to derive economic justifications for the shuttle within the OMB's budget constraints. In other words, the shuttle configuration that reduced non-recurring costs while retaining sufficiently low operating costs to replace most of the current expendable boosters became the economically preferred choice. The report complained about the uncertainty of proposed military missions and its traffic model for the shuttle excluded about 100 missions the DOD thought suited to the shuttle stating[41]

> "...the excessive secrecy of military missions is a complicating factor of the first order. It is not easy to determine whether these missions could also be carried out by other methods, whether they are needed at all, or whether these activities should be increased substantially."

The report's major conclusion nonetheless was that

> "...at 514 flights in the 1979-1990 period, the estimated benefits of a Space Shuttle System are $10.2 billion in 1970 dollars...expressed in allowable nonrecurring costs (cost savings). The economic 'break even' point is reached at an annual space activity of about 30 Space Shuttle flights, carrying satellite payloads."

With the non-recurring costs of TAOS at about $7.5 billion, this shuttle design was justifiable assuming "a level of space activity equal to the average of the United States unmanned program of the last eight years." The $7.5 billion figure included the development of the space tug, ground facilities and the shuttle vehicle itself.

As in 1971, shuttle funding found easy passage in the House. Karth supported TAOS as its costs and technological risks were substantially reduced from those of the original design. Anti-shuttle arguments of House liberals centered on the probability of cost overruns, that TAOS represented commitment to a space station, and that NASA's budget should be reduced to meet social needs. Also cited was the lack of DOD funding for a project that had military uses. None of these arguments, however, could gather non-liberal supporters. John Anderson (R-Ill) pointed out that the overriding question was again what kind of a space program was wanted, but as in 1971, this view was lost in the liberal versus conservative division of the debate. One anti-shuttle amendment was defeated 103-11 and another on a voice vote.[42]

The Senate opposition was more intense, but no more successful. An anti-shuttle amendment introduced by Mondale only had Javits and Proxmire as co-sponsors, with Case supporting TAOS. The arguments centered on possible cost overruns and commitments to a space station. NASA was accused of not facing the issue of what the U.S. wanted to achieve in space, being an agency in search of a mission. A final anti-shuttle argument was an economic analysis of the shuttle requested by Mondale from the General Accounting Office. Requested in February of 1972, the report appeared in early June. It concluded that TAOS was economically justified if development cost overruns could be kept to no more than about 20 per cent, but cited a June 1971 RAND study which found cost overruns in typical technology projects averaged about 40 per cent.[43] Mathematica claimed the threat of cost overruns was minimal assuming the design was not changed to include new technologies once the development was underway, as tended to happen in many military programs. The RAND report cited by GAO attributed about half of the average 40 per cent overrun to such changes. The Senate amendment to eliminate shuttle funding was defeated 62-21.[44]

In press announcements of the January 5 go-ahead for shuttle development, the job-creating aspects were emphasized. At its peak, the shuttle was expected to employ some 50,000 workers, with a large portion of those jobs in Southern California.[45] Trade journals praised Nixon's decision to proceed with the shuttle program and were quick to draw conclusions on the preferred candidate for 1972. As Aviation Week and Space Technology editorialized[46]

> "It should not be difficult for anybody remotely involved in the aerospace industry to make a presidential choice. Indeed, for an aerospace worker to vote for Sen. McGovern would be to vote for self-destruction.
>
> In a nation where the economy is still queasy and the spectre of unemployment still stalks many areas, a decision such as the space shuttle contract is more eloquent than any campaign speech."

The shuttle debate had come down to a liberals versus conservatives argument with the majority of Congressmen feeling that TAOS would fulfill a meaningful role in the national space program without ever really examining the specifics of that role. Shuttle opponents, with often no more analysis than proponents, tended to agree with the report of the Federation of American Scientists- which stated the problem directly as[47]

> "The true case for the shuttle, if there is one, is in manned flight (or in military programs). To play down these aspects of the shuttle, as has been done, and to attempt to sell it as a cost-effective instrument for a civil program to

to be dominated by unmanned missions involving only modest levels of public expenditures is to mislead."

Both DOD and NASA felt the shuttle's greatest value lay in its new capabilities, but the framing of the debate had led to the necessity of economic justifications. With discussion of manned spaceflight such a political liability both in the Congress and in the press, NASA's justification for the shuttle led them to rely on the unmanned applications programs and military missions. Even though such missions would not necessarily be the first ones NASA would have liked to concentrate on.

With Congressional deference to the traditional committees handling space appropriations and Executive opponents muted by the President's approval of TAOS, NASA let out the contracts for shuttle development in July 1972. North American Rockwell had been chosen as the prime contractor over Grumman Aerospace Corp., McDonnell Douglas, and Lockheed. The following chapter deals with the technical evolution of the shuttle's design from 1969 through the end of 1972.

## Introduction

1. Logsdon, John M. *The Decision to Go to the Moon*, 1970
2. Lindloom, Charles *The Policy-Making Process, 2d Ed.*, 1980

## The Political Evolution

1. National Academy of Sciences-National Research Council, Space Science Board. *Planetary Exploration 1968-75* (Washington, D.C.: National Research Council, 1968) President's Science Advisory Committee, *The Space Program in the Post-Apollo Period* (Washington, D.C.: PSAC, 1967)
2. Logsdon, John M. *The Space Program During the 1970's: An Analysis of Policy-Making*, 1974 Unpublished Draft, p.2
3. President's Science Advisory Committee, *The Space Program in the Post-Apollo Period*, February 1967, p.36
4. *Report of the Task Force on Space*, unpublished, 8 January 1969
5. NASA, *America's Next Decade in Space, A Report for the Space Task Group*, September 1969, p.45
6. Memorandum from Thomas Paine to the President, "Problems and Opportunities in Manned Space Flight", 26 February 1969
7. Logsdon, op cit, p.15
8. PSAC, *The Next Decade in Space, Report of the Space Science and Technology Panel*, March 1970, p.3
9. "The Post-Apollo Space Program: An AIAA View", *Astronautics & Aeronautics*, July 1969, p.39-46; The SSB report was contained in a letter from Board Chairman Harry Hess to Lee DuBridge, 23 June 1969
10. PSAC, op cit, p.37, 50
11. NASA, "A Program of Space Exploration in the 1970's and 1980's" presented to the Space Task Group, 4 August 1969 Part I, p.1
12. *Congressional Record*, 29 July 1969, p.58739
13. *New York Times*, editorial, 18 July 1969
14. *Congressional Record*, 13 August 1969, p.H7361
15. *New York Times*, 16 September 1969, p.1
16. Levine, Arthur L. The Future of the U.S. Space Program, 1975, p.127

17. Conressional Quarterly, 13 March 1970, p.768-769

18. "Financial Setbacks in the U.S. Space Programme", Spaceflight, August 1973, p.306

19. Congressional Record, 23 April 1970, Vol. 116, p.12873

20. Speech by the Hon. Joseph E. Karth, before the National Space Club, National Press Club, Washington, D.C., 12 November 1969

21. Congressional Record, Representatives Vote List, Vol. 116, parts 9-10, p.12869

22. Barfield, Claude National Journal, 13 March 1972, p.541

23. Barfield, Claude National Journal, 12 August 1972, p.1291

24. Mathematica Inc., Economic Analysis of New Space Transportation Systems, 2 vols., 31 May 1971

25. Congressional Record, 28 June 1971, Vol. 117, p.510085-510095, RAND Corp., "The Space Shuttle as an Element in the National Space Program" by D.J. Dreyfus, R.D. Shaver, W.D. Gosch, G.S. Levenson (RM-6244-1-PR) October 1970

26. Space Business Daily, 28 May 1971, p.151

27. Ibid, p.153

28. Ulsamer, Edgar "How Vulnerable are USAF Military Space Systems?", Air Force, June 1972, p.37

29. Ibid

30. A detailed account of the OMB/OST/NASA debates can be found in a master's thesis by Gary Gareat, George Washington University Department of Political Science 1975, p.44-58

31. U.S. Congress, House, Committee on Science & Astronautics, Space Shuttle-Skylab: Manned Spaceflight in the 1970's, January 1972, p.29

32. Ibid, p.32

33. Barfield, Claude "NASA Broadens Defense of the Space Shuttle", National Journal, 19 August 1972, p.1295-1298

34. U.S. Congress, Senate, Committee on Appropriations, Hearings before the Subcommittee on Department of HUD, et al, 93d Congress, 1st session, 1973, p.1015-1033

35. Heiss, Klaus and Morgenstern, Oskar *Factors for a Decision on a New Reusable Space Transportation System*, 28 October 1971, memorandum to NASA Administrator Fletcher

36. Letter to Caspar Weinberger from James Fletcher, 3 January 1972

37. Barfield, Claude "Intense Debate Surrounds Shuttle", *National Journal*, 12 August 1972, p.1297

38. Ibid, p.1296

39. Logsdon, John M. "The Space Shuttle Decision: Technology and Political Choice", *Journal of Contemporary Business*, Vol. 7, No. 3, 1978, p.23

40. Barfield, Claude "Science Report", *National Journal*, 6 May 1972, p.756

41. Mathematica Inc., *Economic Analysis of the Space Shuttle System*, 3 vols. and an executive summary, 31 January 1972

42. *Congressional Record*, 20 April 1972, Vol. 118, p.H3388

43. U.S. General Accounting Office, *Cost-Benefit Analysis Used in Support of the Space Shuttle Program* B-173677, 2 June 1972

44. *Congressional Record*, 11 May 1972, Vol. 118, p.57752

45. *Wall Street Journal*, 6 January 1972, p.2

46. "The Shuttle Decision", *Aviation Week & Space Technology*, 31 July 1972, p.7

47. Federation of American Scientists, open letter, May 1972

## The Technical Evolution

"...the space shuttle constitutes an excellent example of what is generally meant by 'systems engineering'."
-C.J. Donlan, Space Shuttle
Office, NASA-MSC

The technical evolution of the shuttle design was a complex process between NASA, its contractors and other parties. In the previous chapter, we concentrated on the shaping of the political decision to proceed with the shuttle. In this chapter we will examine how the design that was finally selected evolved. The concern here is with the technical community and its debates over the design. For the sake of clarity, the focus will be on the designs of North American Rockwell, the contractor eventually selected for the prime contract. The work of the other contractors will only be discussed when they had some influence on the North American Rockwell design. The general process viewed by engineers for vehicle design is illustrated in Figure 1. This discussion will trace the shuttle's development up to the manufacturing stage, but will not treat the production of hardware. As with the political evolution, it is the conceptual evolution that concerns us.

### Prelude

The September 1969 Space Task Group report to the President on post-Apollo goals included discussion of a space transportation system that would[1]

> "Provide a major improvement over the present way of doing business in terms of cost and operational capability.
>
> "Carry passengers, supplies, rocket fuel, other spacecraft, equipment, or additional rocket stages to and from orbit on a routine aircraft-like basis.
>
> "Be directed toward supporting a spectrum of both DOD and NASA missions."

The contributing report of PSAC's Space Science and Technology Panel attempted to address specific aspects of the requirements and risks of developing a space transportation system. While noting that the optimum payload dimensions were not well established, the results of preliminary NASA-DOD studies indicated a desirable range of 10,000-50,000 pounds into low

SPACE VEHICLE DESIGN PROCESS

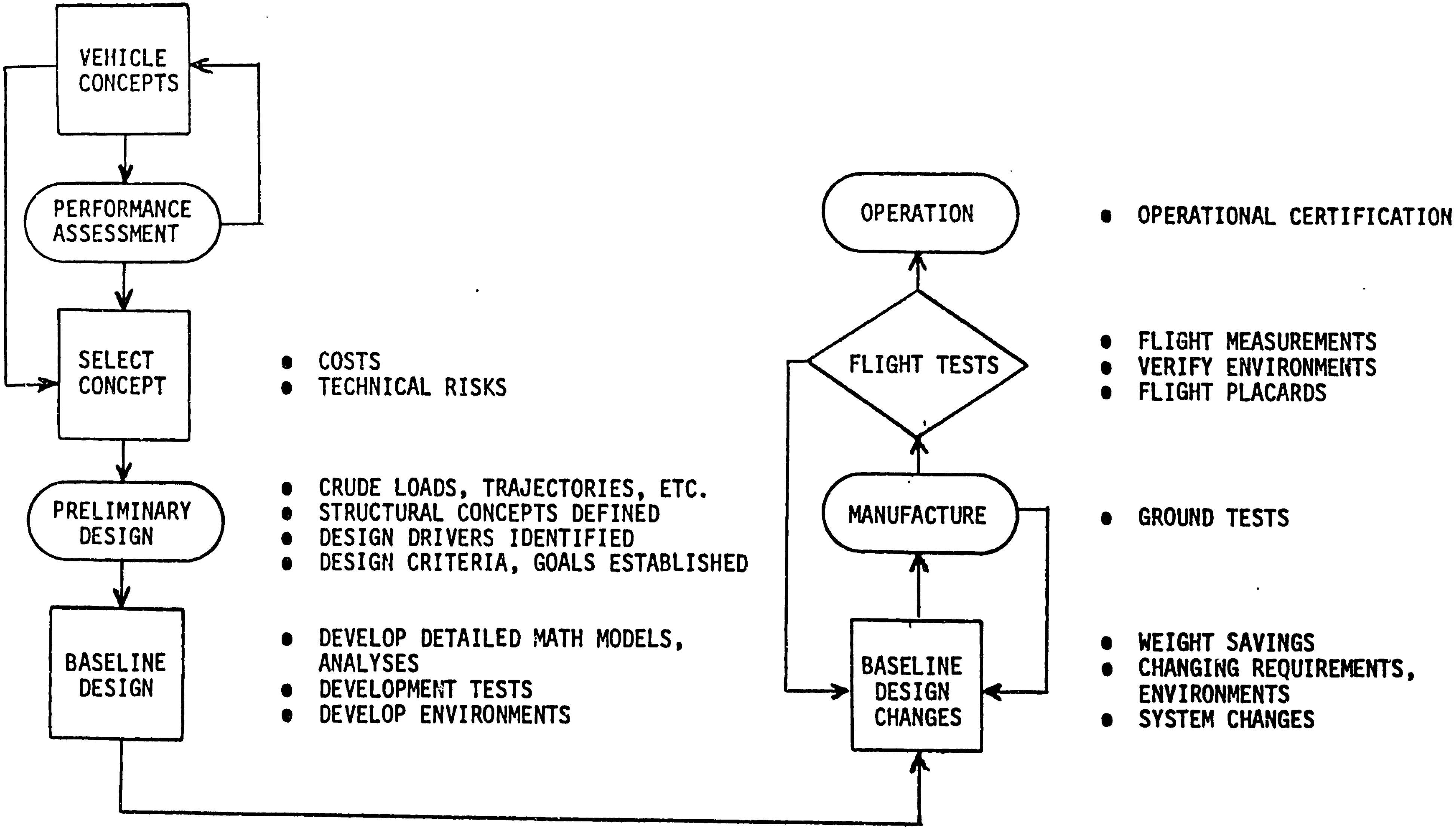

Figure 1

polar orbit. This would be sufficient for[2]

> "Delivery and return to low Earth orbit of both passengers and general science and applications payloads, delivery of modular sections of future space stations, and replacement of the Titan IIID for low Earth orbit defense payloads.
>
> "Delivery to synchronous orbit of military and civilian payloads, using the EOS (Earth-Orbit Shuttle) to take the OOS (Orbit-Orbit Stage, or space tug) and payload to low orbit and the OOS to transfer these payloads from low Earth orbit to synchronous altitudes.
>
> "Delivery of payloads for unmanned lunar and deep space exploration by carrying the payload and OOS to low orbit in the EOS and then using the OOS to accelerate to escape velocities.
>
> "Provision for transport to Earth orbit of propulsion units, cryogenic fuel and docking systems to permit orbital assembly of unusually large payloads for deep space or synchronous orbit missions, eliminating the requirement for the Saturn V."

While the initial justification for the shuttle was based on a support mission for a space station, many other missions were also envisioned early on for NASA, DOD and commercial payloads. As the space station dropped from sight through 1970 ( see page 21), it was these latter missions that formed the traffic basis for the shuttle's justification. The new capabilities that were seen as possible with a fully developed STS were multiple. In the PSAC report, attractive capabilities were:

"1) Reduction in cost of transportation to space...
2) Recovery and return to Earth of spacecraft in Earth orbit, permitting repair, refurbishment and modernization to extend spacecraft useful life, and perhaps reduction of spacecraft construction costs;
3) ...provision of a passenger capability...thus increasing substantially the possibility that engineering services by man in orbit might be found competitive with automated alternatives;
4) Reduction in the numbers of production and specialized launch, tracking and ground control facilities...
5) Increased flexibility in launch rate provided by freeing launch rate from production lead time;
6) Establishment of a realistic space rescue capability;
7) Increased flexibility in payload mix and character;
8) Provision for national security contingencies by the ready availability of transportation to orbit on short notice, with sufficient maneuverability and cross-range capability for a variety of missions;
9) Provision for orbital assembly of payloads and propulsion stages...
10) Provision of a more benigh environment for both payloads and passengers, with lower accelerations, lower acoustic

> stresses, absence of shock loads,...These features will permit more delicate equipment, lower cost modes of construction and lower development, qualification and acceptance testing costs."

The STG report concluded that a shuttle system was probably feasible as

> "...advances in rocket engine technology, additional experience in design for reentry conditions, and improved guidence, navigation and automated check-out systems now permit initiation of an experimental effort for a Space Transportation System with technical, operational, and economic characteristics satisfying the needs of both NASA and DOD."

The main areas of technical risk were seen to be in the nature of the turbulent flow transition and hence the heat load distribution during reentry of a winged vehicle; the scaling of the high-pressure $H_2/O_2$ rocket engine to about 600,000-1,000,000 pounds thrust and a 30,000 seconds running life; solving the materials problems that would be encountered in flight with complex heating and stress cycles; and achieving sufficiently low ratios of vehicle empty to gross weights to ensure an adequate payload. Some of the concerns with the shuttle were managerial. Since the shuttle was to be, in part, a routine transportation system, the methods of the Apollo program would not be adequate. Almost by definition, problems in the STS could not be solved by throwing money at them. While such economy was applied initially to the operating cost portion of the STS, it soon came to be applied to the development cost portion as well. Operations time was at a premium if the shuttle was to be used intensely enough to justify its cost. If airline-like operations were to be achieved, large amounts of time couldn't be spent tearing down and testing and retesting the space vehicle between flights. This meant designing the vehicle for rapid checkout and repair; which was a new requirement for a spacecraft.

In the August 1969 issue of <u>Astronautics and Aeronautics</u>, Al Tischler of NASA's Office of Advanced Research and Technology advocated a transitional approach to the era of fully recoverable space transports.[3] Arguing that fully recoverable systems would not pay-off as a short-term approach, Tischler noted several problems. Aside from formidable technical issues, only a few vehicles would serve national space transportation requirements, making for little in the way of production economies of scale. The high development costs would require a substantial amount of traffic to amortize the investment in a reasonalbe length of time. However, he noted that since the fully-recoverable vehicle was such a challenging project the

> "...appetite of the advanced launch vehicle for development funds could starve the development of the payload traffic on which its justification depends."

An early commitment to a particular fully recoverable design could result in a vehicle, after many years of development, that would be technically obsolete as it reaches initial operations capability. The spacecraft and its ground-based control facilities, and not the launch vehicle itself, were the largest parts of space mission costs at that time. This suggested that an evolutionary approach to low-cost space transportation would start with the reuse of spacecraft. This approach would later be adopted in a shuttle design that was only partially reusable, but first NASA had to give up its vision of a quantum advance in space transportation.

Not everyone within NASA was convinced of the feasibility of a reusable shuttle system being operational in the late 1970's. In a memorandum from the Program Manager of Advanced Programs and Technology under the Launch Vehicle and Propulsion Programs Director at NASA Headquarters in December of 1969, it was asserted that the shuttle would not be operational till the 1980's at the earliest. This was due to technological as well as economic and political reasons. These reasons were basically those referred to in the first chapter- public apathy, Congressional hostility and Presidential budget austerity. The technical reasons were again the concerns about a new high-performance $H_2/O_2$ engine, reusable thermal protection for reentry and structural behavior through a series of demanding flight regimes. All of these factors suggested a continuation of OSSA's (Office of Space Science and Applications) traditonal programs of[4]

> "...reasonable sized science and application programs with a broad constituency in the general public, the Congress, and

other Federal agencies."
Since budget constraints and technical problems would prevent the shuttle from taking an active role in the 1970's, the memo argued for a strengthening of the activities of the NASA office concerned with expendable launch vehicles (the Director of whom was addressed in the memo) as they would be the only means available for carrying out the missions of OSSA.

While seemingly prudent, such assessments were not the policy of higher-level NASA planning. NASA's Space Shuttle Task Group, an in-house planning group formed in 1969, prepared a report on recoverable versus expendable boosters for the shuttle design.[5] In the introduction, the conclusions are immediately stated

> "In some cases, the expendable booster is suggested as an interim step; in others as a final, optimum cost solution. The considerable study effort carried on over the past several years by NASA and DOD does not support either case for the expendable booster as being optimum in the long-term acquisition and operation of the system."

This avoided the question of the most practical method of reaching the long-term solution, which assumed enough space traffic to justify the cost of a fully reusable system, and the question of what would be used until the shuttle became operational. A series of "strawman" partially reusable shuttle designs were generated to demonstrate their difficulty and costs. Particularly damaging, in the view of the NASA Task Group, were the higher operational costs which were incurred before the development of the ultimate goal- a fully reusable system.

Even as early as 1969, a number of decisions had already been made in the design of the shuttle. As the result of numerous studies, some going back to World War II, concepts involving horizontal take-off, vertical landing, nuclear propulsion, single-stage-to-orbit, three stage systems, and expendable spacecraft had been eliminated. (For a discussion of the technical predecessors of the shuttle design, see references 6-8). Design selection started from the premise of some sort of two-stage, vertically-launched, horizontal land-landing, reusable or partially reusable system. Although some dissenters advocated more work on producing cheap, water-recoverable rocket boosters (e.g. Robert Truax's Sea Dragon and "big dumb booster" concepts), the dominant paradigm that designers worked from was that of "routine" and "airliner-like" operations with its vision of an aircraft returning from space to a runway landing. The initial debates centered about the driving mission requirements of the shuttle. Issues such as the payload dimensions and weight, the amount of payload return capability, the cross-range return flight requirement, and the desirability of an all-weather landing capability were seen as critical to driving the size, weight and technical sophistication of the shuttle. Receiving secondary attention were operational considerations such as the need for an intact abort capability, quick-launch capability, and efficient payload handling. For this last point, it was recognized that the space transportation vehicle should act like a truck, that is have a payload bay which is essentially unaltered from flight to flight.

In May 1969, NASA's Space Shuttle Task Group released a summary report of the requirements and needs for a space transportation system based on a reusable shuttle.[9] While the missions and capabilities were substantially those of the STG and PSAC reports, this study went into some of the specifics of a shuttle system. Vehicles discussed were sized to a common set of nominal conditions:

50,000 lbs. cargo and passengers, to orbit and back
270 n.m. orbit, 55° inclination
10,000 cu. ft. internal payload volume
Crews of two

These conditions were for the shuttle supplying a space station, which at that time was planned for the 270 n.m., 55° orbit. The report listed three generic classes of concepts:

1) Expendable launch vehicles of minimum cost design, plus an advanced reusable spacecraft;
2) Partially reusable vehicles, in which parts of the launch vehicle hardware are expended;
3) Fully reusable vehicles.

The first class was represented by a configuration consisting of a large solid propellant first stage, a low-cost pump-fed liquid propellant second stage, and a reusable lifting body spacecraft with an integrated payload compartment of 10,000 cu.ft. Several body shapes for the spacecraft were under consideration, along with decoupled landing modes (such as lifting parachutes and stowed wings).

The second class was exemplified by the 1½ stage (drop-tank) concept(see Figure 2). This aimed at reductions in operating costs by incorporating all ascent engines, avionics, and other expensive equipment into the reusable core vehicle. The only expended components were the propellant tanks for the booster stage. The design alternatives considered were the shape of the core vehicle, parallel versus an inclined arrangement of the drop tanks, and the possible use of a second set of drop tanks to reduce the size of the core vehicle while maintaining the payload bay volume. The main propulsion was to be provided by 4-8 liquid hydrogen/oxygen engines for a total thrust around 4 million pounds.

The "Triamese" or 3-element concept was a version of a fully reusable configuration (see Figure 2) that attempted to achieve economies in the development and operational costs by dividing the booster stage into two elements of the same size and basic form as the upper stage or orbiter element. Rocket engines in all three elements would operate during boost while being supplied from tanks in the outer (booster) elements. After separation of the booster elements for a flyback return to the landing site, the orbital element uses fuel from internal tanks to continue to orbit. Again, multiple hydrogen/oxygen engines were postulated for primary propulsion.

## Phase A Contracts

On 31 January 1969, NASA selected four contractors to study varying approaches to the shuttle vehicle, then called the ILRV (Integrated Launch and Re-entry Vehicle). $500,000 contracts were each awarded to General Dynamics (GD), McDonnell Douglas (McDAC), Lockheed (LMSC), and North American Rockwell

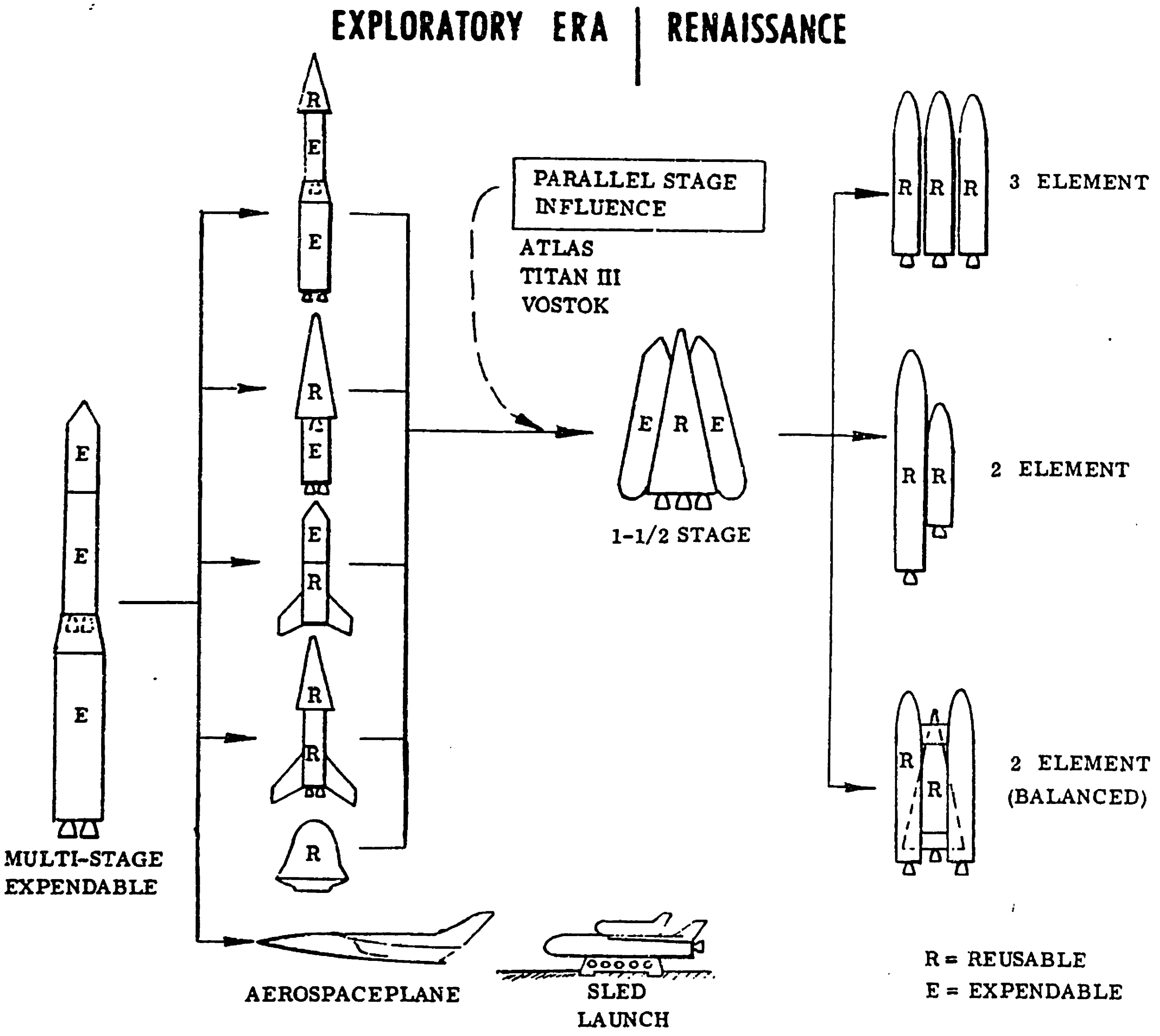

Reusable Launch Systems Evolution.

| | REASONS FOR INITIATION "BIRTH" | REASONS FOR DISCARDING "DEATH" |
|---|---|---|
| COMMON REASONS | *OPERATIONAL FLEXIBILITY<br>*COST REDUCTION<br>*"INVENTOR COMPLEX" | *NO MISSIONS<br>*NO FUNDS<br>*NOT READY FOR DECISION |
| CANDIDATES | | |
| REUSABLE SPACECRAFT | *RETURN MEN<br>*MIN. NEW ELEMENT | *HIGH OPERATING COST |
| REUSABLE UPPER STAGE | *MINIMIZE EXPENDED HARDWARE | *HIGH OPERATING COST |
| REUSABLE FIRST STAGE | *MINIMIZE EXPENDED HARDWARE | *HIGH OPERATING COST<br>*NO IMPROVEMENT IN ORBITAL CAPABILITY |
| REUSABLE TANDEM TWO STAGE | *MINIMIZE EXPENDED HARDWARE | *TWO VEHICLE DEVELOPMENTS<br>*NOT COMPLETE REUSE (EXPEND ADAPTER) |
| REUSABLE SINGLE STAGE | *COMPLETE REUSE<br>*SINGLE DEVELOPMENT | *LIMITED PERFORMANCE<br>*OPERATIONAL COMPLEXITY (RECOVERY & REFURBISH) |

Fig. 2. Exploratory Era Concepts

(NAR). General Dynamics and Lockheed were under the management of the Marshall Spaceflight Center (MSFC), McDonnell Douglas was under that of Langley Research Center, and North American Rockwell under that of the Manned Spacecraft Center (MSC). These phase A feasibility studies were to run to September 1969 at which time NASA would review the independently derived designs. At the same time, NASA began an in-house study of a fully reusable two-stage vehicle at MSC, which probably had some influence on NAR's studies due to the typically close relationship of NAR and MSC. By July, the ILRV contracts were all reoriented toward the two-stage approach, extending the studies to the first of November. This move was largely due to the conclusions of the Space Shuttle Task Group at NASA Headquarters in their May 1969 report, which firmly favored the fully reusable approach. (See Figure 3).

In the three months following the conclusion of the ILRV studies, NASA matched the results of the industrial studies with the mission requirements generated by the Space Shuttle Task Group (SSTG) and the President's Space Task Group, reinforcing its conviction that the two-stage reusable approach would satisfy mission demands. The transition to the phase B statement of work did not proceed without extensive internal NASA debate. George Low, the NASA manager for the Apollo spacecraft program, and soon to be Deputy NASA Administrator, dissented from the initial draft of the phase B statement of work. In a memo, Low claimed[10]

> "The statement of work is full of statements about autonomous systems, onboard checkout, factors that will lead to lower cost, etc. Have we really performed systems analysis to demonstrate these points, or are they merely wishful thinking?
>
> "The most important point I want to make is that the type of ground rules set forth in this work statement should be the results of conscious decisions by MSC senior management."

Low brought his concern over the initially loose and ill-defined design needs of the shuttle to the attention of NASA Headquarters. In a memo to Dale Myers, Associate Administrator for Manned Spaceflight and previously of North American Rockwell, Low drew a distinction between shuttle objectives and

NASA
S-70-10081

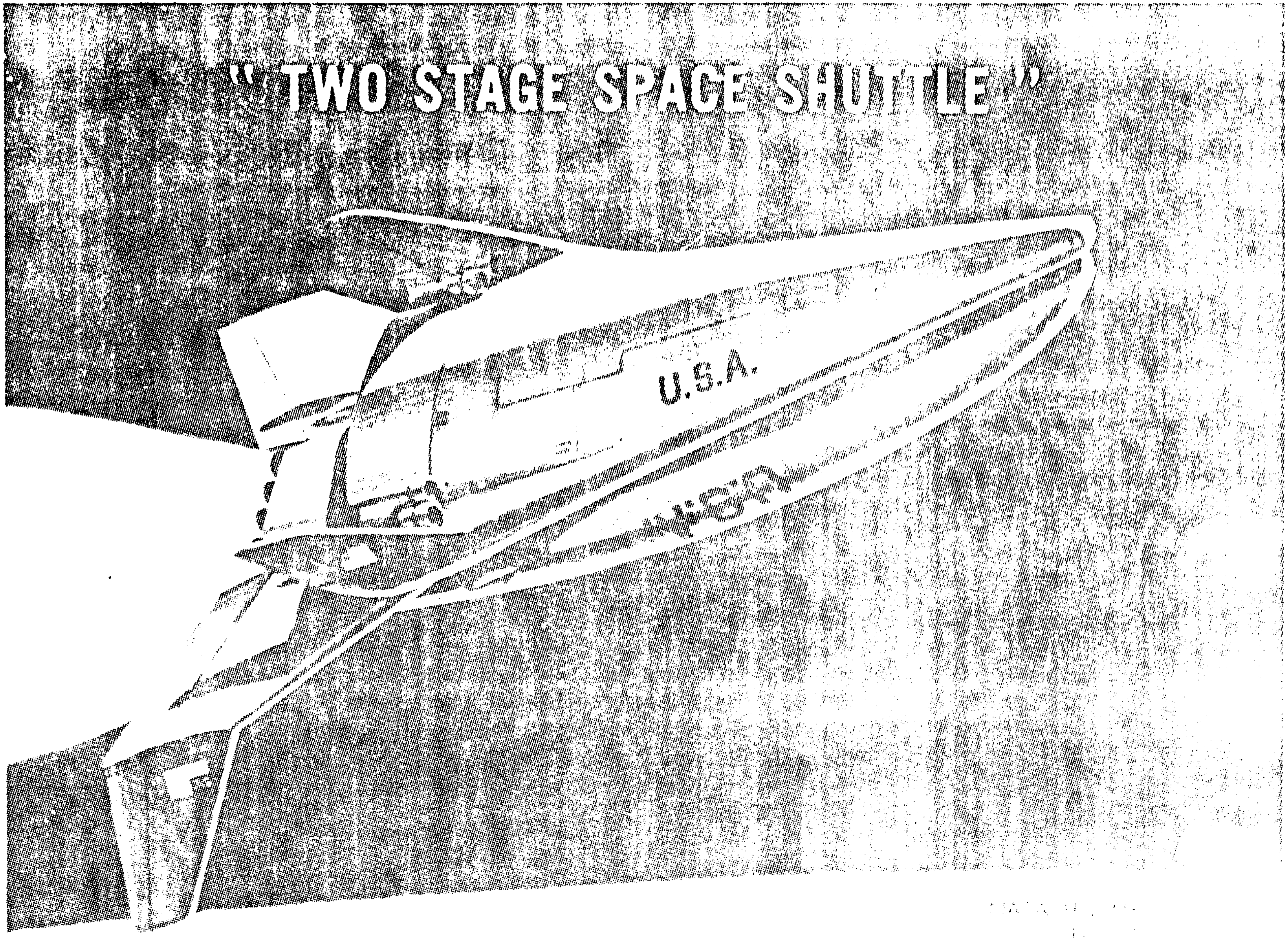

Figure 3

shuttle requirements.[11] There was only one objective of the program, "to provide a low-cost, economical space transportation system". Such an objective included both low development as well as low operational costs. Low was also one of the first to raise the issue that would eventually drive much of the shuttle's design, the tradeoff between operational and development costs. All other discussions of the shuttle over issues such as cross-range, go-around capability and even payload size and weight were requirements; not objectives. Requirements came after an analysis of the missions and traffic levels the system is to service. The question, of course, is what time scale should be used as a planning base. Low was clearly in favor of a somewhat long-range approach, stating[12]

> "We could probably demonstrate that a Gemini-type vehicle on a Titan III would be a more economical way to go into space than with a two-stage reusable system. This is especially true if we consider a short-range period of time and our existing thoughts on payloads. However, I think a Gemini-type system would set our sights too low...We would like to have a system that reduces operational costs so drastically that it creates its own payload market."

As the debate over the shuttle continued, the emphasis on low transportation costs was reduced while other proposed capabilities of the shuttle were highlighted. Instead of having one objective, the space transportation system came to have several as justification for the shuttle became more broadly based.

## Phase B Contracts

On 18 February 1970, NASA issued Request for Proposals (RFPs) in which industry was asked to bid on phase B definition studies; with proposals due March 30. Various aerospace companies entered into teaming arrangements to pool technical resources. Boeing joined with Lockheed, McDonnell Douglas with Martin, Pan American Aviation and TRW, and North American Rockwell was left initially alone. NAR and McDAC/Martin were chosen on 12 May 1970 to proceed on July 1 with the phase B definition of a two-stage, fully reusable, fly-back shuttle. Shortly after NAR and McDAC/Martin began work, dissident pressure within NASA and from companies who did not get phase B contracts managed the commitment of furthur NASA funds for alternative concepts for the shuttle design. Phase A awards were made to Grumman/Boeing, Lockheed and Chrysler. This resulted in a variety of concepts that were less promising, but the work of Grumman/Boeing would eventually come to influence the designs of both NAR and McDAC. This would result in a very different vehicle than was considered at the outset.

The phase B plan was divided into three periods: a configuration selection period of three months, a system selection period of three months and a five month period for preliminary design and costing analysis. This plan was to consider only the fully reusable system of a manned fly-back booster launching a manned orbiter vehicle, the design favored by NASA. NAR took on several partners for this work. GD's Convair Division had responsibility for the manned booster portion of the shuttle. IBM was committed to NAR for data management systems and had responsibility for interfacing avionics. Honeywell was responsible for vehicle guidance control systems in conjunction with IBM. American Airlines, eyeing regular space operations, examined maintenance, ground handling and turnaround techniques. The number of different partners was consistent with the NAR tendency to subcontract heavily to relieve overhead costs, have access to more expertise than could be internally maintained, and to avoid political charges of dominating the market.

The design that emerged from NAR's phase B efforts was the result of a NASA orientation to supporting heavy logistics to a space station. As such, it was assumed that there would be such a high level of traffic that development costs were secondary in importance to lowering operational costs. Costing values remained ill-defined as emphasis was placed on achieving technical viability rather than design economics.

The reference mission used by NAR assumed the use of a 12-man space station with its logistical requirements. Due to DOD requests for a high cross-range capability orbiter (see the chapter on Cross-range Capability), NAR produced both a low cross-range and a high cross-range vehicle. The low range orbiter was capable of maneuvering 200 n.m. to either side of an initial groundtrack on entry while the high cross-range orbiter was capable of 1,500 n.m. lateral range. It was decided to accept commonality on propulsion with the booster and orbiter using hydrogen/oxygen engines. The reusability goal was set at 100 flights before refurbishment or replacement would be required. The gross lift-off weight (GLOW) was 3.3 million pounds for either the high or low cross-range designs.

To achieve the 1,500 n.m. cross-range, the orbiter uses a high angle of attack at entry interface with a supersonic lift-over-drag (L/D) of 1.8 or greater. The low cross-range design also entered at a high angle of attack, but with a supersonic L/D of only 0.5 at maximum coefficient of lift. The underside of both orbiters experience severe reentry heating, with the high cross-range design taking the greater amount due to its maneuvering capability.(See Chapter 5). Some alternatives looked at variable geometry features to combine both capabilities. These were rejected due to a high vehicle weight to planform area ratio, resulting in adverse base heating temperatures and increased complexity due to the mechanical linkages required for movement of the wings. The two baseline designs that NAR took to the definition phase were a low, swept, fixed wing configuration and a low, swept delta planform with high cross-range. The reusable booster common to both designs featured a low wing with a high aspect ratio and a V-configuration tail (See Figure 4). Examining each of these designs will take us to July 1971, the conclusion of the initial phase B.

The low cross-range straight wing orbiter had a payload capability of 45,000 pounds to a 240 n.m. reference orbit at $55^{o}$ inclination. (The reference orbit provided a common basis for comparing the performance of different designs). The vehicle featured a flat bottom planform with the basic load-carrying structure of the fuselage made of titanium alloy covered with a thermal shield. The nose section contained the flight deck, passenger deck and avionics. An airlock on the flight deck gave access to a 15x60 ft. cargo bay in the fuselage center. Beneath the bay were the LOX and $LH_2$ tanks. The external shape was governed by stability requirements and low thermal constraints. At entry the flat bottom provided lift with pitch stabilized and trimmed by the negative body camber. The straight sides improved lateral and directional stability with flow separation aided by the acute edges around the fuselage. This lessened the amount of heat transfer to the sides and top of the reentering vehicle. The overall length was 183 ft. with a 125 ft. wingspan.

The high cross-range orbiter was capable of placing a 20,000 lb. payload into the reference orbit. A large planform area was used with high entry pitch angles for good hypersonic L/D and satisfactory subsonic performance. The external shape was driven by the quasi-delta wing form and included fin assemblies at the wing tips. Directional stability was enhanced by a combination of wing dihedral and vertical tail cant. Rudders and elevons provided control with interlinkage to prevent aerodynamic coupling. The turbofan engines used for ferry and landing duties were, like those of the low cross-range design, deployed in two paired nacelles from beneath the underbelly of the fuselage. The vehicle's overall length was 192 ft. with a wingspan of 125 ft.

The payload capability varied by a factor of 2:1 in favor of the straight wing design due to heavier thermal shielding of the delta wing configuration. Vehicle structure and thermal protection materials amounted to 96,134 lb. and 124,414 for the straight and delta wing designs respectively. Both had a lift-off weight of 723,946 lbs.

The booster portion, common to both orbiters, was a manned fly-back vehicle designed by General Dynamics during the phase B. The booster's task was to accelerate the orbiter to a satisfactory staging velocity and then return to a land landing. At a thrust-to-weight ratio of 1.4, the boost phase would not experience more than 3g's. The mission profile had a vertical launch to a staging at 42 miles altitude and a velocity of 9,172 ft/sec followed by a 4g reentry and a cruise return to a conventional runway at 155 knots. The baseline configuration featured a fixed

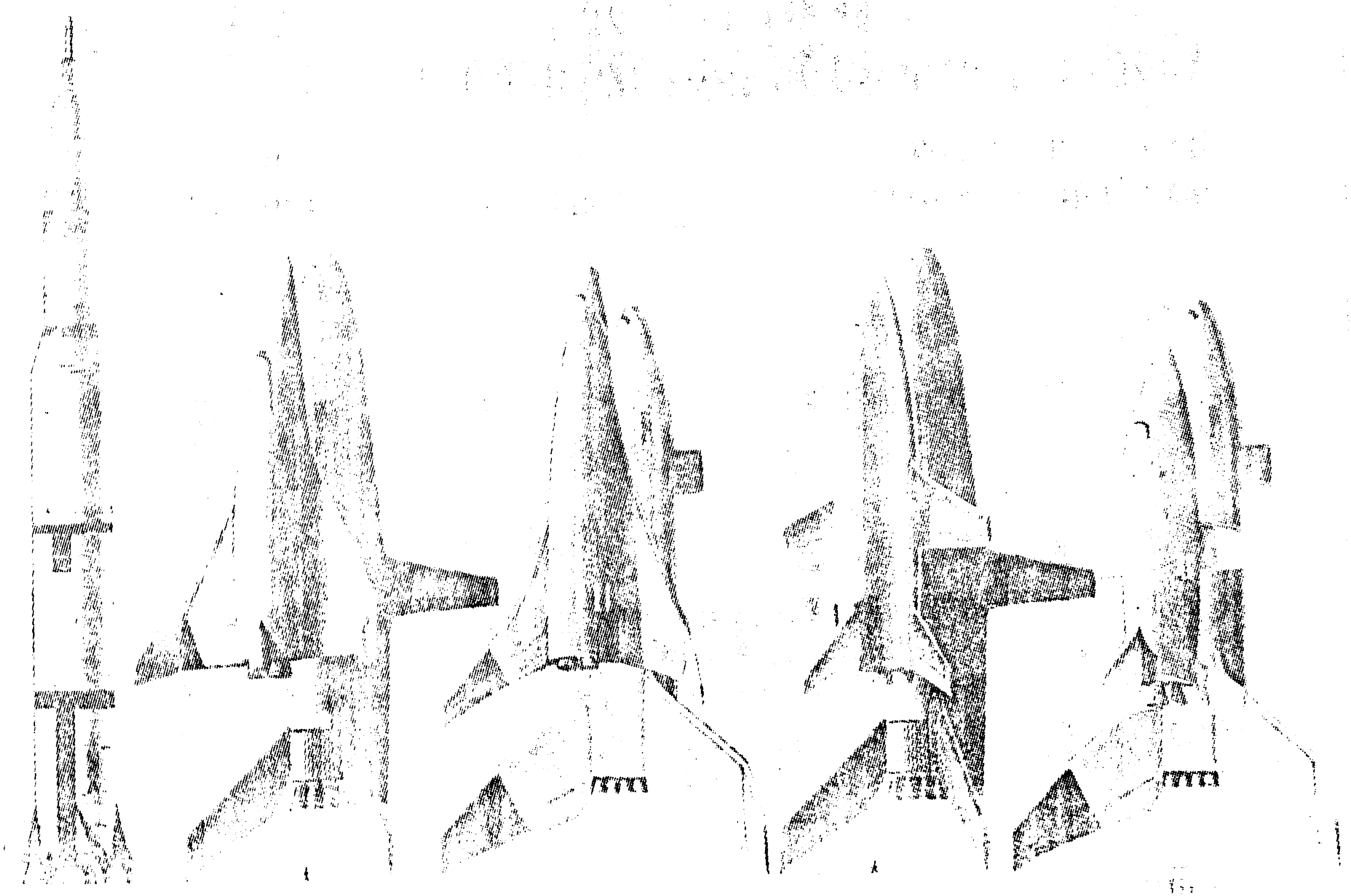

Figure 4

straight wing and a V-tail with a total planform area of more than 3,000 sq.ft. The L/D of 6.7 at subsonic speeds and a hypersonic value of 0.5 were quite satisfactory in view of the quick descent and low range the booster would cover.

The $LH_2$ tank occupied more than half the internal volume with the LOX tank forward of that. The nose contained the two-man flight deck with four turbofans retracted into the fuselage beneath this area. Propulsion systems included 12 aerospike engines producing 4.8 million lbs. of thrust at lift-off, 22 attitude control thrusters, and four 40-50,000 lb. thrust air-breathing engines. Other specifications of this vehicle were

| | |
|---|---|
| Overall length | 230.6 ft. |
| Wingspan | 141.2 ft. |
| Height to tail | 64.0 ft. |
| Lift-off weight | 2,738,222 lbs. |
| Landing weight | 463,990 lbs. |
| Designation | GD B8C |

NAR's Space Division began phase B study of the shuttle in July 1970 using the high and low cross-range orbiter varients and the General Dynamics B8C booster described above. (See Figure 4). The work statement for phase B anticipated a configuration selection by the end of September and a 90-day review determined that the high cross-range orbiter should be selected for definition and preliminary design to the subsystem level. This was the 134C design described above. Changes came to the booster, redesignated the B8J. Its V-tail configuration was replaced with a vertical rudder/stabilizer assembly and a horizontal tail. Wind tunnel work at Langley Center had displayed improved pitch damping and yaw control with the more conventional arrangement.

Six month into the studies, a NASA review of the configuration groundrules for the second half of the phase B determined that the vehicle must accelerate a 25,000 lb. payload into the reference orbit (a typical space station resupply mission), provide 1,500 ft/sec on-orbit maneuver capability and be able to subsonically maneuver for landing with air-breathing engines. General Dynamics substituted a delta wing for the high aspect ratio design of the B8J. The vertical stabilizer remained unchanged with pitch attenuation assured by the addition of a canard mid-way between the leading edge fillet and the nose. Thrust for the booster was increased to 6.48 million pounds. This new configuration was designated B9T. The orbiter was redesigned to a configuration designated 161B. The outboard stabilizers were gone along with the twin rudder assemblies and instead the slightly ogive wing terminated in a knife-hatch trailing edge set $95^{\circ}$ to the elevon plane. The vertical tail incorporated a split rudder with air brake capability and the flat underbody was faired across to a circular nose section just forward of the crew compartment. Two 620,000 lb. thrust engines were positioned in parallel aft of the cargo bay and above the wing carry-through box.

During the first quarter of 1971, additional inputs to the groundrules resulted from a two-day conference in Williamsburg, Virginia, in January 1971. The conference was a meeting of NASA, contractor and Air Force personel to agree on a common set of design requirements to meet joint NASA-DOD mission demands. (Details of the Air Force-NASA relationship are discussed in Chapter 3). While many of the new groundrules had been discussed throughout the previous design efforts, the outcome of the Williamsburg conference was a set of formal requirements. In addition to the reference mission of 25,000 lb. to a 270 n.m., $55^{\circ}$ degree orbit, the orbiter would also have to demonstrate a 65,000 lb. lift capability to a 100 n.m., $28^{\circ}$ orbit and 40,000 lb. to polar orbit with a 1100 n.m. due east turn capability on reentry. The rationale for these requirements are discussed in Chapters 4 and 5, but the new lift capability was essentially driven by geosynchronous payload weight requirements and Air Force desires for a high cross-range vehicle.

The final phase B proposal from NAR was the 161C orbiter and the B9U booster. Some 933 hours of windtunnel work was used to turn the 161B/B9T into this variant, discussed below.

### Final Phase B Design of NAR

The 161C orbiter was fabricated primarily of titanium and was substantially larger than the high cross-range design of mid-1970. The 60° swept delta wing with a soft chine body of

| | |
|---|---|
| Overall length | 210.0 ft. |
| Wingspan | 124.0 ft. |
| Height to tail | 61.0 ft. |
| Lift-off weight | 859,000 lb. |
| Designation | NR 161C |

moderate fineness provided good subsonic characteristics with an improved L/D in the hypersonic and transonic region. The blended wing/fuselage interface contributed to the effective damping of shock-wave propagation while the improved tail area reduced the supersonic drag relative to the earlier 134C design. The adoption of a vertical tail provided good coefficient of lift stability at low angles of attack and minimized control reversal, coupling, and yaw at transition. Full span elevons provided pitch and roll control for all phases from entry to landing, but yaw control was aerodynamic from Mach 7 only. The auxilary propulsion system was used for yaw down to 100,000 ft. The L/D of 7.5 at 9° in subsonic flight enhanced the flare and low speed handling characteristics.

The orbiter propulsion systems were required to carry the vehicle from a base of 48 miles and 8,500 ft/sec to orbit, perform maneuvers and de-orbit. For orbital insertion, the 161C used two 632,000 lb. thrust engines fed from the single forward $LH_2$ tank and the two cylindrical LOX tanks. The total propellant load for the main propulsion system was 565,940 lb. with an additional 25,441 lb. provided by the engines, thermal protechtions, propellant feed system, helium pressure bottles and recirculation system. The orbital maneuvering system would provide delta-v increments for phasing, orbital changes, and de-orbit. Three 10,000 lb. thrust $LOX/LH_2$ engines were placed in a flaired closeout above the two main propulsion engines and beneath the rudder area. About 30,100 lb. pf propellant would be carried for a total delta-v capability of more than 2,000 ft/sec. For ferry mission and post-entry cruise, four JP fuel turbojets were provided as an option. Their weight took more than 18,200 lbs. of what would normally be payload. This severe penalty prompted much discussion and spurred a test program to determine more of the characteristics of unpowered flares an landings. (See Chapter 7). The 161C constituted a definitive design of a fully-reusable two-stage shuttle system. Non-recu ring DDT&E costs were estimated at $4.9 billion (in then-yea dollars) with a peak annual funding of 1.1 billion in FY 197

The B9U booster stemmed directly from the B8C discussed earlier. The B9U was a low delta wing vehicle with a single vertical tail and a small canard surface mounted forward of the fuselage centerline. The main function of the booster wa to accelerate the orbiter to a velocity of about 10,000 ft/se at an altitude of 242,000 ft. More than 75% of the gross weig would be propellant. Overall, the $53^{\circ}$ delta wing provided goo stall characteristics and stability across the entire flight regime with adequate control effectiveness provided by the vertical tail.

| | |
|---|---|
| Overall length | 269.0 ft. |
| Wingspan | 143.5 ft. |
| Height to tail | 102.0 ft. |
| Lift-off weight | 4,188,000 lbs. |
| Landing weight | 658,000 lbs. |
| Designation | GD B9U |

The main propulsion system consisted of twelve 550,000 lb. thrust, high-pressure LOX-$LH_2$ engines mounted on the aft thrust structure and producing a combined lift-off thrust of 6.6 million lbs. As the booster would never enter orbit, the only other reaction propulsion system required was the auxila system for attitude control down to final transition followi entry. Thirty 2,100 lb. thrust LOX and $LH_2$ engines were positioned at various locations for roll, pitch and yaw control. The air-breathing engine system consisted of 12 low-bypass ra tio derivatives of the JTF22A-2 engine with a single fuel tar holding 109,000 lbs. of JP-5 fuel. This provided a 400 mile f back capability and a substantial ferry range. A secondary fu tank, located in the extreme nose beneath the flight deck, wo hold 35,000 lbs. of fuel for transfer to the main tank durin cruise. The engines themselves were grouped into three sectio of four each and mounted within the center fuselage and each wing, facing rearward. Deployment was effected by rotating th unit through $180^{\circ}$ from a forward pivot point, bringing the engines into a forward facing configuration beneath the undersurfaces. This arrangement was later modified to lessen the criticality of the forward pivot point as shown in Figure 5. A drawing of the 161C/B9U in full flight is shown in Figure 6. The configuration would have a total length of 290 ft., a maximum span of 143.5 ft., and a mated height of more than 100 ft. from the bottom of the booster fuselage to the top of the orbiter fuselage. The GLOW would have been 5.047 million lbs.

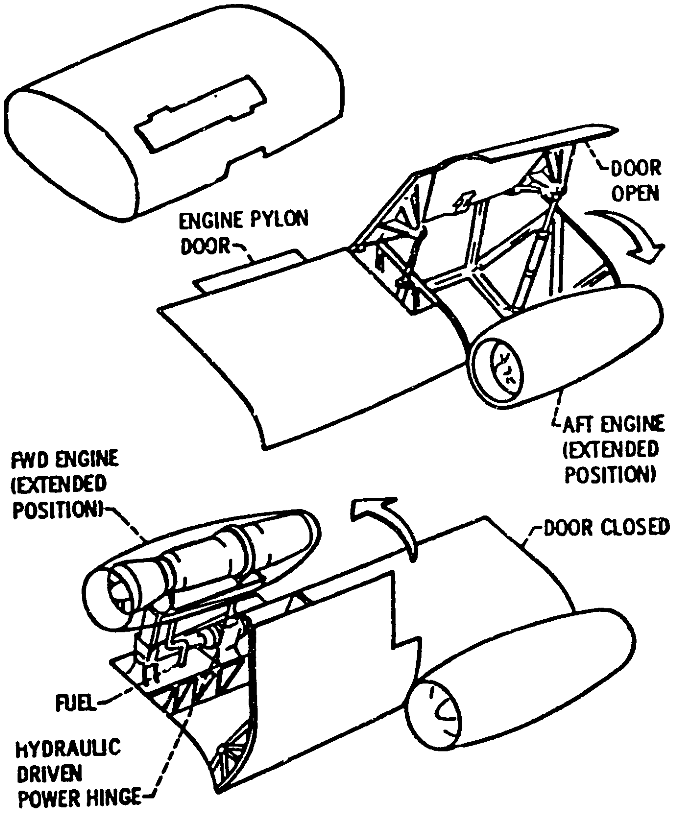

Figure 5. - Orbiter engine installation (North American design).

The phase C/D schedule proposed by NAR saw a go-ahead in the first quarter of 1972, preliminary design reviews in the first and second quarters of 1973, a critical design review in the second quarter of 1975 and a horizontal flight one year later. Orbital flight test would occur in the second quarter of 1978 with all five orbiters and four boosters flying in 1980. The overall DDT&E costs were initially estimated at about $10.12 billion, which dropped to $9.12 billion by the end of 1970.

S-71-15773

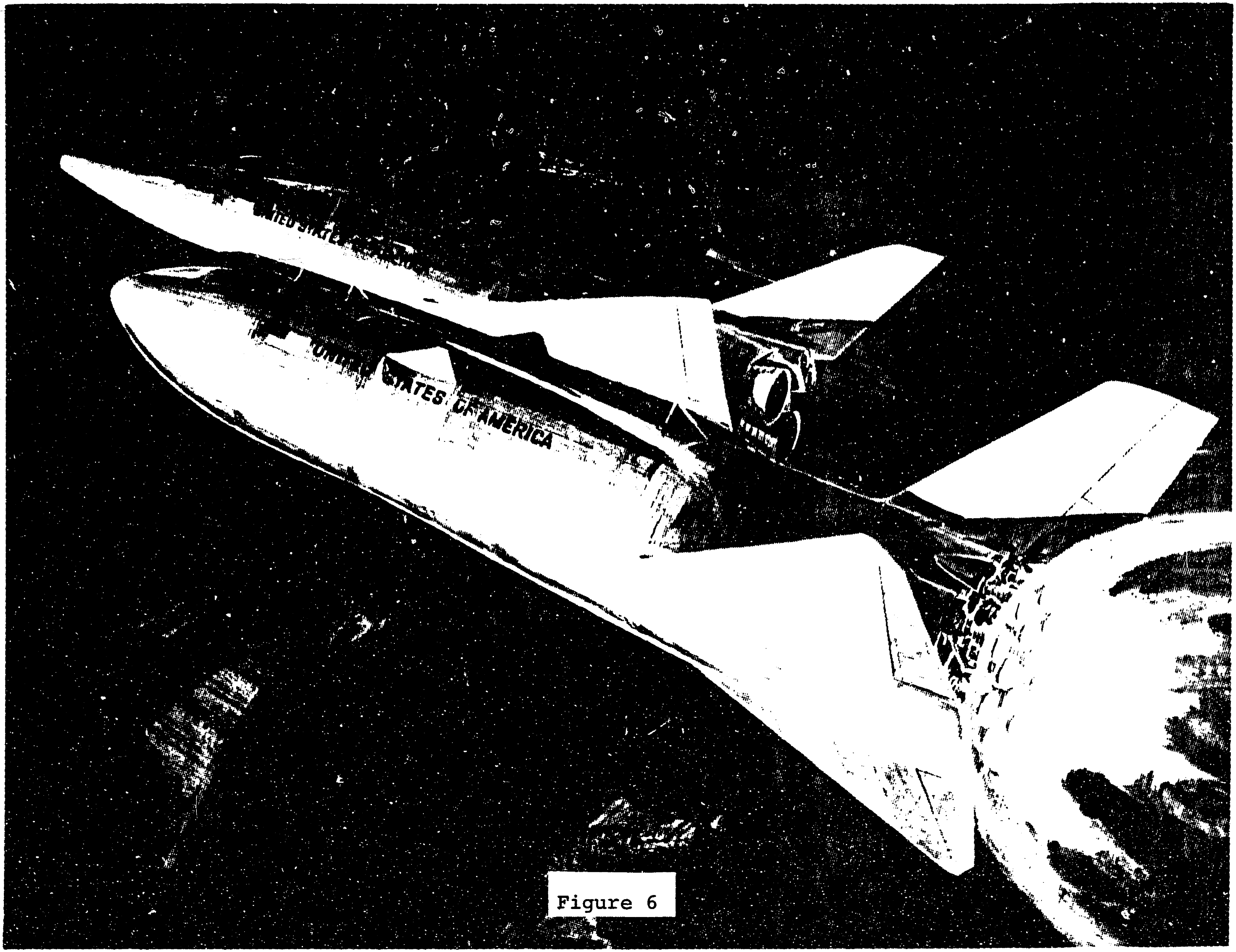

Figure 6

NASA
L-71-1773

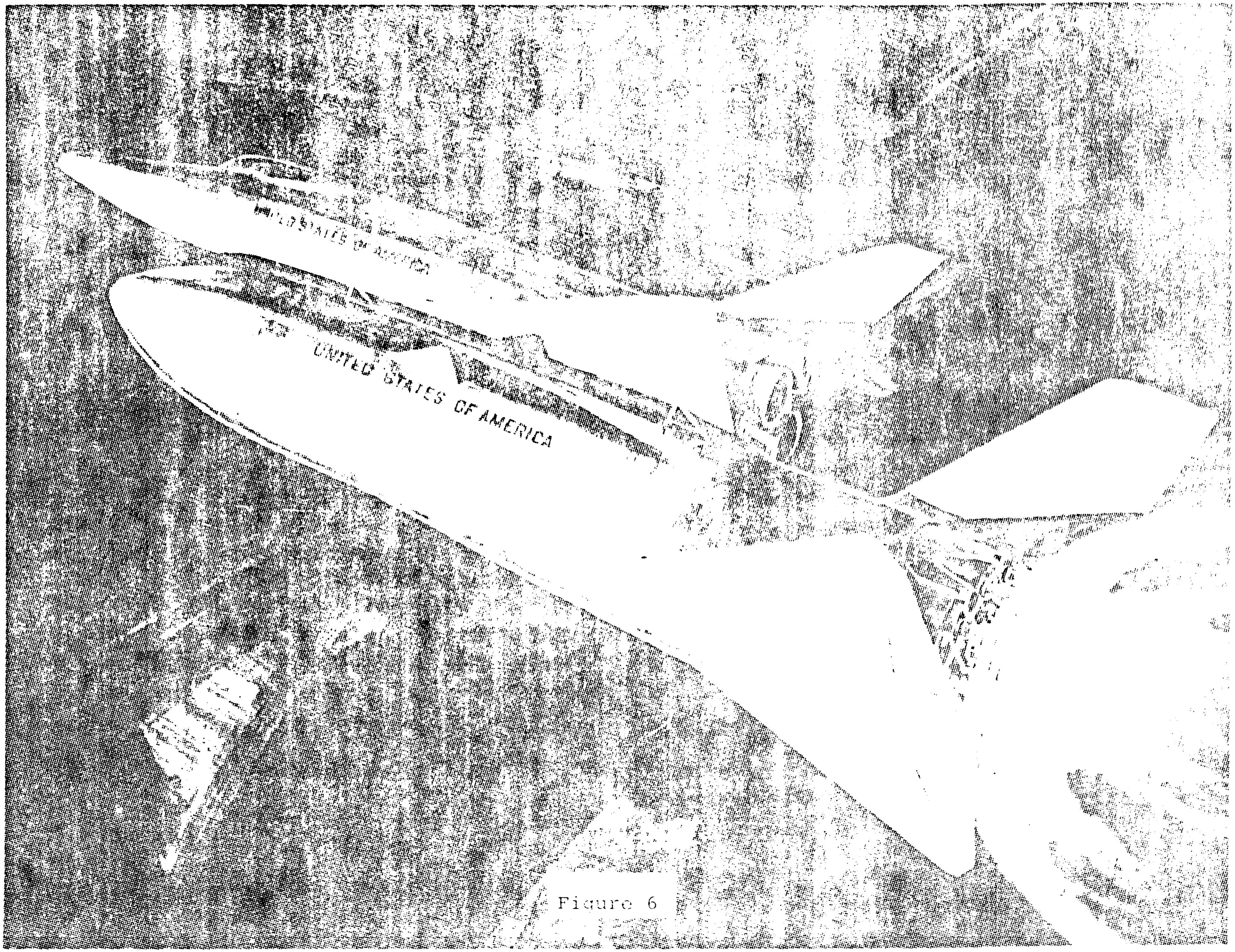

Figure 6

Design changes due to groundrule alterations in the first quarter of 1971 (see page 61) brought the final phase B closeout figure to \$9.24 billion. Total cummulative cost to FY 1979, at the conclusion of development, would be \$8.44 billion with peak funding of \$1.92 billion in FY 1976. Thereafter, operations would require between 50 and 100 million dollars per year.[14] Orbiter fabrication and development costs would require a total investment of \$4.89 billion with a peak annual figure of \$1.07 billion in FY 1976. Booster development would absorb \$3.53 billion over eight years with a peak of \$0.85 billion in FY 1976. The 161C/B9U represented the most sophisticated, but functional design since NAR began its studies a year before. Its major failing lay in the high costs such a system would incur while NASA had severe constraints on its budget. Requirements to keep peak funding needs to about \$1 billion with a total cost of about \$5 billion (1970 dollars) made the production of the NAR design an impossible task. The orbiter alone would absorb the funds NASA could commit. From mid-1971, the entire design approach would change as pressures from Washington forced a reevaluation of the fully-reusable approach.

## The First Phase B Extension

From the phase A studies of alternate shuttle concepts, the design of the Grumman/Boeing team emerged to gain wide attension. From a "dark horse" position, this team emerged as a strong possible contender for the final phase C/D contract. The source of this prestige was its H33 design for a two-stage reusable shuttle in which the orbiter would carry its main liquid hydrogen fuel in disposable external tanks. (See Figure 7). This change, originally suggested by Boeing, resulted in a simplification of the orbiter design with its overall size driven now by the size of the payload bay and not the size of the large $LH_2$ tanks. This allowed the carrying of somewhat more fuel and a lessening of the orbiter's dry weight which in turn allowed the orbiter to take over more of the burden of getting to orbit. This allowed for a lower staging velocity of 6,000 ft/sec versus 10,000 ft/sec. The lower staging velocity meant less thermal

NASA
S-71-38213

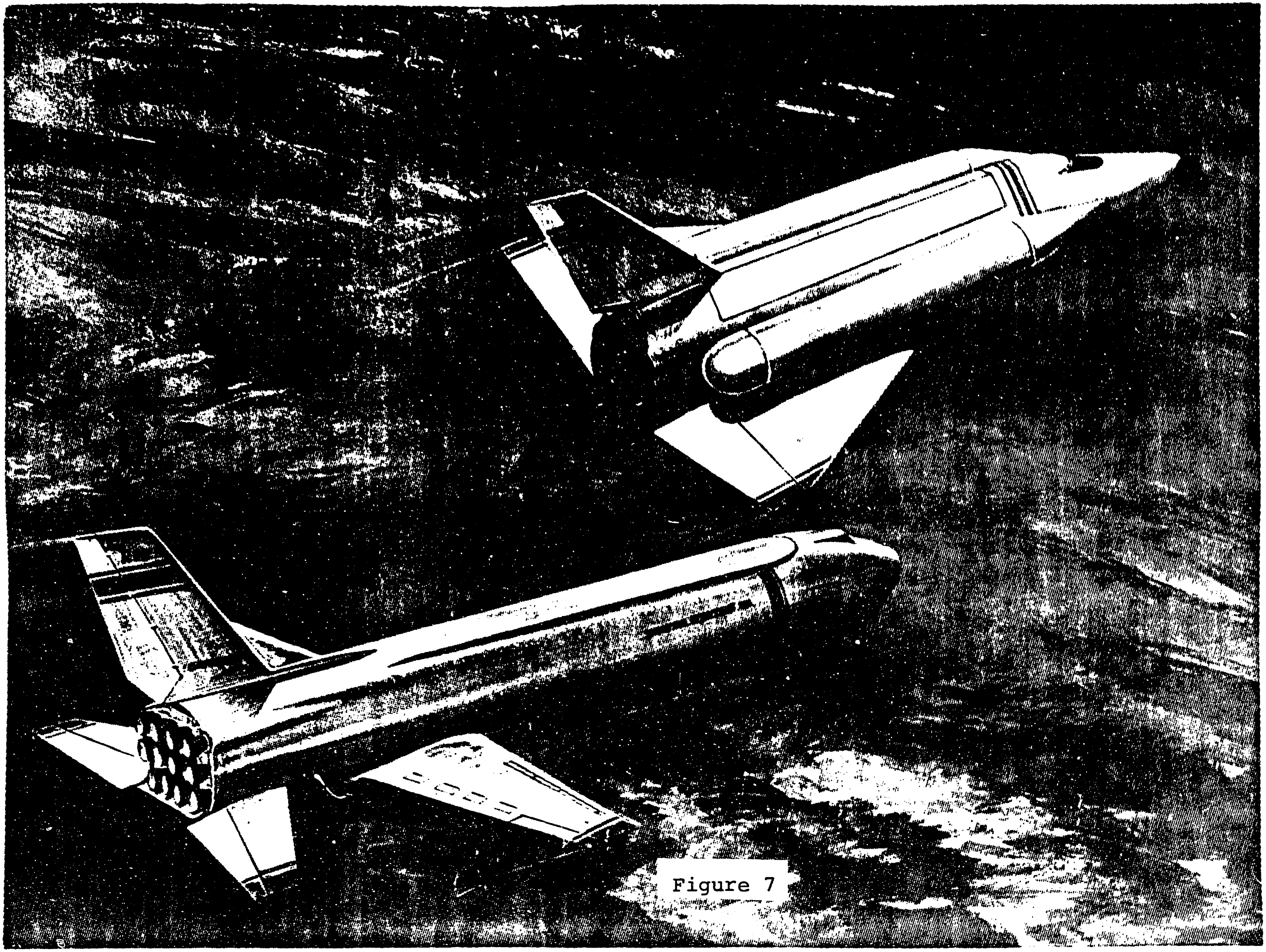

Figure 7

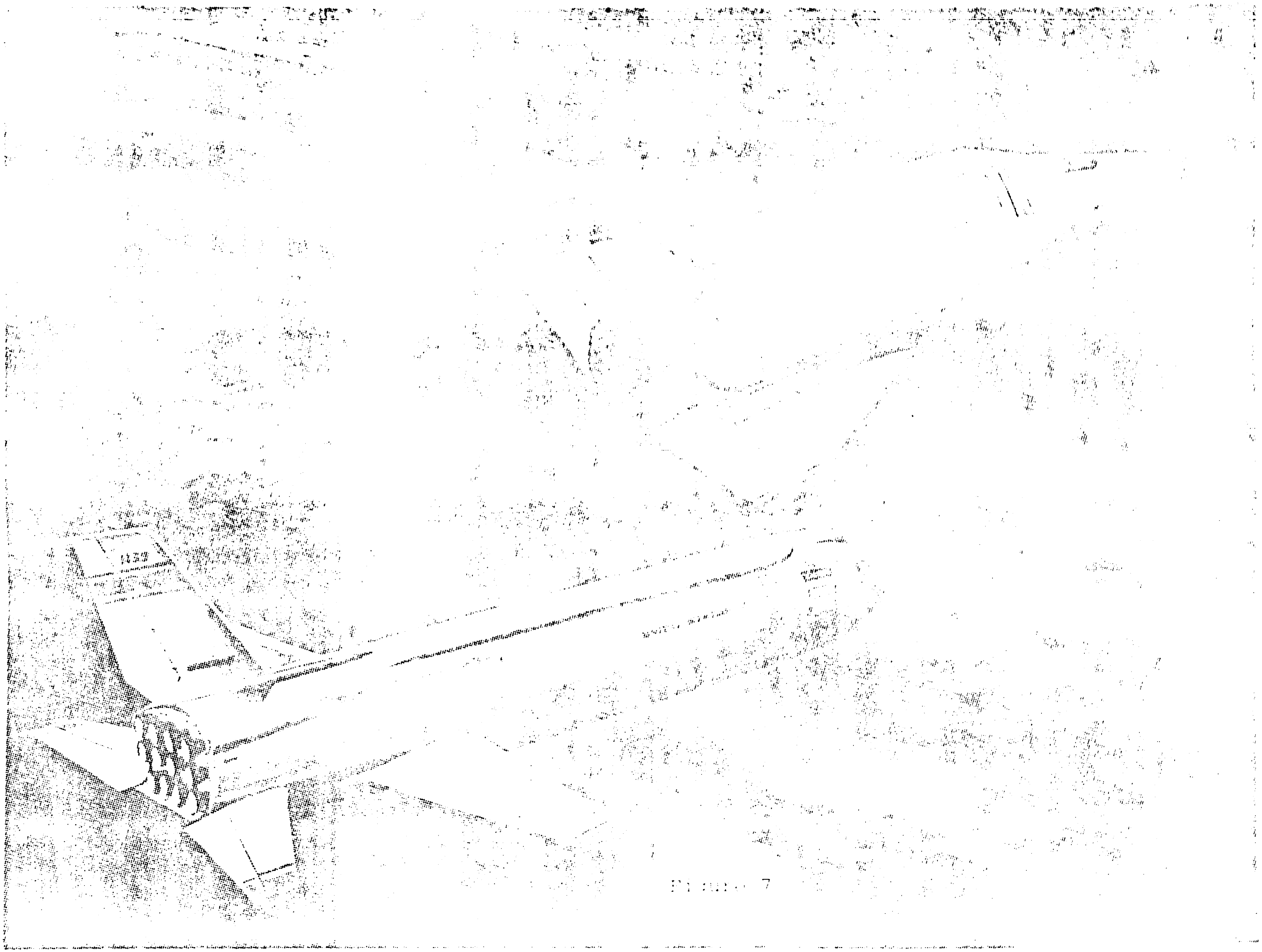

Figure 7

loading on the booster, allowing the consideration of a heat sink design for the booster that would not require a separate thermal protection system. The external tank approach appeared sufficiently promising for NASA to amend its phase B contracts and extend them into phase B' for NAR and McDAC to study the concept for lowering peak funding requirements and overall program cost.

The booster by Boeing use a low, conventional straight wing design. The booster's propulsion consisted of twelve 415,000 lb. thrust main engines and eight air-breathing turbofans recessed into deployable inlets. Like the NAR and McDAC designs, the orbiter used a delta wing design with a centerline fin. Instead of internal tanks, $LH_2$ for the orbiter was stored in parallel external tanks on the orbiter's flanks. The GLOW of the complete H33 system was 3,925,260 lbs. The cost per flight was estimated at $6.0 million (1971 dollars), which was about 50% above that of the other designs. The development cost was $8.1 billion with a funding peak of $1.7 billion.[15]

| | |
|---|---|
| Overall length | 245.0 ft. |
| Wingspan | 177.5 ft. |
| Stabilizer span | 11.3 ft. |
| Height to tail | 74.0 ft. |
| Lift-off weight | 2.8 million lbs. |
| Designation | H33 Booster |

| | |
|---|---|
| Overall length | 157.0 ft. |
| Wingspan | 97.0 ft. |
| Height to tail | 61.3 ft. |
| LH2 tank length | 84.5 ft. |
| LH2 tank diameter | 14.8 ft. |
| Designation | H33 Orbiter |

Further studies in the phase B extension showed additional savings in development costs would accrue from placing both the LOX and $LH_2$ tanks in a single external tank structure, permitting a smaller orbiter (see Figure 8). In parallel with this effort were studies of the feasibility of adopting a phased development plan whereby an interim expendable booster would provide an early flight date, flatten the cost profile and provide the basis for developing a manned flyback booster later. Costing analysis showed, however, that this would not only raise

# $LO_2/LH_2$ Orbiter Vs $LH_2$

(15 X 60 Cargo Bay)

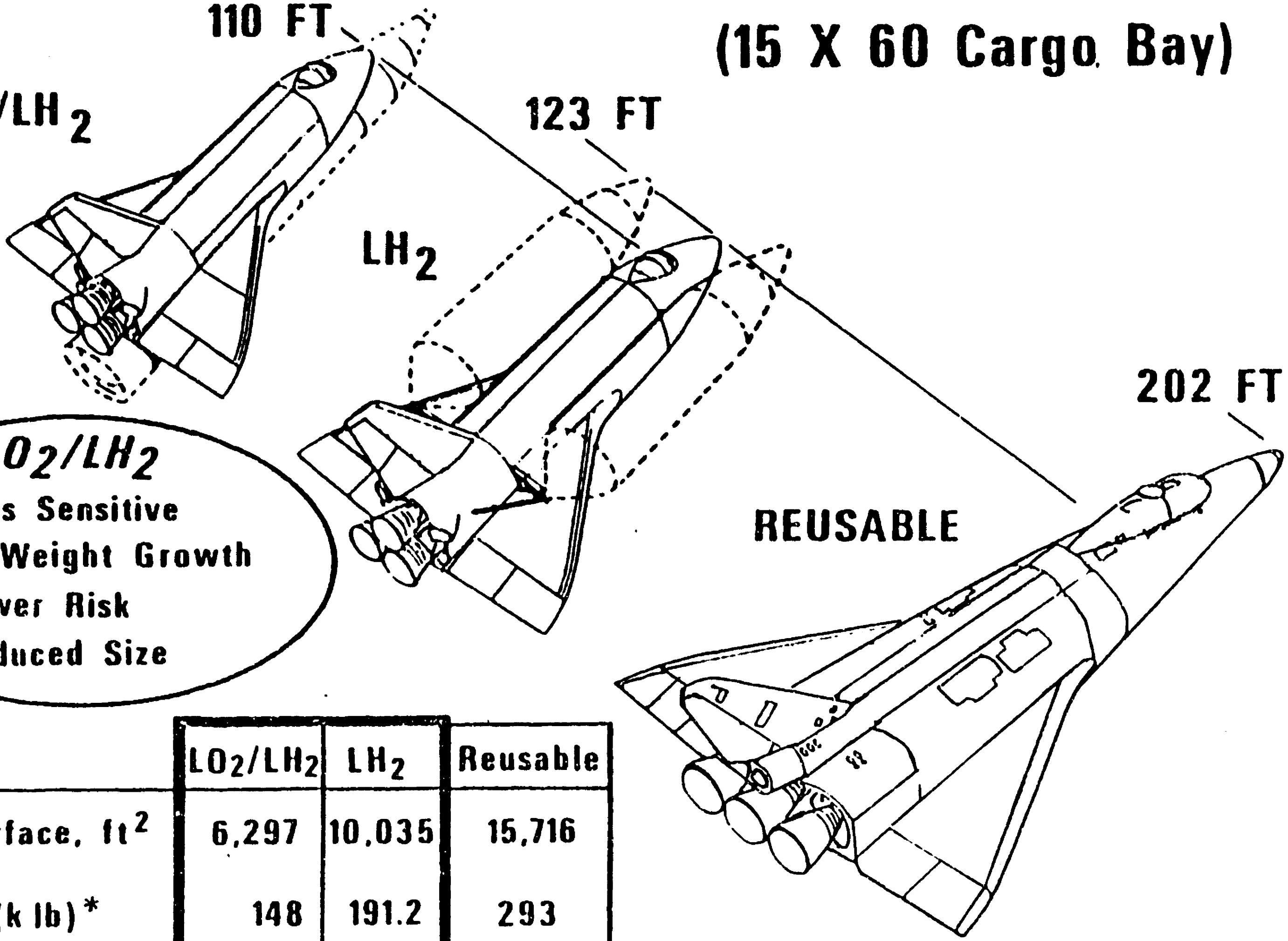

***$LO_2/LH_2$***

- Less Sensitive to Weight Growth
- Lower Risk
- Reduced Size

| | $LO_2/LH_2$ | $LH_2$ | Reusable |
|---|---|---|---|
| Body Surface, $ft^2$ | 6,297 | 10,035 | 15,716 |
| Dry Wt (k lb)* | 148 | 191.2 | 293 |
| 3 Hi-Pc-$F_{vac}$ Eng (k lb) | 420 | 447.5 | 551 |

*Less Tanks & Payload

Figure 8

per flight costs, but the overall program did not produce any savings, although peak funding requirements were reduced to about $1 billion.

Other possibilities examined by NASA in the initial period of the phase B' effort were the development of a "mini-shuttle" whereby a smaller orbiter vehicle is first developed and launched on an expendable booster. The recoverable booster and the desired full-scale shuttle would be phased in later. The glider approach was the production of a smaller version of the orbiter, but without the main engines, to be launched on an expendable booster. Again, the full-size shuttle and recoverable booster would be phased in later. The glider would carry a payload of 12x40 ft. with a weight of 30,000 lbs. It would have sufficient propulsion for on-orbit maneuvering but would not have the engines or propellant tanks required to propell itself into orbit. Orbit would be attained by a two-stage vehicle of the Titan IIIL class. Requirements for a 15x60 ft., 65,000 lb. payload capability would be met with the expendable vehicle until the full shuttle could be developed. The glider would help develop the aerodynamics and structures data for the full shuttle. The mini-shuttle could carry a 15x40 ft. payload weighing 40,000 lbs. Using J2-S engines for propulsion into orbit and an expendable LOX/$LH_2$ tank, it would in effect be a slightly enlarged version of the glider with a main propulsion system. The mini-shuttle would be propelled to staging velocity by an expendable booster, such as the first stage of a Titan IIIL or a cluster of 120 in. diameter solids. Later, the J2-S engines could be replaced by the high pressure hydrogen/oxygen engines and the recoverable first stage used to replace the expendable booster. Finally, the mini-shuttle could be stretched to provide full payload capability. The problem with this was in part due to the difficulty of stretching delta wing vehicles. More fundamental was the costing analysis which showed both of these approaches suffered from the same problems as the adopting of an interim expendable booster. Operational capability was sacrificed, inital operations were delayed, and overall operating and program costs either stayed the same or even increased.[16]

## The Second Phase B Extension

Due to the failure of the phase B' effort to get peak funding requirements and development costs below the OMB constraints and desiring to lower the overall technical risk, NASA initiated a phased technology approach in the last quarter of 1971. Overlapping somewhat with work still in progress with phase B', this new, second extension of phase B contracts became phase B". Also known as the MKI/MKII approach, this concept would develop a Mark I shuttle with reduced capability and less advanced technology and subsystems first. As new technology and subsystems were developed, they would be introduced some years later into a Mark II shuttle design which would have the full planned capabilities. The Mark I would use available ablative thermal protection in areas of the orbiter subject to the highest heating. Main propulsion would be provided by four J-2S engines, developed as an extension of the then existing Saturn J-2 engine. Avionics would be state-of-the-art with reduced capability for autonomous operation from ground control. Fully reusable thermal protection and new high-pressure engines along with more advanced avionics would be phased into the Mark II. Payload weight capability, particularly to polar orbit, was reduced by the lower thrust engines. Cross-range capability, with its high heating environment, was reduced due to restrictions on the regime that could be flown with ablative thermal protection. The Air Force was concerned that all of these degradations would prevent the shuttle from taking over enough missions to justify retiring it expendable vehicles.[17] Use of the shuttle would lower the production rate for existing expendables, possibly raising the per unit cost, and could result in an overall DOD space program that was more expensive than before. Combined with analysis that this time-phasing of the technology, while reducing the technical risk somewhat, resulted in an increase in the overall development cost, the MKI/MKII approach was dropped by about November 1971.[18]

## The Emergence of TAOS

NAR briefed NASA on 1 September 1971 on the results of its phase B activity and on September 12 received instructions to redirect its efforts to defining a new shuttle configuration, with the same orbiter capabilities as established in the January 1971 Williamsburg meeting. Now, however, the orbiter would have to be compatible with a new family of alternative boosters (see Figure 9). The introduction of the external tank orbiter had become a NASA baseline design as of August 1971. The lowering of the staging velocity allowed the possible utilization of ballistic liquid boosters or solid fuel boosters that were more efficient at the lower staging velocities. Most importantly, such concepts allowed the elimination of the manned reusable booster and its cost. The new alternate boosters were pressure-fed and pump-fed unmanned liquid fuel boosters in parallel or series burn configuration with the orbiter's main propulsion system. Finally, there was the concept of using solid fuel boosters firing in parallel with the orbiter's main engines. The orbiter configuration for these systems was identified in NASA-MSC planning documents as the MSC 040A. This design provided a wing and fuselage shape, reaction control system location,

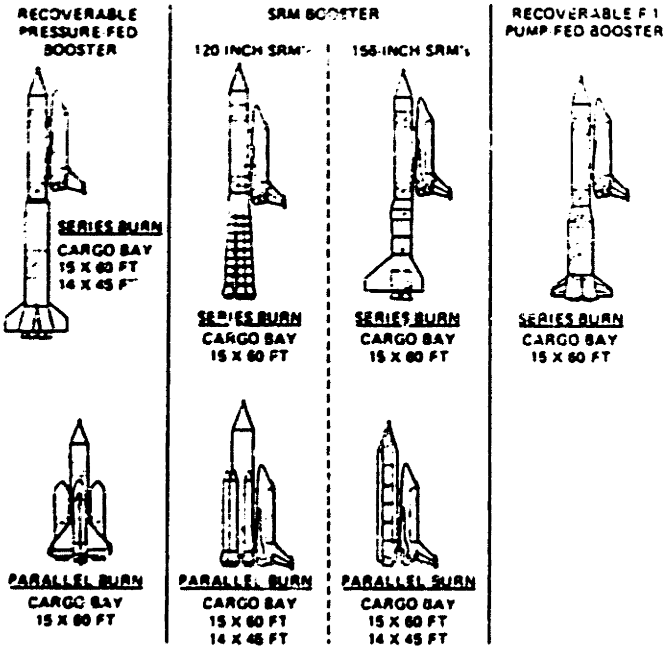

TAOS Options
Figure 9

attitude control requirements and cockpit sizing as a basis for contractor designs to start with (see Figure 10).

In late October, Mathematica sent its preliminary analysis to NASA Headquarters showing the cost effectiveness of some sort of thrust-assisted orbiter shuttle (TAOS) concept, but leaving the question of whether the boosters should be liquid or solid fueled open. While TAOS-like concepts were originally developed at Grumman/Boeing and McDonnell-Douglas, NAR drew up costing analyis for the different boosters and orbiter system by the end of 1971. NAR estimated the series burn, liquid pressure-fed system would cost $9.74 billion, require a peak funding of $0.94 billion and cost $8.1 million per launch. The solid parallel burn design came in at $5.5 billion with a launch cost of $10-12 million. In Figure 11, we can see a rough summary of the cost trends as the design process progressed. Large savings in development costs were traded off for increases in the cost per flight.

On 5 January 1972, President Nixon announced the decision to go ahead with the shuttle program with a full capability (i.e. 15x60 ft. bay, 65,000 lb. payload weight) orbiter. March 15 was set as the due date for a decision on the booster configuration to be used. In readiness for the Office of Manned Space Flight Review in February, NAR selected a pressure-fed liquid, series burn design and a solid, parallel burn design for closer analysis. The pressure-fed assembly was a 150 ft. long, 26 ft. diameter booster with seven engines at the base fueled with LOX/RP-1. Above this booster, in series, would be the 146 ft. long propellant tank for the orbiter, which was itself attached to the side of the tank. After staging, the booster would parachute to an ocean recovery while the orbiter continued its flight with fuel from its external tank. At liftoff, the total stack would stand 296 ft. tall, weigh 6.505 million lbs., and provide a thrust of 7.28 million lbs. (See Figure 12). The solid parallel-burn configuration used two 13 ft. diameter, 150 ft. high solid boosters with a 182.3 ft. tall propellant tank located between them. (See March 1972 design,

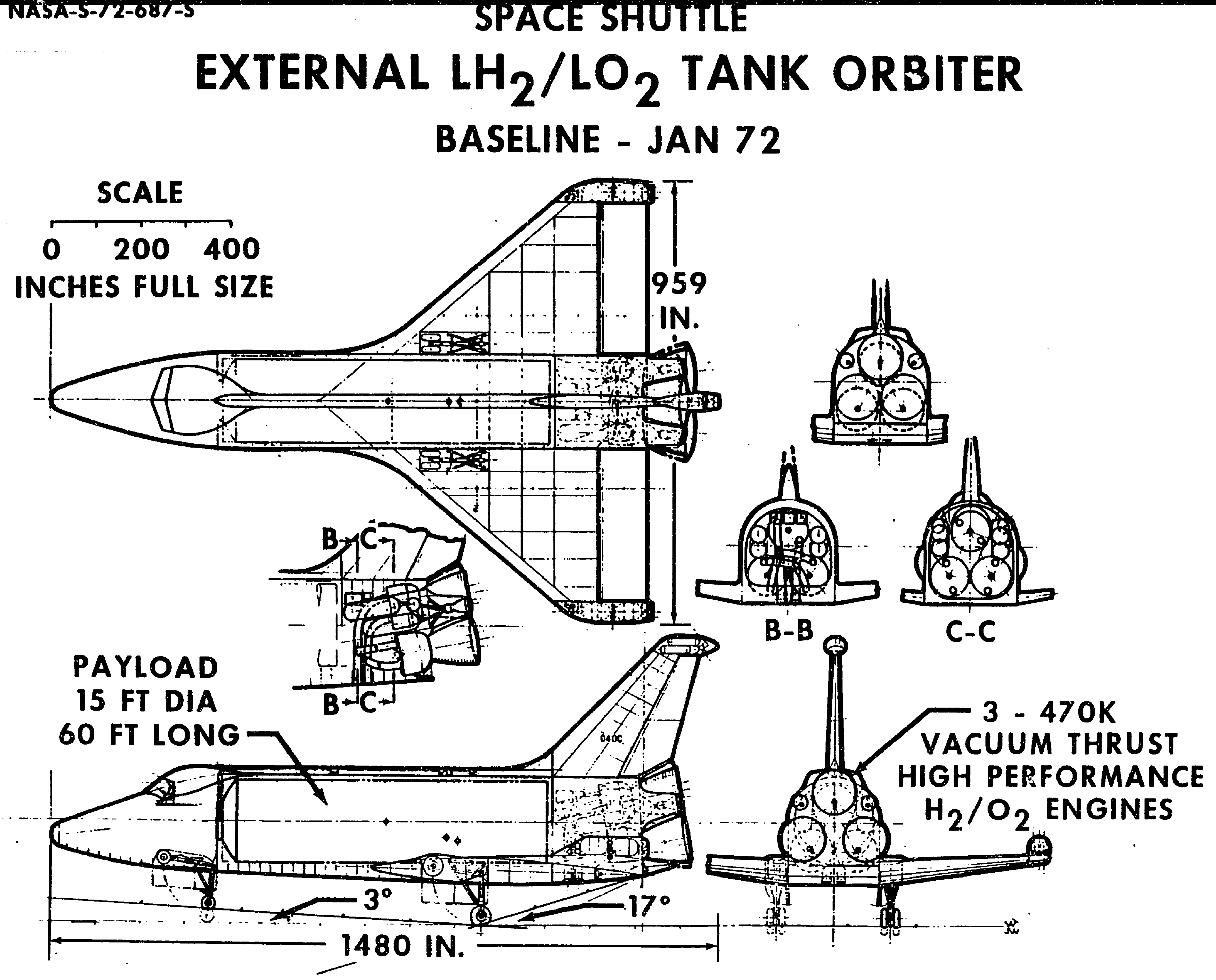

Figure 10
NASA-MSC 040A Orbiter

NASA-S-72-3421-S

# SPACE SHUTTLE COST COMPARISON

65,000 LB P/L - DUE EAST LAUNCH
15 FT DIA × 60 FT PAYLOAD BAY

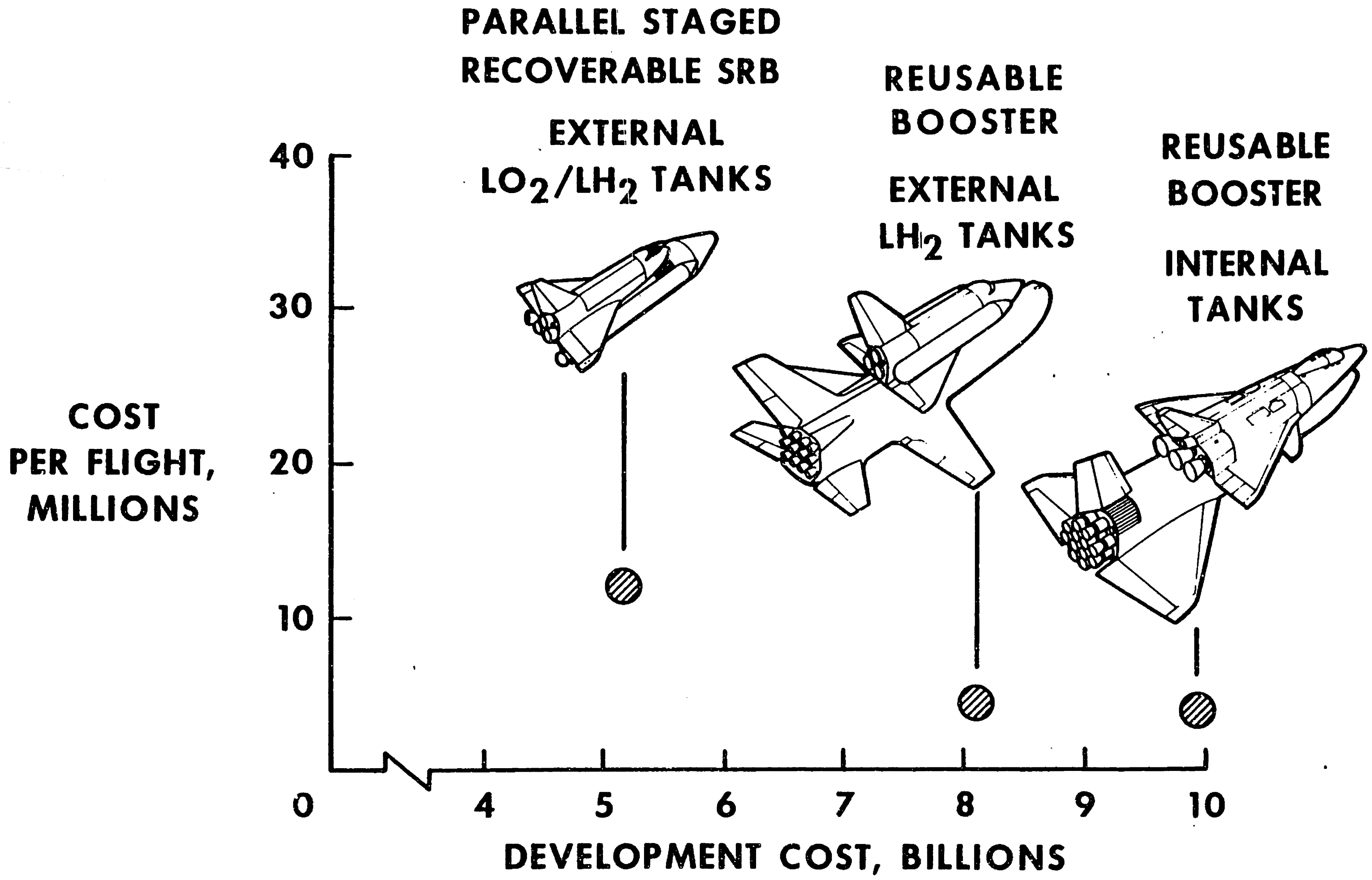

Figure 11

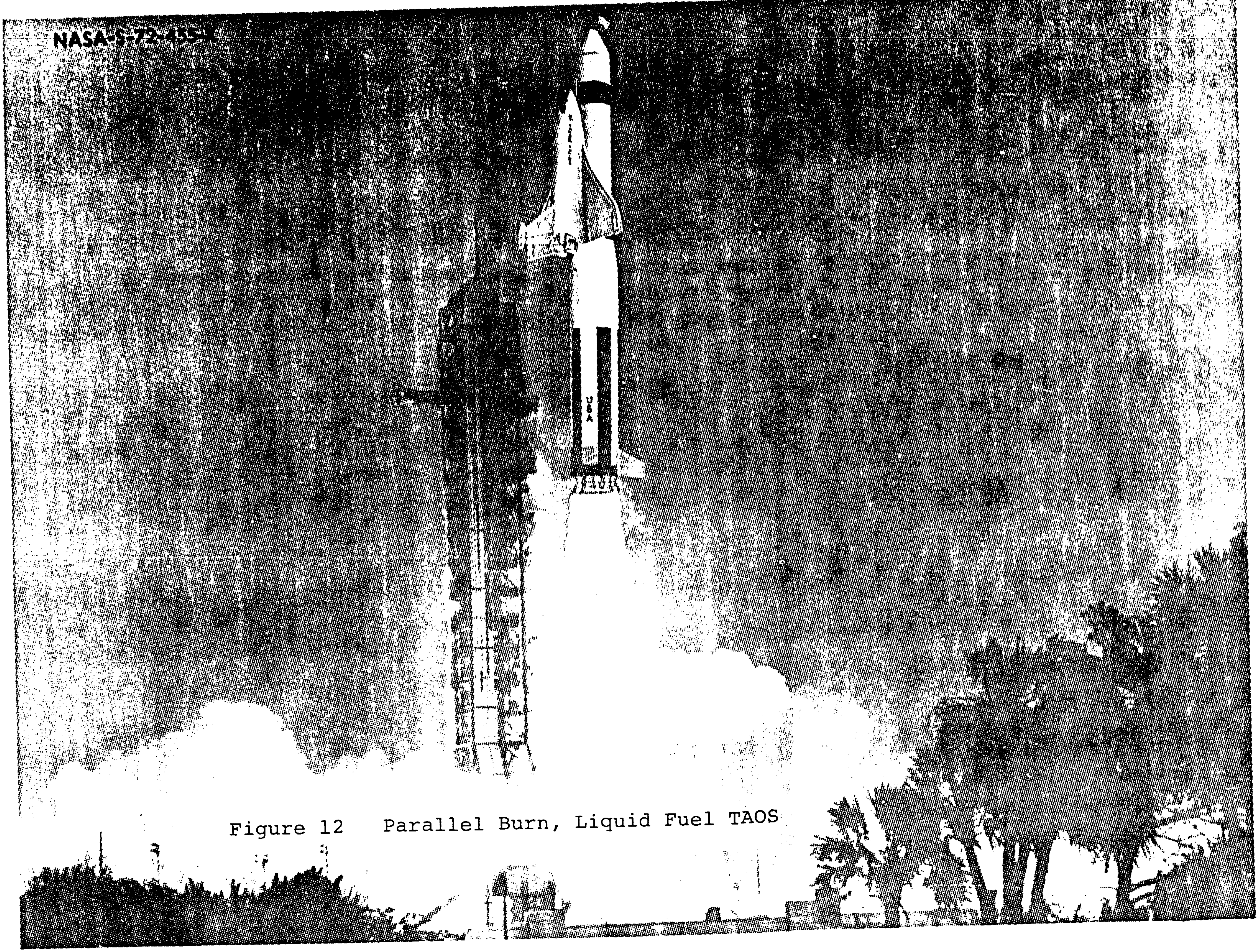

Figure 12 Parallel Burn, Liquid Fuel TAOS

Figure 15) The solid rocket motor (SRM) design achieved a staging velocity of 5,333 ft/sec versus 4,800 ft/sec for the pressure-fed booster. This relieved a fraction of the orbiter's load during ascent as opposed to the liquid option. After an extensive review within NASA and with OMB, NASA selected unmanned ballistic recoverable solid boosters in a parallel burn configuration. This gave the lowest development cost for the overall system ($5.15 billion), and the lowest technical risk of development. In addition, the TAOS-SRM design had the least capital risk per flight, as failing to recover a solid motor was less costly than failing to recover the more complex liquid fuel booster.

## Selection of the Prime Contractor

Two days after the March 15 decision, NASA releashed the Request for Proposal (RFP) on the orbiter development and system integration contract. Major components such as the SRMs, the external tank (ET), the shuttle main engines (SSMEs) and air-breathing engine systems (ABES) would be procurred by separate government contract and supplied to the prime contractor. Two months were allocated for preparing proposals, with two months for NASA to analyze them, leading to the beginning of negotiations with the prime contractor on 1 July 1972. Termed by trade journals as the "loosest" procurement document ever issued by the agency,[19] the intent of NASA to look for new innovations was apparent. The introduction to the RRP stated[20]

> "While the basic concept for the shuttle has been chosen, there are many important choices remaining to be made...There is strong interest in means to simplify, streamline, or otherwise attack development cost and/or operating cost with the objective of lowering one without significantly raising the other or impairing safety or performance."

Changes in the shuttle's specifications would occur even after the selection of the prime contractor with orbiter and integration responsibility.

The Source Evaluation Board for NASA, responsible for contractor selection, solicited eight companies for proposals. Twenty-nine others requested and received copies of the RFP. Four companies submitted proposals: Grumman Aerospace Corp., Lockheed Missiles and Space Co., McDonnell Douglas Corp., and North American Rockwell Corp. Space Division. North American and Grumman scored very high and close to each other in the final ranking of the proposals, followed by McDonnell Douglas and Lockheed. Between Grumman and NAR there was only a small differential in the scores of the technical evaluation, but the NAR proposal provided a lower credible cost and a more efficient management structure and was the final winner.[21] See Figure 13 and the May 1972 design in Figure 15. The cost for all the activity leading up to the development of hardware is covered in Figure 14. These figures do not include funds spent by companies on internal shuttle-related activity which were not reimbursed and thus represents a lower bound.

## Changes After Contractor Selection

The Authority to Proceed (ATP) baseline design of NAR went through several changes between September 1972 and January 1973 (see Figure 15). The ATP orbiter was sized for a 60x15 ft. cargo bay capable of carrying 65,000 lbs. into a due east 100 n.m. orbit with a crew of two. This vehicle was relatively stable in design by this time. The wings had a planform of 2,203 sq.ft. The 50° delta shape had a quasi-ogive profile with a 3.5° dihedral at the trailing edge. The rudder was split for speed brake use. The main propulsion system for the orbiter used three 470,000 lb. thrust engines mounted to a thrust structure in the aft section of the fuselage. Each of the engines operated at a chamber pressure of 3,000 psi compared with 980 and 780 psi respectively for the F-1 and J-2, the engines of the Saturn V. Each engine was throttleable over the range of 50-109% of design thrust allowing limitations to be imposed on accelerations and allowing high levels for abort.

| | |
|---|---|
| Overall length | 125.8 ft. |
| Wingspan | 84.0 ft. |
| Height to tail | 57.0 ft. (including landing gear) |
| Gross weight | 277,500 lb. |
| Dry weight | 170,000 lb. |
| Landing weight | 215,000 lb. |
| Designation | Orbiter (August 1972) |

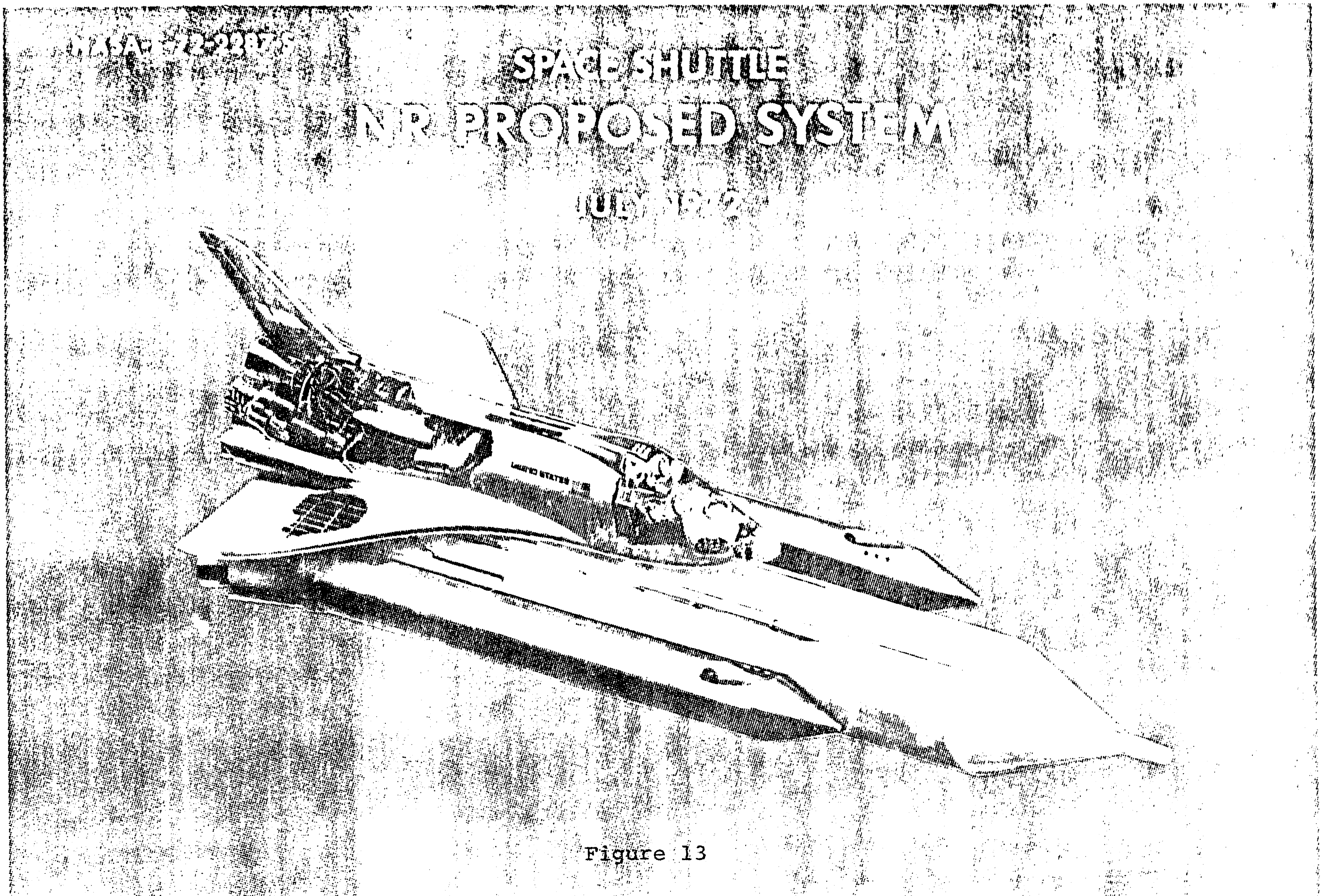
NASA-72-2387S
SPACE SHUTTLE
NR PROPOSED SYSTEM
JULY 1972
UNITED STATES

Figure 13

MAJOR SPACE SHUTTLE ENGINEERING STUDY CONTRACTS*

| CONTRACTOR | SCOPE OF STUDY | CUMULATIVE FUNDING (As of June 30, 1972) |
|---|---|---|
| McDonnell Douglas/ Martin Marietta | Vehicle Design and Development | $19.3 Million |
| North American Rockwell/ General Dynamics | Vehicle Design and Development | 19.3 |
| Grumman Aerospace/ Boeing Company | Vehicle Design and Development | 13.6 |
| Lockheed | Vehicle Design and Development | 4.5 |
| Chrysler | Recoverable Launch Booster | .750 |
| Chrysler | Pressure Fed Engine Booster | .865 |
| Mathematica | Economic Benefits | .645 |
| Aerojet General | High Pressure Engine (Orbiter) | 6.7 |
| Pratt and Whitney | High Pressure Engine (Orbiter) | 6.7 |
| Rocketdyne | High Pressure Engine (Orbiter) | 6.7 |
| Aerojet General | Pressure Fed Engine (Booster) | .450 |
| TRW Systems Group | Pressure Fed Engine (Booster) | .450 |
| United Technology Corporation | Solid Rocket Motor (Booster) | .150 |
| Aerojet | Solid Rocket Motor (Booster) | .150 |
| Lockheed | Solid Rocket Motor (Booster) | .150 |
| Thiokol | Solid Rocket Motor (Booster) | .150 |
| Aerospace Corporation | Operations and Payload Analysis | 3.6 |
| Lockheed | Payload Analysis | .599 |
| Parsons | Facilities Plan | .715 |

---

Figure 14
Government-funded Contracts Directly Related to the Phase A and B Design of the Space Shuttle
see footnote 20

## SHUTTLE SYSTEMS DESIGN EVOLUTION

## 1972 - 1973

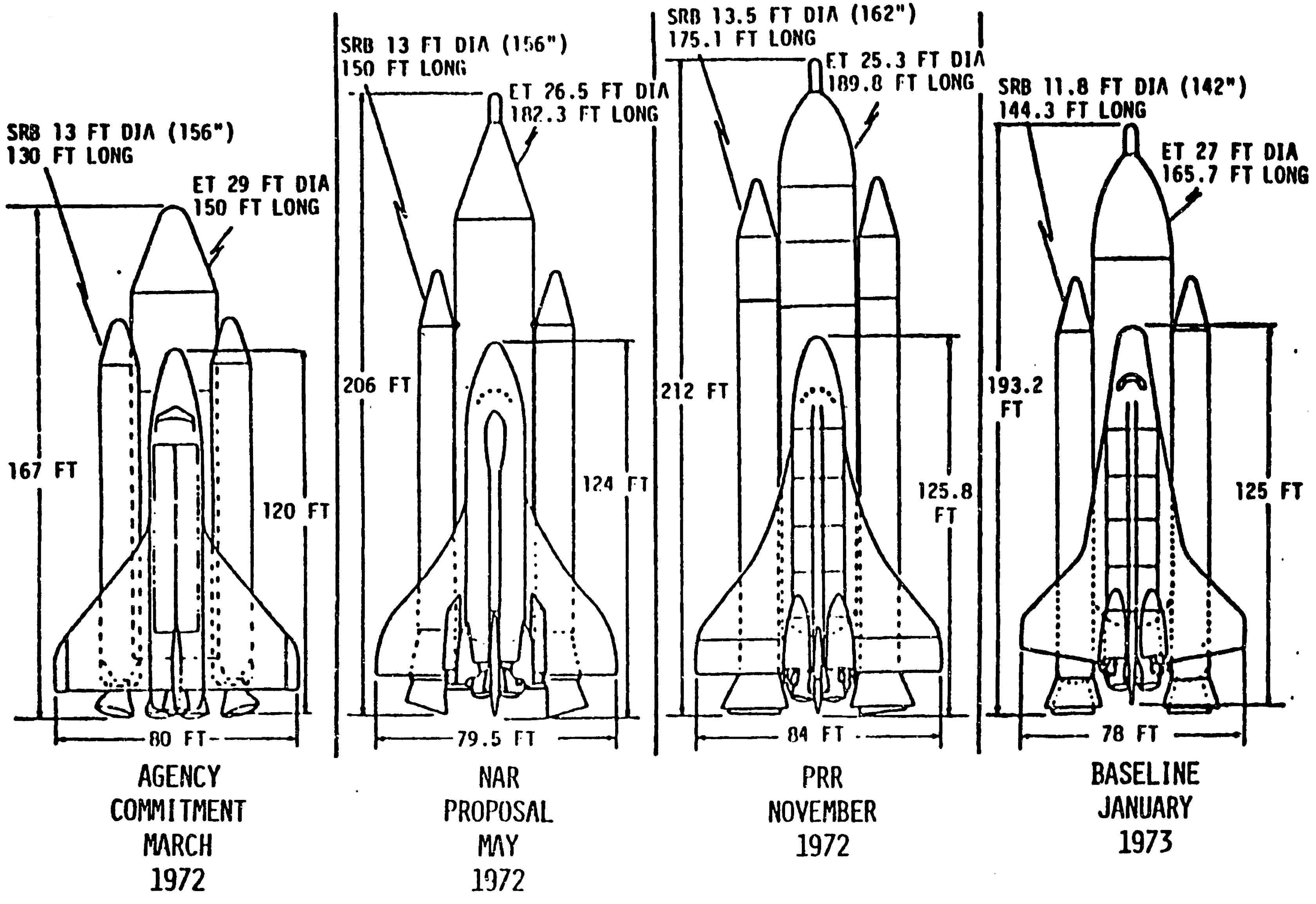

Figure 15

When NASA decided to adopt an external tank configuration for the shuttle, the orbiter became in large part a flying cargo tube about half its original size. The volume of propellant required for ascent dictated the size of the tank and constituted the largest shuttle element. Housing a fore LOX tank and a larger aft $LH_2$ tank, the external tank was 182 ft. long and 26.5 ft. in diameter. At launch, the total weight of the tank was 1.782 million lbs. with its propellant. All fluid controls and valves for the main propulsion system were carried within the orbiter to minimize the expendables. Only propellant feed lines, pressurization valves, and vent ports were located on the tank. The extreme nose of the tank was intended to have a small solid propellant motor for deorbiting the tank. It was subsequently decided to release the tank just before orbital velocity and thus dispense with the retrorocket.

When NASA opted for a parallel burn SRM, the contractors had not had time to appraise this concept in the same detail as applied to the adoption of the external tank and thus the exact size and capabilities of the SRMs were still in flux during the post-contract award negotiations. The proposed boosters of the August ATP design were 184.75 ft. long, 13 ft. in diameter and each producing 4.13 million lbs. of thrust at lift-off, reducing to 2.6 million lbs. after 40 seconds, constrained by the shape of the propellant grain. Avionics and related subsystems were clustered in the forward segment of the booster. After separation from the tank/orbiter configuration, parachutes were deployed for a sea recovery of the SRMs. The gross weight of two SRMs was 3.252 million lbs.

Summary of Weights and Thrusts:

| | |
|---|---|
| Orbiter weight | 277,500 lbs. |
| ET weight | 1,782,000 lbs. |
| SRM weight | 3,252,000 lbs. |
| Shuttle GLOW | 5.312 million lbs. |
| SSME thrust | 470,000 lbs. |
| SRM thrust | 8,260,000 lbs. |
| Lift-off thrust | 9.67 million lbs. |
| Designation | ATP baseline (August 1972) |

Staging for this design would occur at 130,312 ft. at a velocity of 4,035 ft/sec. At apogee, after the ET is jettisoned, two Orbital Maneuvering System (OMS) engines would inject the orbiter into a 100 n.m. orbit. The perigee would be raised only after a check of the vehicle systems had been made. The payload capability was sized for a 40,000 lb. delivery into a 100 n.m. polar orbit with a maneuver and orbital change capability dictating the sizing of the OMS and the amount of onboard fuel. The design also promised a 65,000 lb. delivery capability into a 100 n.m. 28.5° orbit. Removing the cargo bay design limit of a sustained 3g acceleration would permit a 74,000 lb. payload to orbit, with additional OMS propellant. (See Chapter 4).

The OMS engines would also provide the retrofire for deorbit. Entry would be at an incidence of 34° at 25,604 ft/sec with a L/D of 1.32. The orbiter provided either 1,085 n.m. cross-range or 4,700 n.m. downrange capability with a touchdown speed of 150 knots at a maximum incidence of 18°. Requiring a 10,000 ft. runway, unpowered landings would be standard from all orbital missions. The ABES would only be used for horizontal flight tests and ferry missions. (See Chapter 7).

By October, the ATP design had become the baseline for the Program Requirements Review (PRR) by NASA which established several design changes by the end of November 1972. The PRR resized the shuttle configuration in order to reduce total weight and ensure the specified payload capability could be met. The orbiter remained essentially unaltered, save for some minor sizing changes. The only major change was in the OMS where the engine thrust was raised to 6,000 lbs. for each unit. The ET was slimmed and lengthened, with dimensions of 25.3 ft. diameter and 189.8 ft. in length. This effectively lowered the launch weight of the ET to 1.732 million lbs. The solid boosters became shorter, with a length of 175.1 ft. and a diameter of 13.5 ft. Each unit provided a thrust of 3.9 million lbs., some 230,000 lbs. lower than the August design. (See Figure 15, the November 1972 design). After much deliberation, it was also decided to delete the two solid rocket abort motors that could have been used in the first 30 seconds of flight. This saved some 100,000 lbs. of weight and helped provide a new GLOW of 5.246 million lbs.

Detailed cost analysis in late 1972 by NASA and NAR showed that the existing shuttle configuration would exceed the cost-per-flight commitment of NASA due to its weight. New guidelines were issued to reduce the weight of the system, while maintaining basic capabilities and performance. In January 1973, NASA approved a lighter shuttle baseline that met the cost commitments with sufficient margin for vehicle growth as hardware productions proceeded. The configuration, while remaining the same in basic elements, had a 20% reduction in the GLOW, to 4.2 million lbs. (See Figure 15, January 1972 design).

To keep development costs to a minimum, guidelines for the orbiter vehicle stipulated standard aircraft-type materials and construction whereever possible. The orbiter would use conventional aluminum skin-and-stringer construction throughout except for the aft thrust structure where titanium/boron epoxy would reduce the fuselage weight (see Chapter 8). The ET was shortened and the 20,000 lb. reduction in the orbiter's dry weight allowed a resizing of the SRMs from 162 in. diameter to 142 in. and a shorter length. As of the first quarter of 1974, the ABES system was still being contemplated for use in horizontal flight testing and ferry missions. Plans called for using existing jet engines mounted in three twin engine pods. The feasibility of air-lifting the orbiter "piggy-back" on a C5-A or 747 aircraft was still under study.[23]

| | |
|---|---|
| Orbiter length | 125.0 ft. |
| Wingspan | 78.0 ft. |
| Dry weight | 150,000 lbs. |
| ET length | 165.7 ft. |
| ET diameter | 27.0 ft. |
| ET gross weight | 1.55 million lbs. |
| SRM length | 144.0 ft. |
| SRM diameter | 142 in. |
| Overall height | 193.2 ft. |

After several years of technical analysis, political debate, economic tradeoff and continual reappraisal, the shuttle program had arrived at the hardware development stage with a firm design and political commitment.For comparison, Figures 16

nd 17 show the shuttle design as it currently exists.
hile technical feasibility has been demonstrated, the more
undamental economic and operational capabilities of the shut-
le have yet to be brought about. A general summary of the
echnical evolution of the shuttle design is in Figure 18.
his flow is based on this chapter. The following chapters
xamine in more detail some of the major design tradeoffs
hat were made. The rationale for these choices rested on dif-
ering combinations of economic, technical and political ana-
ysis. Examination of these tradeoffs will provide furthur in-
ight into the design process.

## Current Shuttle Design

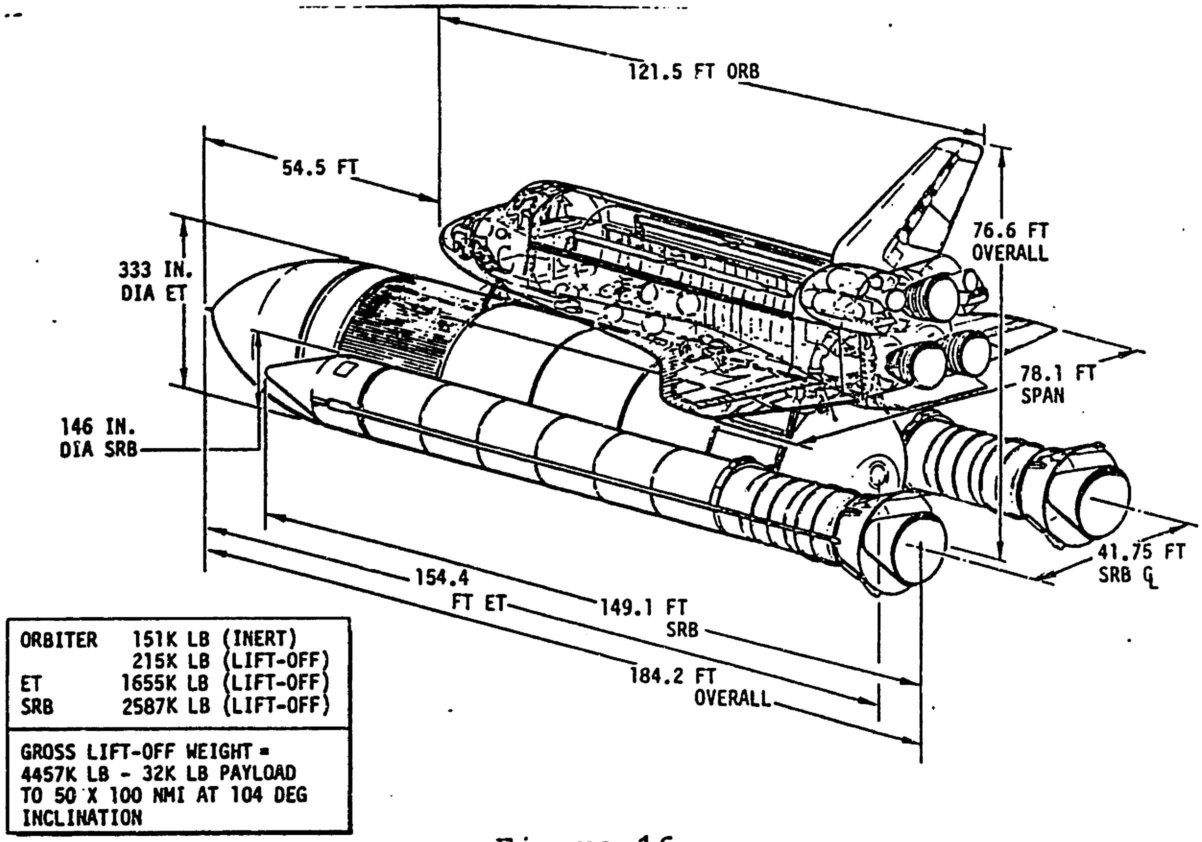

| | | |
|---|---|---|
| ORBITER | 151K LB | (INERT) |
| | 215K LB | (LIFT-OFF) |
| ET | 1655K LB | (LIFT-OFF) |
| SRB | 2587K LB | (LIFT-OFF) |

GROSS LIFT-OFF WEIGHT = 4457K LB - 32K LB PAYLOAD TO 50 X 100 NMI AT 104 DEG INCLINATION

Figure 16

| GEOMETRY | WING | VERTICAL STAB. |
|---|---|---|
| AREA | 2690 $FT^2$ | 413.25 $FT^2$ |
| ASPECT RATIO | 2.265 | 1.675 |
| AIRFOIL $Y_o$ 199 | 0010 MOD | WEDGE |
| SWEEP (LEADING EDGE) | 45 DEG | 45 DEG |
| (WING GLOVE) | 81 DEG | |
| M.A.C. | 474.81 IN. | 199.81 IN. |
| DIHEDRAL (TRAILING EDGE) | 3 DEG 30 MIN | |

CONTROL SURFACE AREA & MAX DEFLECTION

| | AREA | MAX DEFLECTION |
|---|---|---|
| ELEVON (ONE SIDE) | 206.57 $FT^2$ | -35 TO +20 DEG |
| RUDDER | 97.15 $FT^2$ | ±22.8 DEG |
| SPEED BRAKE | 97.15 $FT^2$ | 0 TO 87.2 DEG (TOTAL) |
| BODY FLAP | 135.75 $FT^2$ | -11.7 TO +22.55 DEG |

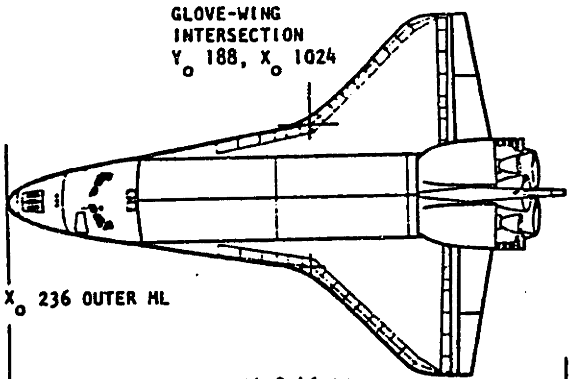

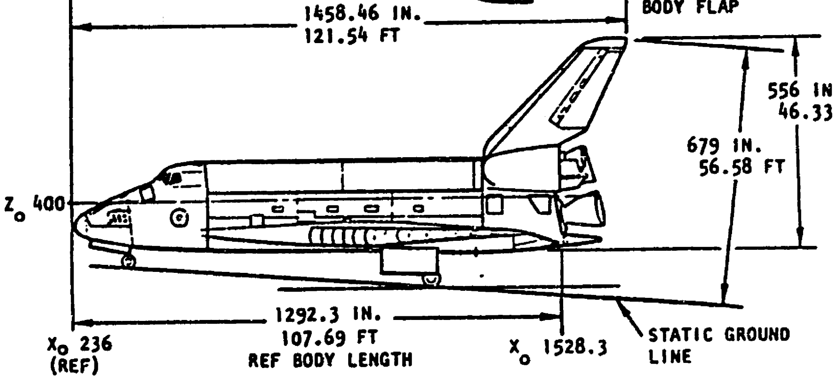

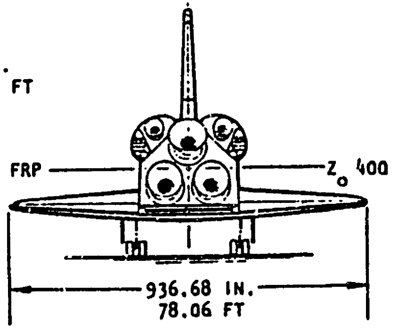

Figure 17

# Outline of Shuttle Technical Evolution
## 1969-1972

| | |
|---|---|
| Jan 69 | ILRV phase A contracts.<br>McDAC, LMSC, NAR, GD |
| Feb 70 | Phase B RFP issued.<br>Boeing-LMSC, McDAC-Martin, NAR bid. |
| Jul 70 | Phase B starts with McDAC and NAR<br>Alternate phase A contracts to Grumman-Boeing, LMSC and Chrysler Space Div. |
| Jul 71 | Phase B ends. Fully-reusable vehicle definition by NAR and McDAC. Funding constraints applied. Phase B' starts to get total and peak fiscal needs down. NAR, McDAC, LMSC, Grumman work with a baseline using external fuel tanks for the orbiter. |
| Oct 71 | Phase B" starts. Manned booster dropped. TAOS designs gain. Phased technology programs? |
| Nov 71 | Mark I/Mark II approach dropped along with mini-shuttle and glider concepts. |
| Dec 71 | Four TAOS concepts meet fiscal requirements: F-1 fly-back booster, Series liquid, SRM-TAOS, LPFB-TAOS. |
| Jan 72 | Nixon go-ahead for a TAOS shuttle configuration. |
| Mar 72 | SRM-TAOS chosen. |
| May 72 | RFP issued for phase C/D. NAR, LMSC, McDAC, Grumman bid. |
| Jul 72 | NAR proposal selected. |
| Aug 72 | ATP baseline design formed. |
| Nov 72 | PRR design the new baseline. Weight growth problems. |
| Jan 73 | Baseline of 'lightweight' design. Beginning of hardware development. |

A more detailed chronology of political as well as technical events is included in the appendices.

Figure 18

## Technical Evolution

1. Space Task Group Report to the President, September 1969
2. The Next Decade in Space, PSAC, March 1970
3. A.O. Tischler, "A Commentary on Low-Cost Space Transportation", Astronautics & Aeronautics August 1969
4. Memo from Joseph E. McGolrick to the Director LV and Propulsion Programs, NASA Headquarters, 2 December 1969
5. Summary Report of Recoverable versus Expendable Boosters, Space Shuttle Studies, Space Shuttle Task Group, 10 December 1969
6. Richard P. Hallion, The Antecedents of the Space Shuttle, 28 October 1979, unpublished manuscript
7. Curtis Peebles, "The Origins of the U.S. Space Shuttle", Spaceflight, Nov/Dec 1979
8. The Design Evolution of Reusable Space Transportation Vehicles, Robert A. Lynch, AIAA 70-265, Cocoa Beach, Florida February 4-6, 1970
9. NASA Space Shuttle Summary Report, 19 May 1969, NASA SSTG
10. Memo from George Low to J.D. Hodge, 5 August 1969, NASA-MSC
11. Memo from George Low to Dale Myers, 27 January 1970, NASA HQ
12. Ibid
13. David Baker, "Evolution of the Space Shuttle", Spaceflight, September 1973, p.266
14. David Baker, op cit, p.268
15. "Alternate Booster Evaluation Set", Aviation Week & Space Technology, 24 January 1972, p.37
16. Memo from George Low to James Fletcher et al, 18 August 1971, NASA HQ
17. USAF/NASA STS Committee minutes #10, 27 October 1971
18. C.J. Donlan, "Space Shuttle System Definition Evolution", 11 July 1972, internal memo NASA-MSC
19. "Shuttle RFP Stresses Innovation", Aviation Week & Space Technology, 27 March 1972, p.18

20. Space Shuttle Program Request for Proposal, 17 March 1972

21. "Selection of Contractor for Space Shuttle Program", an evaluation of the Source Evaluation Board on Space Shuttle by James Fletcher, George Low, James McCurdy. 18 September 1972, internal NASA HQ document, unpublished

22. United States Civilian Space Programs 1958-1978, Committee print of the House Committee on Science and Technology, 97th Congress, 1st session, January 1981, p.453

23. "Space Shuttle/The New Baseline", Astronautics & Aeronautics, M.S. Malkin, January 1974

## The Air Force and the Shuttle

"The Air Force's policy has been one of fly-before-buy."
-Robert Seamans, Secretary of
the Air Force

The purpose of this section is to introduce the military actors and concepts that influenced the shuttle design and decision. A full discussion of the role of the military in space policy and its relation to NASA is outside of the scope of this thesis. The material here is provided as a supplement to the foregoing chapters, which provide the basis for understanding the following chapters on particular shuttle design tradeoffs.

### Military Interest in the Shuttle

Department of Defense (DOD) interest in the shuttle can be seen as a logical extension of its interest in conducting operations in space. Utilization of space for defense purposes has emphasized the support missions of communications, navigation, meteorology, surveillance and early warning. The value of using military space systems derives from certain characteristics:

1)Uniqueness- some functions such as near real-time early warning of ballistic missile attack can only be done from space.
2)Economics- other functions such as long-range communications can be carried out more economically using satellites.
3)Effectiveness- meteorology depends critically on space observations.
4)Force enhancement- the increased intelligence and command/control capabilities brought by space operations leads to enhanced effectiveness for the terrestrial forces.

In 1970, the DOD spent about $1.7 billion for space programs, a considerable fraction comparable to NASA's efforts.[1] With this kind of effort, the appeal of a new Space Transportation System that offered more economical access to orbit with increased operational effectiveness (e.g. easing of payload weight and volume constraints, a payload return capability, quick reaction launches, etc.) was evident. The Air Force had been the DOD's executive agent for space operations through the 1960's and had worked closely with NASA on a variety of space programs.

The economic value of the shuttle to the Air Force was initially seen in the replacement of expendable launch vehicles (ELVs) with the reusable shuttle. Potentially, all ELVs save for the smallest (Scout class) could be replaced by the shuttle. Later studies would show a greater economic valu in reducing the costs of payloads using the shuttle, but the initial expectation was that the use of a single Space Transportation System would provide worthwile economies to space operations. Due to the high development costs, neither NASA n DOD could justify building the shuttle on the basis of its ow traffic demand projections, but their combined levels were hi enough to possibly justify a new vehicle. The DOD, through th Air Force, would be the largest single customer with 22% of t shuttle missions through the 1980's (on 1972 projections). Th usage would account for 34% of actual flights with some missi requiring more than one flight.[2] Presumably, all ELVs would b phased out within two or three years of initial shuttle operations.

Congress recognized the need to ensure the NASA shuttle was compatible with military needs. Representative Olin Teagu chairman of the influential House Science and Astronautics Co mittee's Subcommittee on Manned Space Flight, along with Senator Anderson, chairman of the Senate Aeronautical and Space S ences Committee, all pushed for broader design goals encompassing Air Force missions throughout the 1970 debates. The basi framework for formal coordination of DOD participation in the shuttle program was established through two groups. These wer the NASA/DOD Aeronautics and Astronautics Coordinating Board (AACB) and the Space Transportation System Committee.

## Organizational Actors

The AACB had served as the highest level formal policy coordinating mechanism between DOD and NASA in the areas of space and aeronautics since about 1965. As early as 1969, the AACB had considered plans for a NASA/DOD space transportation system. The kinds of issues that came under deliberation duri the conceptual design phase of the shuttle were: the progress of the NASA shuttle designs, DOD design requirements and their impact, and the interrelationships of the current family of ELVs, their growth versions and the shuttle.

The AACB was primarily concerned with policy and particularly with issues affecting the DOD's Defense Development Research & Engineering (DDRE) section. Its activities were wholly separate of the working level of design detail and compromise handled through the joint NASA/AF STS Committee. Signed into being in a 17 February 1970 agreement between NASA administrator Thomas Paine and the Secretary of the Air Force Robert Seamans, the committee consisted of four members from each agency.[3] Co-chaired by Grant Hansen, assistant secretary of the Air Force for research and development, and Dale Myers, NASA associate administrator for manned spaceflight, the committee had a broad mandate to review shuttle operational plans, technology requirements, program objectives, and development plans in order to insure both NASA and DOD needs were met. Since NASA was the executive agent for the shuttle, the primary task of the Air Force as the DOD's agent was to coordinate Air Force activities. Such activities included technology development programs in rocket engines and re-entry heating to contribute to NASA's efforts and most importantly to establish performance criteria to influence the final design for DOD's needs. The STS Committee was the sole point of organizational contact for the shuttle through the early 1970's. While several members of the DOD DDRE expressed interest in working on the shuttle program, they were blocked by the Air Force Secretary's Office. It was felt that DDRE participation would be unnecessarily complicating and not productive in the early conceptual design of the shuttle.[4] Later, after the hardware development of the shuttle was far underway, the STS Committee's functions were essentially absorbed into the AACB. The future of the Committee with the transition to routine shuttle operations is unclear.

Headquarters USAF established policy to direct Air Force involvement in the shuttle. Coordination of all related activity within the Air Staff was the responsibility of the Directorate of Space DCS/R&D under General Walter Hendrick. This Directorate maintained the detailed understanding of the status of shuttle planning efforts, coordinated supporting R&D activity and insured that military requirements were communicated to NASA via the STS Committee or informal channels. The Director of Space or his designate served as a member of the STS Committee. Outside of the Air Staff, a variety of other Air Force organizations participated in STS activities. In Headquarters Air Force Systems Command these activities were coordinated by an STS office under the DCS/Development Plans. Field activities at the various NASA centers were coordinated by the Development Planning Office of the Space and Missile Systems Organization (SAMSO), now called Space Division. Air Force members participated in the numerous technical and technology planning panels established by NASA. The Air Force participated in reviews of the various phases of the shuttle's definition and in the evaluation of contractor's responses to NASA requests for proposals on shuttle work.

Of central importance to Air Force interests was the then-classified National Reconnaissance Office. A part of the Department of the Air Force, the NRO operates the reconnaissance satellites for the entire U.S. intelligence community. During the first Nixon Administration, the head of the NRO was assistant secretary of the Air Force John McLucas. With DOD providing the funds, policy on allocating the money was shaped by the Executive Committee for Reconnaissance- consisting of the Assistant Secretary of Defense for Intelligence, the Director of CIA, and the President's Assistant for National Security. As will be discussed later, the missions to be flown with reconnaissance satellites and the needs of such payloads had a major impact on the design requirements for the shuttle. The requirements for intelligence missions using space were formulated within NRO. SAMSO provided advice on the technical requirements for getting into space through the expertise of the Aerospace Corporation, a non-profit R&D house for the Air Force in El Segundo, California. The NRO was not directly represented on the STS

Committee due to its classification.

## The STS Committee

As a formal committee, the STS group most effectively served as an indicator of the official status of the shuttle program with a means for both the Air Force and NASA to establish a common record of the shuttle's development. Records of the meetings show the participants were extensively prepared with several briefings per meeting. Although the Committee met about once or twice a month during 1970 and 1971 during the period of heaviest shuttle design changes, the co-chairman of the Committee claimed that "in reality, informal mechanisms were more important in getting things decided...Particularly during the last months of 1971, when questions came up that affected the Air Force, Dale (Myers) would call me and I in turn would pass along the queries to Sam Phillips out at SAMSO."[5] (Lt.Gen. Sam Phillips was the head of SAMSO at that time). NASA and the Air Force would have differences, but they recognized the need for cooperation quite early. Dale Myers' predecessor at NASA, George Mueller, had begun meetings with Air Force representatives such as Grant Hansen and General Hendrick in the spring of 1969 at his home in Georgetown, Washington, D.C.[4] Through informal channels such as these, NASA and its contractors were aware of Air Force desires before they became fully defined. Considering that all of the companies interested in the shuttle had extensive Air Force contracting experience as well, knowledge of Air Force interests was not hard to come by.

The actual number of Air Force personnel directly concerned with shuttle in the 1969-1971 period was quite small. The bulk of work for the Air Force on the STS Committee was handled by Grant Hansen with the assistance of Don Dooley at Aerospace Corp. Concerns about aircraft and current intelligence missions dominated the attention of persons such as John Mclucas and Robert Seamans which translated into only minimal support for space-related issues for a vehicle several years away from flying. The rest of the Air Force was pretty much left out of the debate.[4] Thus there was not a task of "converting" the

Air Force to supporting the shuttle. The general opinion of the Air Force (aside from some space-oriented officers at SAMSO) was that if NASA developed something they could use, then they would use it. If not, continued development of ELVs could meet Air Force needs for space access in the future.

## Air Force Support

While there were differences between NASA and the Air Force, the policy that a vehicle for joint use was not challenged after system definition got underway. Both sides realized each needed the other to justify the STS and NASA, in its battles with Congress and the OMB, particularly needed Air Force support. In Congressional testimony in 1971, John Foster, Director of Defense Research and Engineering; Robert Seamans, Secretary of the Air Force; and General John Ryan, Air Force Chief of Staff, all testified in favor of the new shuttle system.

Planning for a joint shuttle and space station program had begun in 1969, coinciding with the cancellation of the Air Force's Manned Orbital Laboratory program (after an expenditure of $1.4 billion). Over the next two years, the DOD, through the Air Force, spent about $6 million on shuttle studies and for 1972 requested an additional $4.2 million.[6] These studies were primarily for analyzing the military applications and mission capabilities of the shuttle. While the DOD planned to pay for building a military shuttle base at Vandenberg AFB in California and to pay the operating cost of defense missions, it refused to help fund development costs from its own budget.

While the Air Force publicly supported the idea of a space shuttle, it did not come forward with money to help the program directly. Critics of the shuttle program within Congress and the OMB argued that if there was a military need for this new vehicle, the DOD should support at least part of its development. The military consistently refused to do this for essentially two reasons. One was that joint administration and funding of large-scale projects like the shuttle was inefficient and would lead to delays. The second was the Air Force attitude that the shuttle was not a program that they needed immediately. Although claiming the shuttle would enhance defense capabilities for the 1980's, the Air Force's first priority for the 1970's was the upgrading of conventional air defense with the development of the B-1 and F-15. Grant Hansen has commented that "When Bob Seamans brought me in, I thought the role of space would be enhanced as that is what I was interested in. Instead I spent much of my time worrying about airplane problems.".[4] In addition, the Air Force felt it was already making a contribution to the shuttle. They were committed to about $500 million (1972 dollars) for upgrading Vandenberg and possible procurement of its own fleet of shuttle vehicles. The Air Force was also in the process of taking over the development of a reusable space tug, at a cost of $600-800 million for the 1970's. This tug would deliver payloads from the low orbits achievable by shuttle to higher altitudes and even geosynchronous orbits. This was an important capability as over 50% of the military payloads then planned for required orbits higher than the shuttle's low earth operating orbit.[2]

A heavier commitment to the shuttle would not have been consistent with Air Force policy. There was the policy of "fly-before-buy" which required an operational test vehicle before the commitment to its full development and use. While this policy was glossed over on many aircraft development programs, the Air Force had been burned in two previous manned space ventures, Dyna-Soar and MOL, which were cancelled after considerable Air Force money had been spent. The Air Force intended to enforce a "fly-before-buy" policy with the shuttle.

In addition, some segments of the national security apparatus were only lukewarm about the shuttle. The military space program does not receive the scrutiny that NASA's space effort does, nor even the attention that a major weapons program such as F-15 and B-1 had. Public discussion is limited by by the classification of the majority of military payloads, which prevents a full analysis of the economic tradeoffs involved with making a transition from ELVs to the shuttle. In its analysis of the shuttle's economic value, Mathematica cited the classification of DOD payloads as a complicating factor of "the first magnitude" as it prevented the certain generation of alternative traffic model projections. The ambivalence that greeted the shuttle proposal by some parts of the military and intelligence communities stemmed not from a differing projection of space traffic demand, but from an insensitivity to economic pressures that made the shuttle attractive to other potential users. The crucial importance of reconnaissance and military communications meant that little difficulty was met in obtaining funds year after year. A large and versatile family of boosters and spacecraft had been developed since the 1950's which had been very successful. So the argument ran that even if apparent economies could be made by shifting to the shuttle, it would require changing to an untried system of lower cost spacecraft and standardized subsystems which might compromise mission objectives. If shuttle did not work out as claimed, backup boosters would be needed, but due to lower production rates, the per unit costs would probably rise thus making a system using both shuttle and ELVs more expensive than a shuttle only or an ELV only system. The military would not give up its proven vehicles until the shuttle had been throughly tested and was operational. Many groups in the Air Force were tied to the Titan III vehicle and its success. SAMSO and the Aerospace Corp. included many individuals who had made ELVs their carreer. The NRO was concerned with quick-launch capabilities and getting their payloads on-station in a crises. The defense intelligence groups were concerned about security for control of the shuttle during military missions. Thus many potential military users welcomed the shuttle only if NASA would pay for it, then configure it so the military could use it when need be, and finally if the Air Force and intelliegence community did not have to adopt a new operational philosophy to use the STS. As a vote of some confidence in the NASA shuttle, however, the Air Force dropped the development of new ELVs and the production of new versions of the Titan III. Otherwise Congress could point to such continuing work as proof that the

Air Force did not believe its own testimony. Contractual commitments were planned so that an ELV backup capability would extend for two years after shuttle operations commenced at VAFB. Furthurmore, the Air Force continued its lifting body work at Edwards Flight Research Center on the X24-B at NASA's request to gain data for the shuttle's aerodynamics. Air Force support for the shuttle consisted of supportive testimony, funding for some military-unique programs with the shuttle, continuation of some technology development programs that had shuttle application and cancellation of further improvements in ELVs as a vote of confidence. Considering this and the other pressing problems occupying Air Force attention at the time, it is not surprising that funding for the shuttle's development was not made by the DOD.

The role of the Air Force in some of the specific design tradeoffs that the shuttle underwent are discussed in the following five sections; each one dealing with a particular technical aspect that was resolved in the conceptual design phase. The Air Force consistently opposed phased development plans whereby a smaller or less techncially sophisticated vehicle was built first with later transition to a full capability design. Noting the technology requirements for the shuttle were severe, a separate technology program to lower the development risk of the orbiter (concentrating on thermal protection, $LH_2$/LOX engines and avionics) was proposed by Robert Seamans. NASA rejected this due to the additional costs involved and the lack of a role for Marshall Spaceflight Center and the Manned Spacecraft Center before vehicle development began. The NASA proposal that a MarkI/II approach be tried was dropped as well. Noting the tendency of early space vehicles to be undersized by the time they became operational, necessitating furthur efforts to increase their capability, the Air Force saw phased vehicle development as uneconomic. As the secretariat for the Air Force on the STS Committee, Lt.Col. Don Steelman, noted "The Air Force is interested in system efficiency in terms of payload factors and operational aspects and does not propose a vehicle larger than necessary."[7] Mr. Steelman is currently the Washington, D.C. representative for Rockwell International.

## The Air Force and the Shuttle

1. Steelman, Lt.Col. Donald, "The Air Force and the Space Transportation System", Air University Review, Jan-Feb 1971, p.35
2. U.S. House of Representatives, United States Civilian Space Programs 1958-1978, January 1981, committee print prepared for the Subcommittee on Space Science and Applications of the Committee on Science and Technology, p.567
3. Agreement between NASA and the Department of the Air Force, done February 17, 1970. NMI 1052.130 with Attachment A
4. Interview with Grant Hansen, SDC Corp., 11 March 1982
5. Barfield, Claude E., "NASA Stakes Funds, Future on Reusable Space Vehicle", National Journal, 13 March 1971, p.542
6. Barfield, Claude E., "NASA Broadens Defense of Space Shuttle to Counter Critic's Attacks", National Journal, 19 August 1972, p.542
7. Steelman, op cit, p.39

## Payload Size and Weight Capability

> "Systems Analysis is a reasonable guide, but it shouldn't be taken all that seriously."
> -James Fletcher, NASA HQ

One of the first design questions to be asked in building a new aerospace vehicle is how big it is to be. This leads directly to asking the size and weight of the payloads expected to be carried. Considerations of the maximum payload size and weight were among the first issues to be addressed in the system design of the shuttle and were still debated until the final go-ahead was given by President Nixon on January 5, 1972.

In the PSAC report to the Space Task Group in September 1969, the panel concluded[1]

> "The optimum payload dimensions and weight are not yet well established. From an engineering point of view, heating problems are likely to be more severe if the system is designed too small. For payloads in the range of 10,000-50,000 pounds in a low polar orbit, the joint NASA-DOD studies suggest that the development cost is not expected to be strongly dependent on size."

The kinds of missions envisioned were the delivery and return to low earth orbit of both passengers and general science and applications payloads, modular sections of future space stations and replacement of the Titan IIID for low earth orbit military payloads. Payloads needing to go to higher altitudes would be taken up aboard the shuttle and then boosted onward by use of a space tug that could also be carried aboard the shuttle. The provision for modular assembly of payloads in earth orbit would eliminate the need for the larger single payload capability of the Saturn V.

At a briefing for potential space shuttle contractors on May 6, 1979 while the studies of the Space Task Group were still going on, George Mueller discussed sizing questions. As the head of NASA's Office of Manned Space Flight, Mueller and the other NASA planners saw space station support as one of the major missions of the shuttle.

A design goal of 50,000 pounds was desirable to minimize the number of station resupply flights needed per year.[2] Some of the contractors had looked at what the maximum diameter a shuttle orbiter might be and came up with 22 ft., the dimension of an S-IVB stage on the Saturn V. It was thought that if a space station would be built in modules, it would be desirable to carry a complete module into orbit at one time. The lengths of individual segments could be varied to suit the length of the cargo bay, but 22 ft. seemed a maximum diameter. A S-IVB stage was eventually used to form Skylab, but most planning for space station modules estimated more modest diameters, usually about 15 ft. This value was chosen as suitable for a minimum outside diameter. Any smaller diameter, after wall shielding, cabling and equipment was added, was considered unacceptably cramped. Initial guesses as to total volume required for a station module (considered among the largest payloads to be sent up) was about 10,000 cu. ft.

The report of the NASA Space Shuttle Task Group in June 1969 did not specify any volume requirements among its list of desired system characteristics.[3] 50,000 pounds of cargo to orbit with the same weight capability on return was specified, while noting that this was for a 270 n.m. orbit at a 55° inclination (the reference orbit for space station studies). The number 50,000 pounds was often used without specifying what orbits this was good for, which of course is crucial. 50,000 pounds to polar orbit is a much more difficult thing to do than 50,000 pounds in a due east orbit and the higher the orbit the greater the difficulty. A "typical" cargo bay was sized at 15 ft. in diameter and 60 ft. in length. Although debate would continue for the next two years, these dimensions would eventually be adopted. The NASA groups working on space station design eventually adopted constraints of 14 ft. diameter and 58 ft. in length in 1970, but their design requirements had already been overshadowed by Air Force needs by that time.[4]

The first launch of a new fourth generation of reconnaissance satellites was made on June 15, 1970. This launch showed the kind of payload the DOD was most interested in carrying. Unofficially called "Big Bird", the satellite weighed more than 20,000 pounds, which made it heavier than any previous observation satellite. The spacecraft used a modified Agena 10 ft. in diameter and 50 ft. long, including the payload, and launched by a Titan IIID booster. With about 20,000 pounds of useful payload, the total weight was greater than 25,000 pounds due to the weight of the Agena. All of this was within the capability of the Titan IIID, which could put over 29,000 pounds into equatorial orbit and a bit less than that into polar orbit (as with Big Bird). Joining the separate functions of area surveillance and close-look photography into one satellite was responsible for the increased size and weight of this new system.[5] Increasing the length of the satellite made possible increases in the focal length of the camera, which when combined with increases in the camera aperture provided a new level of ground resolution. According to some reports, current Big Birds are at the 60 ft. limit, or even slightly beyond if including the apogee motor. The weight in polar orbit has been estimated at slightly over 30,000 pounds. It is for these kinds of payloads that the DOD saw its most frequent use of the shuttle, as the satellite's orbits decay after a time and new ones must be sent up periodically.

In early 1969 during the work of the Space Shuttle Task Group, George Mueller had several meetings with Mike Yarymovych, then deputy assistant secretary of the Air Force. While Secretary of the Air Force Robert Seamans dealt with policy within the executive branch and with the

NASA administrator, it was Yarymovych who initially carried the daily technical details of Air Force requirements for shuttle within the Secretary's office. John McLucas of the NRO advised the Office of the Secretary of Defense (OSD) through Seamans while Grant Hansen carried on the liaison work with NASA through the STS Committee. It was through Yarymovych and Mueller that NASA made its initial deal with the Air Force. As Yarymovych noted in an interview[7]

> "NASA needed Air Force support, both for payloads and in Congress. I told Mueller we'd support the shuttle, but only if he gave us the big payload bay and the cross-range capability, so we could return to Vandenburg after a single orbit. Mueller knew this would mean changing Max Faget's beloved straight-wing design into a delta wing, but he had no choice. He agreed."

The requirements of a 15x60 ft. payload bay and a 1500 n.m. crossrange capability were sent to the Space Task Group study and then into NASA's phase A shuttle studies, which had been released in January 1969. Initial evaluation of possible shuttle designs looked at payload weights between 25,000 and 65,000 pounds, with the former being a NASA lower limit and the latter a requirement desired by the Air Force. The 25,000 pound capacity did not give the Air Force enough weight capability for geosynchronous orbit. Its adoption would have meant the Air Force would need to procure a new generation of expendable boosters. Payload diameters were either 15 or 22 ft. at a variety of lengths, with 60 ft. the usual baseline. When the contracts for phase A studies of alternate shuttle designs were released in June 1970, the cargo bay was to be sized for a clear volume of 15x60 ft., while having a capability for 65,000 pounds into a 100 n.m. circular orbit due east with air-breathing engines removed from the orbiter.

In a presentation to the NASA/USAF STS Committee on June 29, 1970, the Air Force discussed DOD payload size and weight requirements. Data was presented on the size and weight of current payloads and from this baseline, sizes and weights for projected missions were estimated for the next eight to ten years. DOD payloads were discussed in showing the growth history of payload fairings and launch vehicle lift capability. The presentation revealed that present DOD missions required payloads of 60 ft. length and 10 ft. diameter with an equivalent weight of 30,000 pounds in low earth polar orbit. The diameters were currently restricted by the diameter of the Agena upper stage, causing some complication in the design with attendant packaging and reliability costs. The need for improved capability for DOD payloads indicated the need for larger diameters and greater payload weight capability. Drivers of the designs were the desire for increased power and lifetimes for the payloads, while minimizing the cost of the design changes. Enhanced capabilities meant weight increases while loosening of the diameter constraint meant lower packaging costs for the new payload. Based on payload growths predicted for the 1980's, an equivalent payload weight capability of 40,000 to 50,000 pounds into low earth polar orbit was required. A 60-ft. payload bay was necessary for current and projected missions with a 15-ft. diameter needed for missions going beyond low earth orbit. This diameter represented early thinking on the size of a third stage or space tug for payloads going to high altitudes or synchronous orbits if the 60-ft. length was to be maintained. NASA had looked at larger vehicles, but had found them unattractive due to high peak funding requirements. The Air Force emphasized that if a shuttle with a reduced payload capability was developed, then an inventory of expendable launch vehicles had to be maintained, reducing the economic attractiveness of the shuttle. The DOD at that time had not taken a detailed look at upgrading its current ELV's, as the shuttle was slated to replace them by the 1980's.

NASA had placed a deadline of October 1970 for an understanding of the shuttle sizing in terms of payload size and weight requirements, so that effort could proceed on the phase B definition studies of the shuttle main engine contracts. In August, NASA decided that specified limitations on gross lift-off weight (GLOW) might result in system designs that were overly sophisticated to meet what might be an artificial constraint.[9] The GLOW baseline was changed to a trade-off variable and a baseline payload weight established as an approach to driving for lower costs on the shuttle. At a meeting of the STS Committee on October 2, 1970, NASA announced that it would be retaining the 15x60 ft. cargo bay size as the baseline for the phase B studies. The Air Force emphasized that their needs still supported a 40,000 pound capability into a 100 n.m. polar orbit. NASA responded by noting that the current baseline of 25,000 pounds to the reference orbit ($55^{\circ}$ x 270 n.m.) was with air-breathing engines (to be used after reentry) and that by removing the engines a heavier payload capability of about 40,000 pounds was achievable. While concerned with the operational and safety considerations of deleting the air-breathing engines, the Air Force accepted NASA assurances that the engines would be used on the early flight tests (see Chapter 7).

Some designers were not sold on the need for a 15-ft. diameter payload bay. Growth trends in DOD payloads did not all point to increases in payload diameter as much as in payload length. NASA advanced planners had almost no payloads larger than 12 ft. in diameter at the time, save for space station modules; and that project looked almost dead by this time. In a memo to the deputy director at Manned Spacecraft Center, Max Faget raised the question of items for the agenda of the next STS Committee meeting and stated[10]

> "The USAF appears not to be nearly as firm on the 15 ft. diameter requirements as they are on length. NASA has no need for 15 ft diameter either. It is suggested that you attempt to have the payload diameter reduced to 12 ft."

Three days after this memo, the deputy director received a response from the STS Committee's Air Force technical aide which read[11]

> "The USAF fully supports and stands firm on the present Level I requirement for a payload diameter of 15 feet and a length of 60 feet."

Level I is a reference to the degree of authorization necessary to create a change in a particular baseline design requirement. In a memo from NASA Administrator Fletcher to his deputy George Low about a meeting with Dave Packard, the DOD director of research and engineering, Fletcher recounted assuring Packard that the diameter requirement came primarily from NASA with the length coming mainly from DOD.[12] This was apparently in reference to the Big Bird program and the NASA sizing of space station modules, which would require a 15-ft. diameter.

At the meeting of NASA, Air Force and contractor personnel on January 19-20, 1971, a series of baseline design decisions were formally adopted and then communicated to the contractors on the phase B definition studies and phase A alternate studies. As expected, the cylindrical cargo bay was sized at 15x60 ft. with a payload capability of 65,000 pounds in a due east orbit and 40,000 pounds into a polar orbit. Also adopted was the requirement for a high cross-range orbiter, with a capability of changing its return ground track by 1100 n.m. to either side of the nominal path (see the next chapter for a further discussion of this).

Adoption of baseline design requirements did not mean an end to discussions of the size of the vehicle, even this late in the definition studies. The following charts are from contractor briefings to the Manned Spacecraft Center On August 26, 1971. The conclusions showed that a major

# CONTRACTOR RECOMMENDATIONS

**GAC** - RETAIN 15x60

IF THERE IS TO BE A SMALL ORBITER, IT SHOULD BE 15x40 NOT 12x40

TOTAL PROGRAM COST DELTA $190M
PEAK FUNDING DELTA $ 60M

**LMSC** - USE 15x60

ALTERS DELTA BODY SHAPE (NOT SCALEABLE)

TOTAL PROGRAM COST DELTA $264M
PEAK FUNDING DELTA $ 26M

**NR** - PHASED DEVELOPMENT PROGRAM - 15x40 (2) 15x60 (3)

STRETCH OF DELTA NOT PRACTICAL

TOTAL PROGRAM COST DELTA $200M
PEAK FUNDING DELTA $ 10M

**MDC** - RETAIN DIRECT 15x60 APPROACH

STRETCH OF DELTA NOT PRACTICAL

TOTAL PROGRAM COST DELTA $192M
PEAK FUNDING DELTA $ 25M

Note: GAC- Grumman Aerospace Corp. LMSC- Lockheed Missiles and Space Corp.
NR- North American Rockwell MDC- McDonnell Douglas Corp.

# ORBITER PAYLOAD PACKAGING REQUIREMENTS

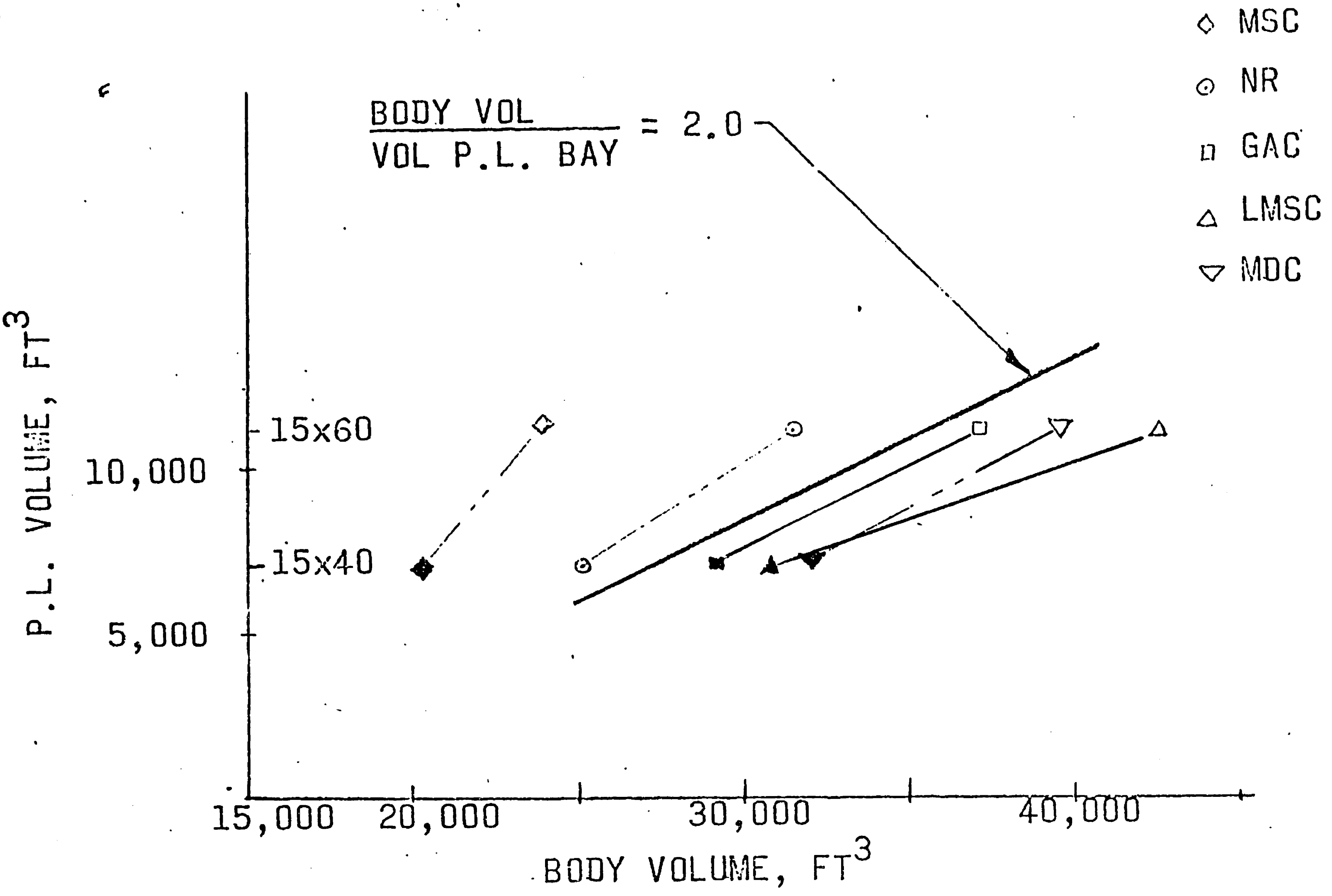

Note: MSC- Manned Spacecraft Center

# EFFECT OF BODY VOLUME ON WEIGHT
(HO)

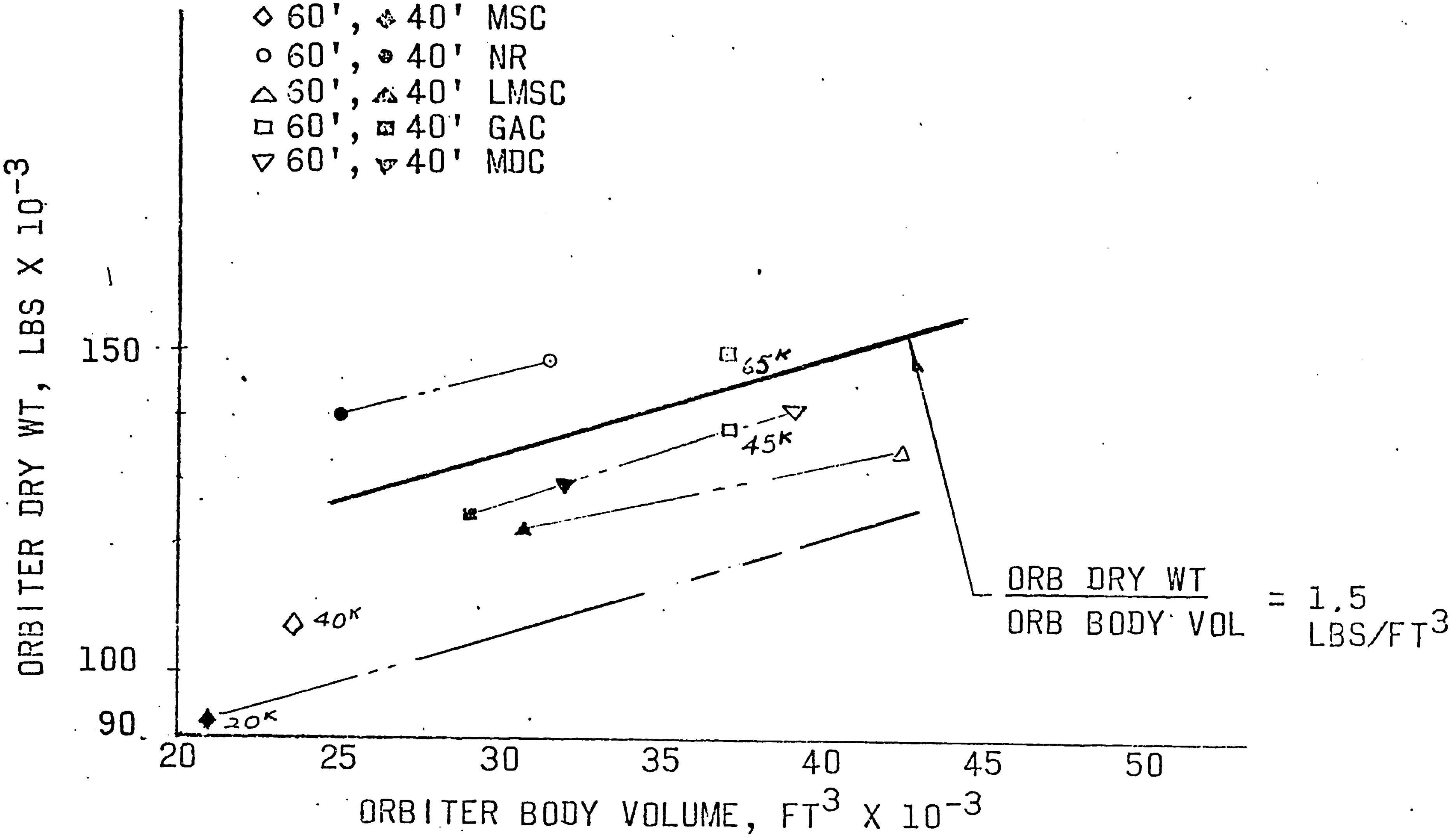

Note: HO- use of external fuel tanks for the orbiter

## RESULTANT WEIGHT EFFECT
## (HO)

$$\Delta \text{ ORBITER DRY WT} = \Delta \text{ P.L. VOLUME} \times \text{PACKAGING} \times \frac{\text{DRY WT}}{\text{VOLUME}}$$

$$\Delta\, 15\text{x}60 \text{ TO } 15\text{x}40 = 3500 \times 2.0 \times 1.5$$

$$= 10{,}500\# \text{ (pounds)}$$

CONCLUSION: CHANGE OF PAYLOAD BAY LENGTH FROM 60 FT TO 40 FT REDUCES INERT WEIGHT BY ABOUT 8%

reduction in the length of the orbiter, with a consequent loss of traffic, did not result in a dramatic decrease in the weight of the vehicle. Without major weight reductions, little cost advantage would be gained by such a reduction. This did not deter the Office of Management and Budget from continually pressing NASA to look at smaller shuttle designs, even to the extent of suggesting specific sizes to examine. The purpose of this was to attempt to get NASA to accept a lower development cost design. Apparently there was an unwillingness by the OMB examiners to recognize the validity of the traffic models both NASA and the DOD had drawn up with their consequent projections of sizes, weights and frequency of launches. The economic justification of the shuttle system required a fairly high level of usage and reductions in shuttle capability would mean a loss of payloads to upgraded expendable boosters. This would result in higher overall costs, as the reduction in development costs from downsizing could not make up for both the loss in shuttle traffic and the use of higher cost expendables. OMB felt that a new generation of expendable, lower-cost boosters might be developed that would be more economical than the shuttle, as it did not believe the levels of space traffic demand projected for the shuttle would occur. While carrying on these alternative sizing studies, NASA and DOD were both convinced that they had settled the issue of what design size they wanted. In the meeting of the STS Committee on October 27, 1971, it was pointed out that[13]

> "...although it would appear that several configurations were being studied, it was important to recognize that the orbiter configuration was very stable. The study activity is now primarily focused on different booster configurations."

It would only be under the severest economic pressure that NASA would show downsized vehicles as possible alternate designs. The DOD drew up an analysis of its shuttle system requirements as they related to NASA's draft of the final

Request for Proposal to be issued for building the shuttle orbiter. In this there was no indication of a smaller shuttle being desirable. To quote NASA's response to the DOD[14]

> "The DOD payload requirement of 40,000 pounds in polar orbit is the same as the RFP requirement. The RFP requires a total of 650 fps on-orbit delta-v capability which exceeds the DOD requirement by 150 fps. The RFP requires the OMS (Orbital Maneuvering System) tankage to be sized for a delta-v capability of 1000 fps based on the due east mission which is 300 fps above the DOD requirement of 700 fps.
>
> "The RFP east launch payload requirement is 65,000 pounds with on-orbit delta-v capability of 1070 fps. The DOD payload requirement of 73,500 pounds with 650 fps on-orbit delta-v capability can be attained considering only total weight by trading on-orbit delta-v propellant weight for payload. A reduced factor of safety would have to be accepted when considering the structural aspects of the orbiter. The NASA prefers not to change the RFP payload at this time. The impact of carrying 73,500 pounds of payload at nominal safety factor will be assessed during phase C. Acceptance or rejection of the requirement will depend on results of this assessment."

What DOD missions required 73,500 pounds into a due east orbit is unclear due to classification of the DOD mission models. Current assessments do not appear to have this larger weight requirement, which seems to have been an upper limit on the size possibilities of single DOD missions. It should be remembered, however, that almost any size of payload can be assembled in space by multiple shuttle launches. The two DOD weight requirements that were major design drivers were the 40,000 pound low earth polar orbit requirement and a requirement to put up to 5,000 pounds at a time in geosynchronous orbit. This latter requirement assumed a 60,000 pound space tug to transfer the payload to that higher orbit.[15] Later space tug and transfer stage designs were not nearly so heavy, but the total 65,000 pound requirement in a due east orbit remained unchanged.

In order to respond to OMB directions to examine the implications of smaller shuttle designs, NASA prepared various traffic models to determine what payloads could not be flown and why, if the cargo bay size was reduced and/or the payload capability was reduced. In late 1971, as negotiations with OMB became more intense, NASA prepared summaries and cost comparisons of the various downsizing possibilities. The different classes of missions considered appear in the chart on the next page. These missions were compared with five different payload size and weight capabilities.[16] Case 4 was the basic shuttle configuration which would accommodate all NASA and DOD payloads.

| Case No. | Bay Size | Payload Weight* |
|---|---|---|
| Case 1 | 10 x 30 | 30,000 |
| Case 2 | 12 x 40 | 30,000 |
| Case 2A | 14 x 45 | 45,000 |
| Case 3 | 14 x 50 | 65,000 |
| Case 4 | 15 x 60 | 65,000 |

* in equivalent "due east" orbits

As the payload bay was decreased in length, many of the DOD payloads (such as then-existing Big Birds) were eliminated at the 50 ft. mark, as were some NASA planetary payloads. At the 50 ft. length, the capability to fly a space tug/ payload combination for synchronous orbits was lost as well. A 45 ft. length appeared to be the minimum practical size for many manned space flight modules as well as a variety of space science and applications with a one-way delivery capability. The 30 ft. length eliminated nearly all DOD payloads, most applications payloads, some of the space science payloads, and all planetary payloads.

NASA minimum requirements for the cargo bay diameter were set at 14 ft. from manned flight considerations. A space station module or other "man can" size for a 10 ft. diameter bay would have an outside diameter of 9 ft. (1 ft. clearance requirement), and an inside diameter of 8 ft. By the time cabling, consoles, cabinets and other

## Mission Analysis

| Mission Class | Payload |  | Tug |  | Total |  |
|---|---|---|---|---|---|---|
|  | Size | Weight | Size | Weight | Size | Weight |
| Applications (NASA, DOD, COMM) | 14x15; | 3,000 | 14x35; | 52,000 | 14x50; | 55,000 |
| Science | 14x50; | 30,000 | -- |  | 14x50; | 30,000 |
| Planetary | 13x20; | 8,000 | 14x35; | 52,000 | 14x55; | 60,000 |
| DOD | 10x60; | 40,000 | -- |  | 10x60; | 40,000 |
| Manned | 14x40; | 30,000 | -- |  | 14x40; | 30,000 |

Conclusion: 1. 14x50; 60,000 pounds captures all except some DOD and NASA planetary missions

2. TUG alone requires 14x35, leaving only 14x15 for synch. orbit payloads

12-11-71

accommodations were added, the remaining interior size was considered unacceptable. In comparison, Skylab was 22 ft. in diameter while the Apollo Command Module was 13 ft. Some science, applications and planetary payloads were also better accommodated at a 14 ft. diameter.

The payload weight requirement of 60,000 to 65,000 pounds was set by the space tug as well as DOD payloads. Without the tug, the manned modules established a requirement of 45,000 pounds. The modules themselves only weighed 15,000 to 20,000 pounds, but they needed to be boosted into a 270 n.m., $55^{\circ}$ inclination orbit. This required an "equivalent" due east payload capability of 45,000. There were about 28 different science, applications and planetary payloads that required at least a 45,000 pound capability.

NASA felt that if a decision was made to develop a shuttle with less than full capability, the 14x45 ft., 45,000 pound option was presented as the minimum useful configuration. It would not handle some planetary payloads, nor the space tug in combination with a payload. However, it would accommodate manned spaceflight modules, a one-way capability to synchronous orbit for civilian applications payloads, most NASA payloads and some DOD payloads.

The results of the studies, in terms of costs, are shown on the following table. Development costs include all research, development, test and evaluation expenses, but not the "investment" required in facilities and in a fleet of vehicles beyond the flight test vehicles. Amounts are in 1971 dollars. The cost trends were established by NASA and two of the contractors independently for the 1978-1990 period of shuttle operations. The main conclusion to be drawn was that the development costs did not vary sharply from one option to the next. Cost differences between adjacent options are about $200 million. The most important

Results of Studies

| Case | 1 | 2 | 2A | 3 | 4 |
|---|---|---|---|---|---|
| Payload Bay (ft) | 10 x 30 | 12 x 40 | 14 x 45 | 14 x 50 | 15 x 60 |
| Payload Weight (lbs.) | 30,000 | 30,000 | 45,000 | 65,000 | 65,000 |
| Development Cost ($B) | 4.7 | 4.9 | 5.0 | 5.2 | 5.5 |
| Operating Cost ($M/flt) | 6.6 | 7.0 | 7.5 | 7.6 | 7.7 |
| Payload Costs ($/lbs) | 220 | 223 | 167 | 115 | 118 |

cost reductions in the shuttle design were achieved through basic configuration changes from a fully-reusable shuttle to the TAOS design, while maintaining the same payload capability. Major cost drivers were the overall configuration, particularly the reusable manned booster in the early designs, and the technology requirements of the shuttle main engines and thermal protection systems. As NASA Administrator Fletcher wrote to Caspar Weinberger, deputy director of OMB, on December 29, 1971:[17]

> "No substantial cost savings can be realized by furthur studies. (All of the most recent cost refinements for a given payload size have been less than the overall cost uncertainties inherent in a large R&D undertaking.)"

The full 15x60 ft., 65,000 pound capability shuttle was termed a "best buy". In a meeting at the White House on January 3, 1972 NASA was given permission to proceed with the full capability shuttle. This decision was announced at San Clemente on January 5.

There were still some open issues in the shuttle design, such as the choice of liquid or solid boosters for the configuration (see the following page). Even after a go-ahead for a full-sized orbiter, NASA still felt obligated to include discussion of a downsized orbiter in order to show its analysis of liquid and solid boosters would be a thorough one. Figure 1 is a summary of the evolution of major shuttle capabilities during the period July 1970 to November 1971. Crossrange is discussed in the following section, while references to the shuttle main engine and use of external tanks are in the previous section on the overall technical development.

To summarize, the cargo bay diameter was driven by the sizes of manned space station modules, even after it was apparent that the space station and shuttle would not be funded together. DOD, however, could use the large diameter for some of its high-energy missions needing a space tug-so the 15 ft. diameter was retained. Switching to a 14 ft. diameter had a negligible cost impact and would have lost a

NATIONAL AERONAUTICS AND SPACE ADMINISTRATION
WASHINGTON, D.C. 20546

OFFICE OF THE ADMINISTRATOR

January 4, 1972

Honorable Caspar W. Weinberger
Deputy Director
Office of Management and Budget
Washington, D. C. 20503

Dear Cap:

The purpose of this letter is to document the decision reached yesterday concerning the space shuttle.

NASA will proceed with the development of the space shuttle. The shuttle orbiter will have a 15x60-foot payload bay, and a 65,000-pound payload capability. It will be boosted either by a pressure-fed liquid recoverable booster or by solid rocket motors. NASA will make a decision between these two booster options before requests for proposals are issued in the spring of 1972.

NASA and industry will also continue to study, for the next several weeks, a somewhat smaller version of the orbiter, with a 14x45-foot, 45,000-pound payload capability, with the pressure-fed liquid and solid rocket motor booster options. The main purpose of studying this smaller shuttle is to determine whether or not significant savings in operational costs can be realized, with solid rocket motors, at this smaller size. The decision between the larger (15x60 - 65,000#) and smaller (14x45 - 45,000#) shuttle will also be reached by NASA before requests for proposals are issued in the spring.

The basic decision to proceed with the shuttle development will be announced by the White House. Following that announcement, NASA will inform the aerospace industry of the details of the decision, as stated in this letter.

(from James Fletcher, NASA HQ)

few missions. Retaining the large diameter kept open the possibility of later getting authority to build the manned station modules. The cargo bay length was most heavily driven by the projected sizes of DOD reconnaissance satellites and some NASA planetary missions. While it could be doubted that NASA would be able to get funding for all its planetary missions, these doubts did not extend to the flying of reconnaissance satellites. They would be flown with or without the shuttle. The capability to put 40,000 pounds into a low earth polar orbit was primarily a DOD need, while the 65,000 pounds into a due east orbit included this capability as well as NASA's needs. The 65,000 pound capability also included the weight of a space tug and spacecraft capable of placing up to 5,000 pounds into geosynchronous orbit. The 5,000 pound figure was also primarily due to DOD projections of payload weight growths for the 1980's. Driven in part by the estimated weights of a space tug in conjunction with its payload, this figure was estimated to be capable of growth to over 73,000 pounds for some future (then-classified) DOD payload.[18]

SHUTTLE REQUIREMENTS EVOLUTION

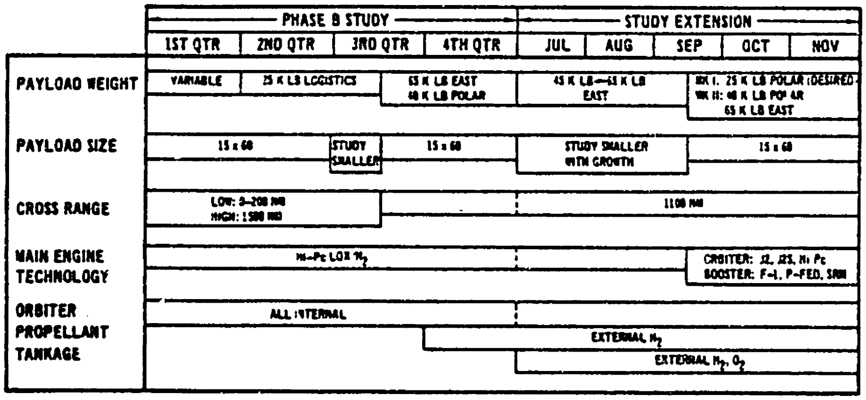

Fig. 1

## Payload Size and Weight Capability

1. The Next Decade in Space, PSAC Report to the President's Space Task Group, March 1970, p. 44.

2. Space Shuttle Contractors Briefing transcript, 6 May 1969, NASA-Manned Spacecraft Center.

3. Desired System Characteristics, Vol. II, Report of the Space Shuttle Task Group, 12 June 1969, p. 13.

4. Letter to Ray Leeth from Rene Bergland, 13 October 1970, NASA-Manned Spacecraft Center

5. "Reconnaissance and Arms Control" in Progress in Arms Control?, Ted Greenwood, San Francisco: W.H. Freeman and Co., 1979, p. 99

6. Ibid.

7. Enterprise, Jerry Grey, New York: William Morrow & Co., 1979, p. 68

8. Study Control Document NAS9-11160, Study of Alternate Space Shuttle Concepts, June 1970

9. NASA/USAF STS Committee Minutes of 18 August 1970

10. Memo to Deputy Director from Director of Research and Engineering Max Faget, NASA-Manned Spacecraft Center, 30 November 1970

11. Memo to Deputy Director from AF STS Group, Major Patrick Crotty, 3 December 1970

12. Memo to George Low from James Fletcher, 20 October 1971

13. NASA/USAF STS Committee Minutes of 27 October 1971

14. Letter to Col. Ralph Ford from Charles Donlan, Acting Director, Space Shuttle Program, 28 April 1972

15. "NASA Broadens Defense of Shuttle to Counter Critic's Attacks" in National Journal, Charles Barfield, 19 August 1972 p. 1327

16. Letter to Caspar Weinberger from James Fletcher, 29 December 1971

17. Ibid.

18. Space Shuttle-Skylab, Manned Space Flight in the 1970's, U.S. House of Representatives committee print, January 1972, Status Report for the Subcommittee on NASA Oversight of the Committee on Science and Astronautics, p. 712

## The Crossrange Capability

> "He had no choice. They agreed."
> -Mike Yarymovych, Department
> of the Air Force

In the June 1969 final report of NASA's Space Shuttle Task Group, volume II was a report of desired systems characteristics for the shuttle. Included in the discussion of the return phase from orbit was the specification that[1]

> "Opportunity to return should be available at least once per 24 hours to a single landing site selected prior to liftoff. More frequent emergency returns are possible using alternate sites. Consideration should be given to shorter times for specific missions."

The rationale for this noted that for a return opportunity to a preselected landing site in the continental U.S. each 24-hour period from an orbit with an inclination in the range of 55° to 90°, the crossrange requirements vary from 250 to 400 nautical miles.

Crossrange refers to the capability of the vehicle to maneuver to either site of a selected ground track. Roughly a measure of the "landing footprint" of a vehicle, other relevant factors include the landing site latitudes, orbital inclination and on-orbit $\Delta V$ capability. The crossrange shown by the solid curves of Figure 1 represents the requirements necessary to guarantee one return opportunity per 24 hours for the worst possible alignment without requiring any on-orbit phasing propulsion. The requirements necessary to guarantee return opportunity twice daily to the preselected site is also represented by the dashed curves of Figure 1. The relative merits of reducing the wait time in orbit by increasing the aerodynamic maneuvering capability of the vehicle or by providing on-orbit propulsive phasing capability had not been evaluated at the time of the SSTG report. Crossrange requirements were initially associated with a nominal return to a preselected landing site. Reduced on-orbit wait times and increased return opportunities would

CROSS RANGE REQUIREMENTS FOR RETURN TO THE CONTINENTAL UNITED STATES.

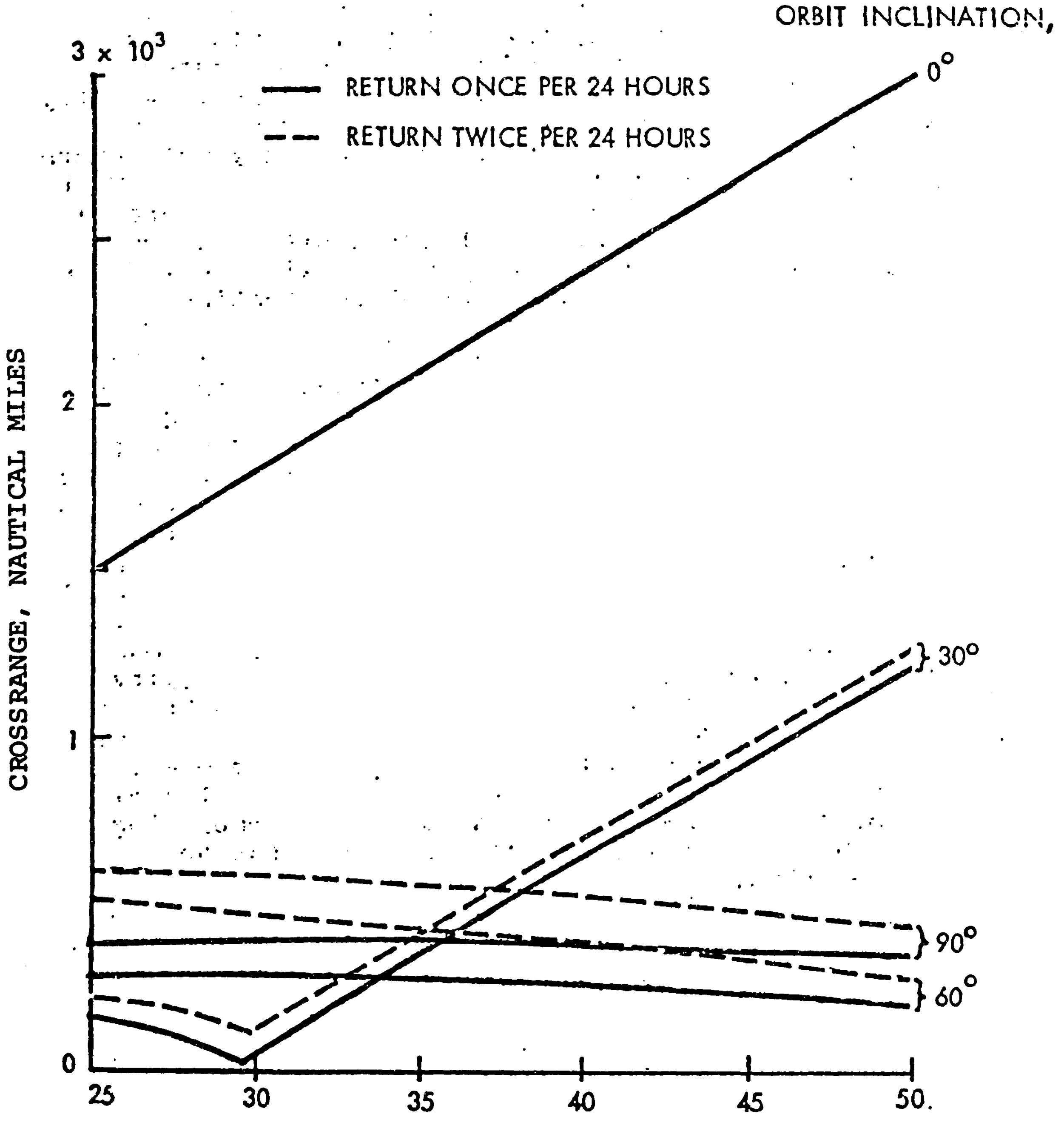

FIGURE 1

result from a higher crossrange capability (for orbits of all inclinations). With a worldwide network of emergency landing sites, return opportunities several times a day would be possible.

When alternative phase A shuttle study contracts were released in June 1970, in parallel with the two current phase B studies, the Study Control Document had become explicit on the subject of crossrange. In particular, the list of program requirements stated[2]

> "(A) The design mission shall be a 100 NM due east circular orbit. The design mission insertion orbit shall be 50 x 100 NM and for purposes of performance comparison calculations the vehicle shall be considered to be launched from a latitude of 28.5° north; (B) The reference missions of major interest are: (1) 100 NM south polar circular orbit; (2) 270 NM at 55° inclination.
>
> The orbiter shall have a nominal hypersonic aerodynamic crossrange capability of 1100 NM."

The aerospace community was not unanimous in embracing the desirability of a high crossrange orbiter. Even the touchdown of the orbiter on land was questioned as peripheral to the central goal of inexpensive and routine access to orbit. Defenders of ballistic vehicles compared lifting body or other winged reentry profiles to ballistic water-recovery designs:[3]

> "In the re-entry phase, we trade off high heating rates and receive longer heating times and greater total heat input. The net effect is a loss of payload. We gain lower re-entry accelerations....As long as the crew and passengers are even moderately healthy individuals,...the reduced acceleration cannot be presented as a significant advantage.
>
> "The second 'advantage' touted for the high L/D re-entry is 'footprint'. A large footprint carries the capability for a wider selection of landing point for a given deorbiting condition. However, any landing point within the maximum latitude excursion of the orbiting craft can also be selected by waiting a bit longer and deorbiting at the proper time...How much are we willing to pay for a minor gain in scheduling convenience?
>
> "Expansion of landing opportunities in emergencies cannot be cited as an advantage of high-lift re-entry...a lifting body craft cannot be safely ditched in the ocean, nor can it be landed on rough terrain. The ballistic vehicle with parachute can do both, and in substantially any weather."

While correct in claiming that the image of "airline-like operations" had probably been accepted too uncritically in assuming winged vehicles to be the optimum solution for routine space access, the specific arguments were not compelling. The lower re-entry accelerations were done as much for the cargo as the passengers. A significant aerodynamic capability would preclude having to ditch into water while safety concerns in controlling ballistic return profiles has continued to necessitate wide landing areas for them. The argument that an advantage in scheduling deorbit was not cost effective for NASA and other civilian missions in designing a high crossrange vehicle was the most widely accepted rationale for trying to delete the crossrange requirement. It was assumed that a crossrange of about 200 n.m. would be adequate to compensate for any deorbit burn errors, and the use of air-breathing engines for go-around and cruise capability would make it desirable to design the orbiter primarily for subsonic flight. High crossrange was accomplished through the use of high L/D at hypersonic speeds, while low crossrange designs rode through the hypersonic regime in ballistic form and utilized a higher L/D at subsonic speeds. Combining the two capabilities results in a design that would be optimum for neither regime and would cost more than a single purpose design. While NASA initially leaned to a low crossrange design, while preserving aircraft-like landings, this would soon be altered by the Air Force.

## Air Force and NASA Needs

In the minutes of the fourth NASA/USAF STS Committee meeting of 2 October 1970, the Air Force provided a briefing on crossrange requirements. While classified, DOD requirements reflected a need for a vehicle design which had a potential capability of 1100-1500 n.m. crossrange. The primary military need for crossrange was in operational flexibility and fast response for dedicated missions.

Operational requirements for some of the DOD missions precluded in-orbit loiter to wait for selected landing areas, while other missions required a quick return from orbit to avoid overflight of hostile areas or for crisis response.[4] Most of these missions were concerned with real-time reconnaissance. The utility of crossrange was also discussed as an added feature to provide operational simplicity and to enhance the emergency return for all missions. The military responded to the argument of 'scheduling convenience' as unnecessary by citing the priority needs of military missions. The presentation included a preliminary assessment of the technical risks and cost involved in providing the high crossrange. Discussion of this military requirement had gone on through the 1960's in evaluating various schemes for winged return from orbit and NASA was aware of the military preferences. Preliminary data, before phase B studies were complete, indicated a minimum cost impact with no increase in technical risk.

NASA was primarily concerned with providing a routine daily opportunity to return to the prime airfield (at Kennedy Space Center) or to other free-world airfields in the event of an emergency return. With phasing times, phasing burns, and de-orbit returns properly controlled, a crossrange of between 300-500 n.m. from the reference orbit ($55^{\circ}$ at 270 n.m. altitude) could be achieved and would be adequate for NASA missions. The agency was concerned that designing a vehicle to fly in both the hypersonic and subsonic regimes would be costly with unknown control problems in handling a vehicle at extreme hypersonic speeds at altitudes where there was no experience with winged vehicles. Concerning the actual cost differences and technical risks, NASA opted to have the phase B studies look at both high and low crossrange orbiter designs. The Air Force noted that missions that required maximum crossrange were not those that required maximum payload and that payload weight might be traded for crossrange.

In the following meeting of the NASA/USAF STS Committee on 28 October, NASA noted that the maximum crossrange that appeared obtainable from the North American Rockwell phase B straight-wing configuration was about 1200 n.m. The payload was about the same for both straight-wing and delta wing configurations if both versions are optimized for the same crossrange capability. The weight penalty for the crossrange, about 15,000 pounds, was about the same for both high and low configurations. If optimized for high crossrange, NASA could hold to a 25,000 pound baseline payload capacity while incurring a growth in the gross lift-off weight. Although NASA expressed doubts, the Air Force pushed for a decision between the high and low crossrange (delta or straight wing designs) by January of 1971.

## Straight vs. Delta Wings

We have mentioned straight wing and delta wing designs already without discussing their detailed performance. There were a wide variety of wing designs considered during the conceptual design of the shuttle, and the crossrange capability they provided was only one of the parameters taken into account in the overall design of the system. Other issues were the levels of aerodynamic heating to be encountered, loads on the structures, max q levels on lift-off, aerodynamic stability across a wide range of speed and altitude, and the usual concerns of the size and cost of the structure itself. While concerned here chiefly with the shuttle's crossrange capability, these other concerns and the mission requirements of the Air Force help shift the debate to favor the delta wing design.

Typical of the straight wing designs, and the one most referred to in the design discussions, was that of Figure 2. Designed primarily by Max Faget of Johnson Space Center, this vehicle was intended as part of a fully reusable concept with both orbiter and booster using straight wings. During entry the vehicle would be at a very high angle of attack

**NASA**
S-70-40032

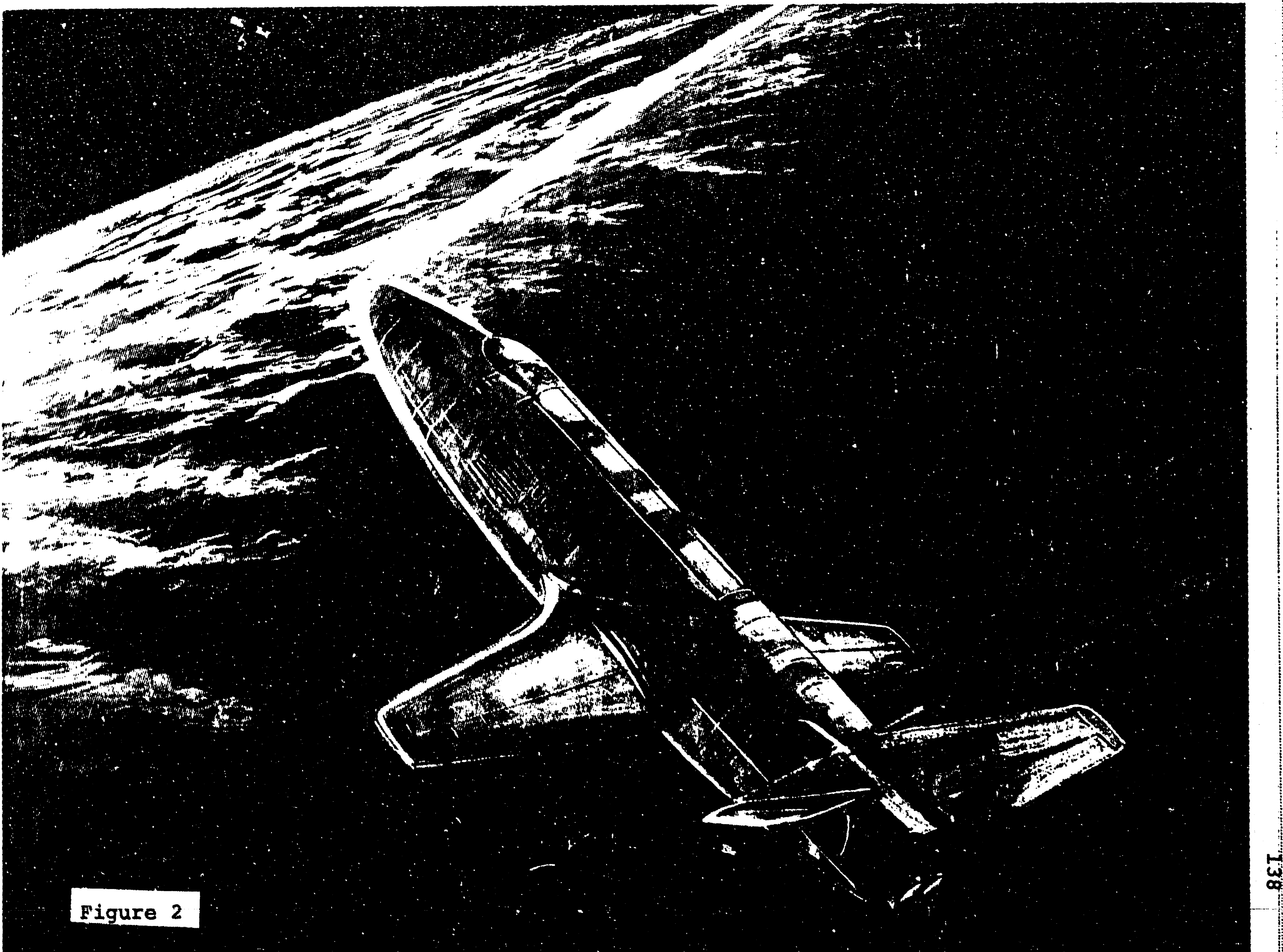

Figure 2

NASA

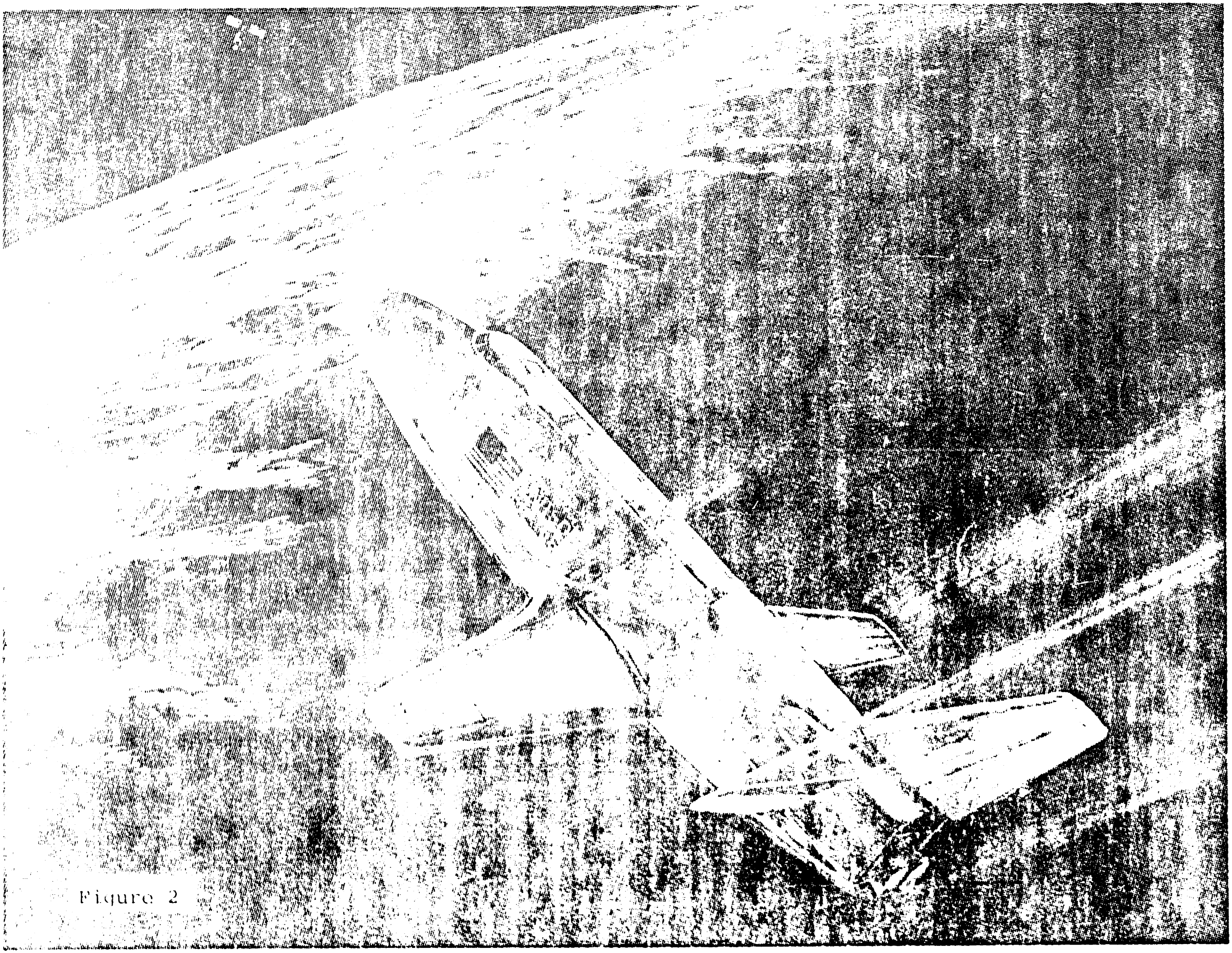

Figure 2

(almost $60^{\circ}$), producing both very high lift and drag values with an L/D of about 0.5. The vehicle would remain in this flight attitude throughout the entire descent to approximately 40,000 ft. where the velocity would have dropped to less than 300 fps. At this point, the nose is pushed down and the vehicle dives until it reaches adequate velocity for level flight. On board turbojets would be deployed and started up with the vehicle making a normal aircraft approach and landing.

Figure 3 illustrates the important advantages of entry at a high angle of attack from a heating standpoint.[5] With the vehicle trimmed near the maximum lift coefficient, the altitude of entry is near maximum, thereby minimizing heating rates and radiation equilibrium temperatures. The high drag which develops shortens the duration of the heat pulse. Only the lower surfaces, about a third of the total wetted area, are directly exposed to the on-coming airflow. This minimizes the need for insulation. Other surface areas exist either in a low-density flow field, or where the flow is separated. These large areas, such as the tops of the wings, horizontal tail and fuselage, require only the thermal capacity of the normal skin, while other areas, such as the sides of the body, require only a modest amount of insulation. Although this approach tends to concentrate the heating on the lower surface, the temperatures were favorably comparable to vehicles flying lower angles of attack. The flow over the lower surface was predicted to be generally subsonic with a sufficiently low Reynolds number to assure laminar flow through the period of highest heating. Since the stagnation point on the wings, body and tail would be some distance behind the leading edge, no area would receive a concentrated heating that could lead to a localized structural degradation. This last point was important as some designers feared that the

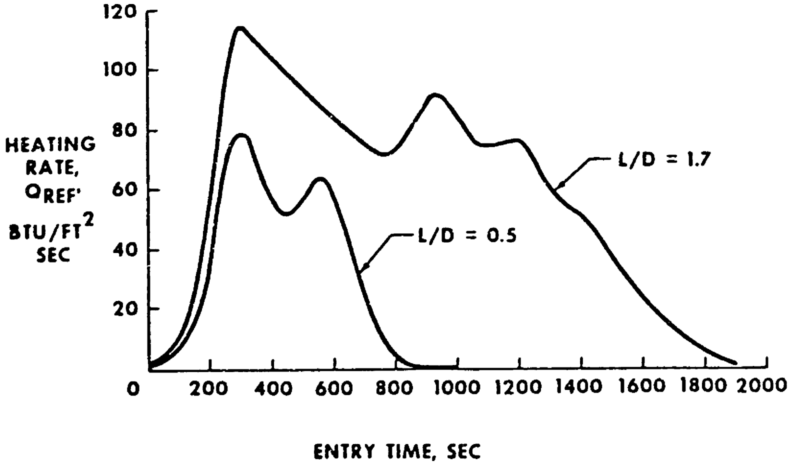

Fig. 3 Comparison of heating rates for high and low L/D orbiter.

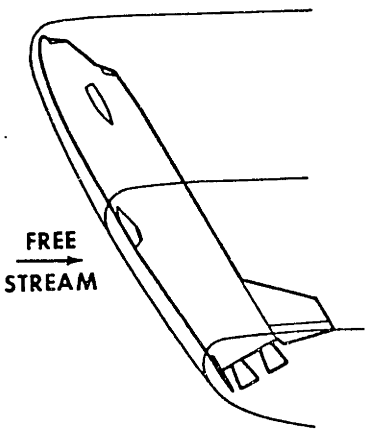

Heating at High Angle of Attack

- High lift and drag increases altitude of deceleration and shortens duration of heat pulse
- Only lower surface receives appreciable heating
- Heating on lower surface minimized by low velocities in boundary layer and laminar flow
- Many areas require no thermal protection

Stability at High Angle of Attack

- Only lower surfaces generate significant forces
- Flow is essentially newtonian, nearly invariant with mach number
- Pitch stability and trim achieved by camber of lower body surface
- Roll stability achieved from wing dihedral
- Neutral stability in yaw (as in Mercury, Gemini and Apollo)

straight wings could be ablated enough so that their subsonic performance would be affected.

An angle of attack of 60° was chosen for entry as a compromise between heating and load factors. With this trim attitude, both the heating duration and the intensity at peak heating could be kept reasonably low. However, maximum crossrange obtainable during entry was only about 230 n.m. For higher crossranges, a weight penalty in terms of greater thermal protection is required. Figure 4 shows the amount of crossrange available with higher values of the L/D obtained by reducing the angle of attack. The leading edges of the nose, wing and tail would be exposed to higher radiation equilibrium temperatures as the L/D and crossrange increased. The duration of the heat pulse also increases as in Figure 5. The time shown covers passage from a 400,000 ft. altitude to the end of heating. Little heating takes place before the onset of maximum heating.

In initial assessments of various configurations for the orbiter, the misconception often arose that a delta wing design had only its high crossrange to recommend it. This was incorrect as the delta, while having the high crossrange as its singularly strongest selling point, had other positive attributes as well. Delta lifting body designs have spanned the gamut of maximum L/Ds equal to 0.8-3.0 for spacecraft applications. These same delta designs at higher angles of attack displayed L/Ds of 0.45-0.78. Depending on the specific configuration and entry flight path employed, crossranges from 200-4000 n.m. would result.[6] From a strictly geometric viewpoint, trying to enclose compartments for both payload and onboard propulsion with bodies having minimum wetted areas pushes the orbiter toward high fineness ratios. The increased size allows the use of increased nose and leading edge radii and increased profile angles permit retention of relatively low bluntness ratios.

**LIFT AND DRAG REQUIREMENTS FOR CROSS RANGE**

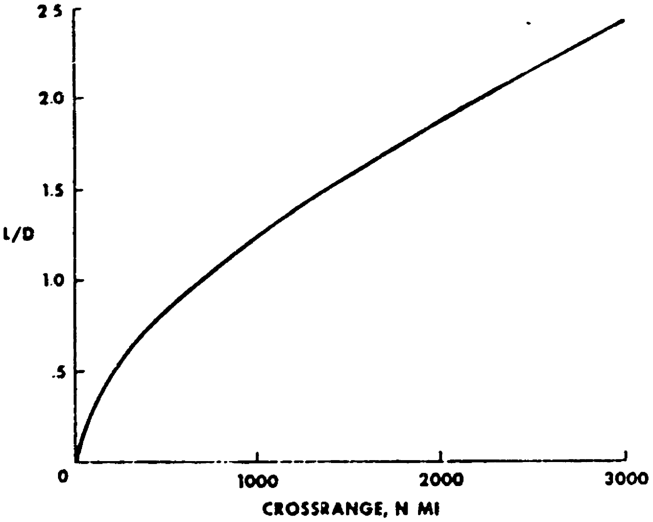

Fig. 4

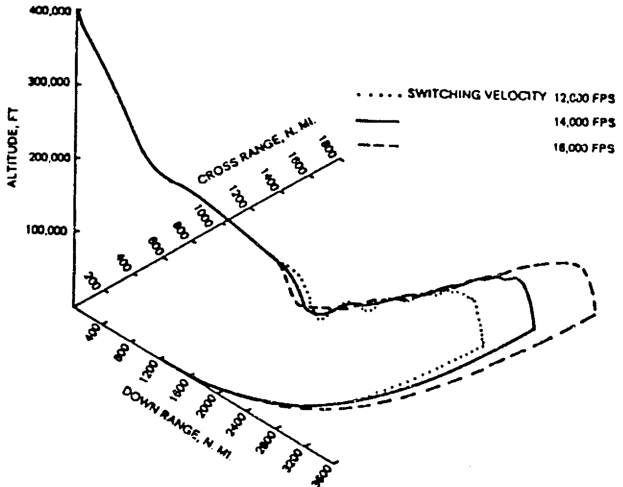

**High alpha/Low alpha maneuvering** would enable delta to re-enter with low heat load and peak temperatures. Vehicle would begin re-entry at 50-deg angle of attack, then at switching velocity, change over to a lower angle of attack, and turn for cross range.

**DURATION OF HEAT PULSE**

Associated with cross-range capabilities ($\gamma = -1.5$ deg).

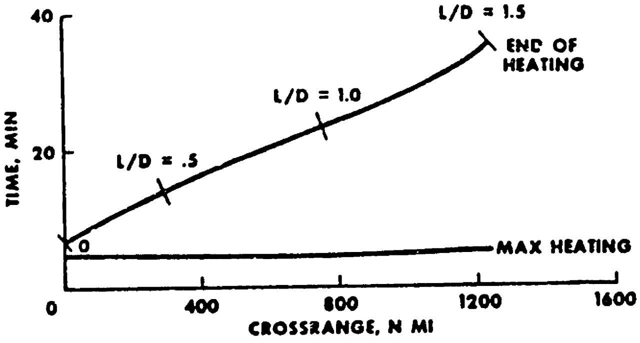

Fig. 5

**STAGNATION HEATING FOR CROSS RANGE**

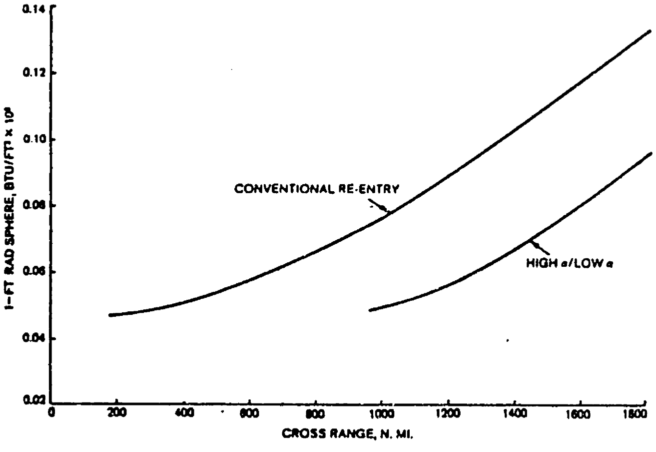

When considering the straight-wing configuration, slight CG shifts and balance considerations would move the wings aft and tend to close the gap between the tail and wing. When designs had the orbiter carrying its own fuel, with the CG more near the middle of the vehicle's length, it made sense to have straight wings in about the same position for stability. When the fuel was moved outside to external tanks and the weight of the orbiter's main engines grew, arguments were raised that the Faget design with its long leading and trailing edges would incur more heating problems than a shorter craft with lower aspect ratio delta wings. In addition, wind tunnel and drop tests of models of the straight wing design indicated that while the design was statically stable in vertical flight, it was dynamically unstable, showing a divergent oscillation in a falling-leaf mode and a tendency for a flat spin.[7] Calculations showed the motions could be easily damped by reaction-control thrusters, but performing complex control commands during orbital reentry was not favored. It was recalled that the one crash of an X-15 was due to a flat spin problem that its thrusters were unable to counter.

Much of the work with delta wings concentrated on the type of reentry profile to be flown, in particular the use of the high angle of attack. The rationale was that the high angle of attack, while producing higher temperatures and heat transfer rates than the low angle of attack for the delta, reduced reentry times to lower the total heating. It was postulated that by prolonging reentry times, high L/D flights at low angle of attack would require more thermal protection system weight. Enhanced crossrange capability was seen as exacting a penalty in insulation weight which reduced the payload. Some designers interpreted this to mean that crossrange was a bad thing and 'zero' crossrange advantageous. Such a conclusion did not go far enough, as it relates everything to the payload as a reference point. If crossrange was used as the reference point, higher L/D would appear desirable with the lower L/Ds seen as less flexible. Performance comparisons usually emphasized trajectory differences in terms of hypersonic L/D and conventional maneuvering, i.e. turning at high velocity for crossrange. Delaying major crossrange maneuvering until after the period of severe heating, however, would take advantage of the higher aerodynamic efficiencies at lower velocities to fly laterally with little or no penalty in thermal protection system weight. Initial entry and flight would take place at a high angle of attack, giving this performance profile the name "High$\alpha$/Low$\alpha$". By flying at a high angle of attack, heating is localized to the lower surface of the orbiter and the surface area requiring heavy-duty insulation is minimized. Although peak heating rates are high, total heat load to the structure remains low as the time of significant aerodynamic heating is short.

After transition to subsonic flight, the straight-wing vehicle not only produces a higher lift coefficient but a higher L/D for the terminal phase. Delta wings typically have a lower subsonic L/D, due chiefly to their lower aspect ratios. This reduces the glide range and tends to make the flare maneuver more critical. On the other hand, the straight-wing vehicle has to have a tail to provide trim and control moments, but this extra weight and area still compares favorably with the delta wing. A delta wing would have to have approximately four times as much area as a straight wing to achieve the same landing speed for a vehicle of the same size and weight.[8] In Figure 6 we can see the L/D operating range during approach and landing for typical shuttle designs using straight and delta wings. During the terminal phase of landing when the lift coefficient is increased as velocity is decreased, the delta

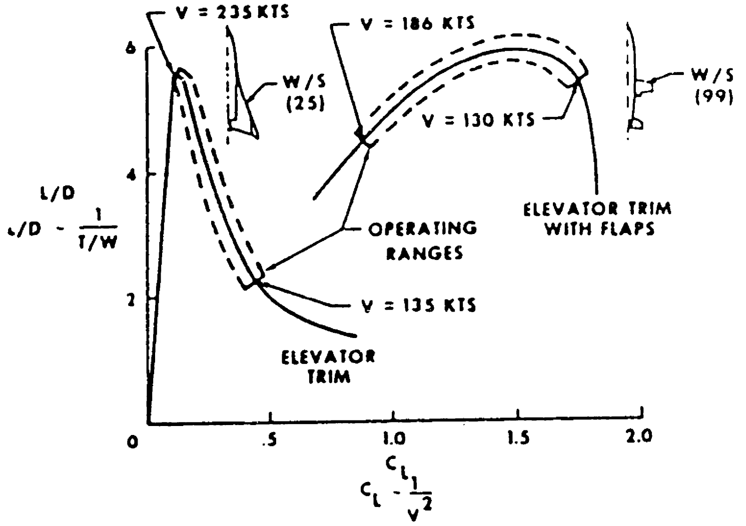

Fig. 6 L/D characteristics of delta and straight wing vehicles in landing configuration.

wing experiences a decreasing L/D. This is undesirable, particularly for unpowered landings, but the delta wing also provides more lift toward the rear of the vehicle where the CG tended to shift as designers moved the orbiter's propellants to external tanks.

Observations that the unswept wings were desirable centered around drag and heating concerns. Wing sweep produces a large reduction in wing drag throughout the transonic and supersonic regime. It delays the onset of transonic drag, reduces leading edge heating, and reduces wing shock strength. The reduction of shock impingement heating would provide benefits in terms of reduced demands on the thermal protection system. Attempts were made to provide some sweep to the wings and even move them aft a bit in response to shifting CG design points. The high crossrange claimed by Rockwell for one of its straight-wing designs turned out to be unusable due to excessive heating on reentry and pitch instabilities. While most criticisms of the straing-wing could be designed around, its basic failing remained. This returns us to the Air Force's requirements for crossrange.

## Basic Reference Mission 3

Considerable effort was made in the early phases of the design process to determine just what the shuttle would do. Not in terms of the purposes of its payloads, but in terms of the types of flight sequences it would typically be asked to perform. Four generic classes of missions were derived by the Manned Spacecraft Center at Houston in conjunction with studies by the Air Force. Known as Basic Reference Missions (BRM), the first considered a third-stage deployment and retrieval such as would be done in a mission with a space tug. The second was a combination rendezvous, servicing and sortie mission to low earth orbit. The fourth was an extended earth observation sortie to polar orbit. BRM 3 was a quick retrieval and return of an orbiting pyaload and included the needs of real-time reconnaissance. This was almost wholly an Air Force requirement, as no planned NASA project contemplated the need for such a mission. The payload was considered to be in a retrograde inclination orbit plane of 104° at about 100 n.m. The total mission duration would be one revolution or about two hours. The sequence of mission events is illustrated in Figure 7.

The shuttle would be launched from the Western Test Range (Vandenberg AFB) on a launch azimuth of 198.6°. Prior to lift-off, the orbiting payload would be maneuvered to a position for rendezvous. At insertion, about 10 minutes after lift-off, the shuttle is at an altitude of 91 n.m. in an orbit of 80.5 by 100 n.m. The rendezvous is performed manually with the on-board reaction control system (RCS). The terminal phase of control begins 17 minutes after lift-off and continues for 14 minutes till the shuttle is 100 ft. from the payload. After minor closing movements, the payload (about 60 ft. long) is stowed at 54 minutes after launch. The deorbit maneuver is at about 59 minutes and requires a $\Delta V$ of 396 fps to achieve the target entry interface at 400,000 ft. altitude. Entry occurs at 1 hour 12 minutes. The shuttle uses its crossrange to aerodynamically shift its groundtrack to the east by about 1100 n.m. so landing can occur at the Western Test Range. Landing occurs at 1 hour 50 minutes.

BRM 3 imposed a variety of demanding requirements on the shuttle, as might be expected for such a time-critical operation. Of central interest here however, is the need to cover a 1100 n.m. crossrange in order to return to the same launch site. This distance is approximately the distance the launch site has moved with the earth's rotation during the mission. It is interesting to note that early studies, before the BRMs were established, had shown that the military was very committed to the idea of a high crossrange

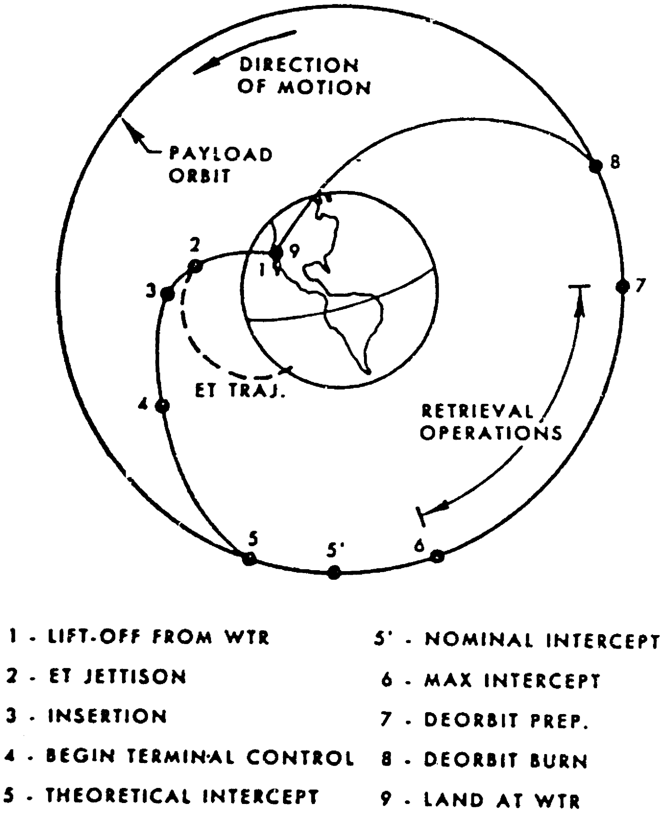

Figure 7 Orbital Sketch of Mission 3

capability in order to insure return of the shuttle to the base it left from, preferably a secure Air Force installation.

At a conference of Air Force and NASA design planners concerned with the shuttle in January of 1971, a single set of system requirements for contractors working on phase B definition studies of the shuttle were drawn up. Among the requirements the contractor's designs would have to meet would be the 1100 n.m. crossrange capability. This effectively eliminated the straight-wing designs that had been generated in phase A shuttle studies and concentrated efforts on optimizing the delta wing for the shuttle. The straight wing did not have any growth potential to the high crossrange the Air Force required, while the delta design could be used by all parties. Other considerations in the wing design, discussed earlier, had made NASA receptive to adopting a delta wing. In addition, the Air Force's role as a major customer for shuttle service insured that its views were heard. Planning in 1972 called for the military to utilize about 22% of shuttle missions which would require about 34% of the actual shuttle launches (some missions would need more than one launch).[9]

## The Final Configuration

The wing design went through a variety of iterative stages to reach an optimized tradeoff between hypersonic crossrange capability and good L/D characteristics for subsonic approach and landing. Figure 8 illustrates the specifications of the current shuttle orbiter configuration. The double-delta wing planform is a compromise between optimum trim capabilities above Mach 5 and the lift profile during terminal descent stages. Hypersonic L/D profiles of 1.3 at a $34^{\circ}$ angle of attack generates a comparatively low thermal load, while in the subsonic regime the orbiter provides a L/D of 4.4 at an $18^{\circ}$ angle of attack. The $81^{\circ}$ sweep in the inner wing section carries the center of lift

SPACE SHUTTLE ORBITER

# VEHICLE DIMENSIONS

| GEOMETRY | WING | VERTICAL STAB. |
|---|---|---|
| AREA | 2690 FT$^2$ | 413.25 FT$^2$ |
| ASPECT RATIO | 2.265 | 1.675 |
| AIRFOIL $Y_o$ 199 | 0010 MOD | WEDGE |
| SWEEP (LEADING EDGE) | 45 DEG | 45 DEG |
| (WING GLOVE) | 81 DEG | |
| M.A.C. | 474.81 IN. | 199.81 IN. |
| DIHEDRAL (TRAILING EDGE) | 3 DEG 30 MIN | |

CONTROL SURFACE AREA & MAX DEFLECTION

| | AREA | MAX DEFLECTION |
|---|---|---|
| ELEVON (ONE SIDE) | 206.57 FT$^2$ | -35 TO +20 DEG |
| RUDDER | 97.15 FT$^2$ | ±22.8 DEG |
| SPEED BRAKE | 97.15 FT$^2$ | 0 TO 87.2 DEG (TOTAL) |
| BODY FLAP | 135.75 FT$^2$ | -11.7 TO +22.55 DEG |

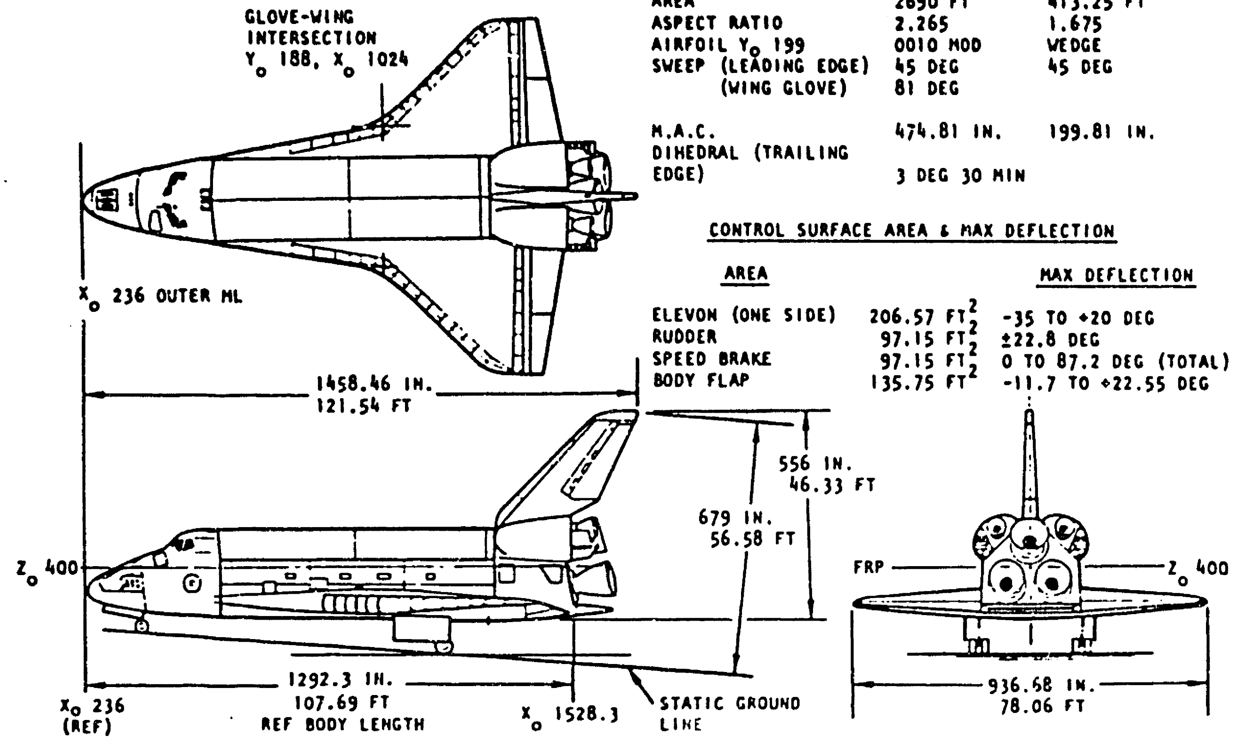

Fig. 8

Shuttle Orbiter Division
Space Systems Group

Rockwell International

forward and this has the desirable effect of limiting sink rates at high angles of attack at hypersonic speeds. At approximately quarter-span the wing slope changes to 45° with a mean aerodynamic chord of 12.039 m. and an overall aspect ratio of 2.265.

Although a full examination of why the shuttle's wings have their particular form would easily lead to a greatly-expanded paper, the interdisciplinary nature of the design of this particular aspect of the shuttle is clear. Wing design for a spacecraft returning from orbit impacts not only aerodynamics across speed and altitude regimes never before encompassed in a single vehicle, but includes the directly-related fields of aerothermodynamics, structural dynamics, stability and control systems, and the ever-present need to control weight and costs. In this particular example, the most significant design driver was the Air Force insistence on a high crossrange capability. Once this requirement was established, the delta wing with its hypersonic maneuvering capability became the baseline. The motivation for the Air Force to support a high crossrange vehicle stemmed from its policy toward the shuttle program as a whole. It would support the program, in political if not financial terms, if a vehicle was provided which would provide new operational capabilities not otherwise available. The performance of BRM 3 would be impossible with any other vehicle aside from the shuttle. Economic arguments for the shuttle's utility were only peripherally interesting to the Air Force. In the case of getting a high crossrange for the orbiter, the cost impact has been estimated at about a 10% increase over a straight-wing design, but this figure is open to interpretation.[10] A direct analysis of the cost impact of Air Force design requirements on the shuttle vehicle development is probably impossible. Both NASA and the Air Force worked closely together throughout the design process with each agency's ideas building and shaping the others. The shuttle's crossrange capability and the wing design as a whole was the result of institutional negotiation between different government agencies under an established policy that a vehicle would have to meet the needs of both the Air Force and NASA. While not suffering any compromise of NASA design goals, it was the Air Force's needs that were met in this design tradeoff.

## The Crossrange Capability

1. *NASA Space Shuttle Task Group Report*, Vol. II Desired System Characteristics, 12 June 1969, p. 40

2. Study Control Document. *Study of Alternate Space Shuttle Concepts*. NASA-Manned Spacecraft Center NAS9-11160 February 1970

3. *Astronautics and Aeronautics*, June 1970, "Shuttles-What Price Elegance?" by Robert Truax, p. 22

4. "Representative Space Shuttle Missions and Their Impact on Shuttle Design." by K.A. Young in AIAA/ASME/SAE Joint Space Mission Planning and Execution Meeting (10-12 July 1973), AIAA 73-600, p. 4

5. *Astronautics and Aeronautics*, January 1970, "Space Shuttle-A New Configuration" by Max Faget, p. 55

6. *Astronautics and Aeronautics*, January 1971, "A Delta Shuttle Orbiter" by Alfred Draper, Melvin Buck, William Goesch, p. 29

7. Faget, p. 60

8. "Fundamental Design Considerations for an Earth-Surface-to-Orbit Shuttle". by Max Faget and Milton Silveria in Proceedings of the 21st International Aeronautical Federation Congress (5 October 1970)

9. *United States Civilian Space Programs 1958-1978*, January 1981, Committee Print, prepared for the subcommittee on Space Science and Applications of the Committee on Science and Technology, U.S. House of Representatives, p. 567

10. Ibid.

## Configuration Selection

"Everybody was a shuttle designer."
-Klaus Heiss, Mathematica, Inc.

As NASA realized it lacked the political support within Congress and the Executive branch to proceed with a fully reusable shuttle, alternate designs received more attention. As described in the preceding chapters on the shuttle's overall history, the economic analysis by Mathematica played a crucial role in the final selection of the vehicle's configuration. This section describes the rationale Mathematica used to select the Thrust-Augmented Orbiter Shuttle (TAOS) configuration as the most desirable economically.

During the phase A and B activities, and particularly during the second half of 1971, many alternative shuttle concepts came under consideration. It is difficult to follow and appreciate all the different ideas proposed for the shuttle system. Several basically different approaches were investigated, among them two-stage fully reusable systems, two-stage systems with some external (expendable) tankage, manned orbiters with a variety of unmanned boosters, single orbiters with parallel burn and rocket assists, single stage to orbit concepts, stage and one-half concepts, and others. When variations of technical options within each of these approaches are considered, there were literally hundreds of different shuttle systems studied by NASA, the contractors and other interested parties (such as the OMB). Seldom if ever before had a single R&D program of the scope and size of the shuttle been studied in such detail, both economically and technically.

The configurations Mathematica finally came to study had already progressed through an extensive technical and economic elimination process. If all the shuttle systems had the same recurring costs (roughly the cost per flight) and differed only in the expected non-recurring costs, then the economic problem of system choice would simply require finding the system with the lowest non-recurring costs (RDT&E and investment). However, most of the reductions in non-recurring costs were achieved by increasing, in some way, the operating costs of the shuttle system in the 1980's and beyond. It was the economic tradeoff between non-recurring cost savings in the 1970's versus expected increases in operating costs in the 1980's and beyond that became the core of the economic analysis of different shuttle configurations.

The objectives of a reusable Space Transportation System were considered by Mathematica to be[1]

> "a) A new capability of meeting all now foreseeable space missions...whenever a proposed system cannot meet all requirements, the costs of the required expendable systems are fully included as part of that Space Shuttle System.
>
> "b) Reduction of space program costs...over the present expendable Space Transportation costs through reuse, refurbishment, maintenance, and updating of payloads. The Space Tug (for transporting payloads from low earth orbit to higher altitudes) is therefore included as an integral part of a reusable Space Transportation System.
>
> "c) Reduction of Space Transportation costs for all missions...
>
> "d) Option of later transition to a fully reusable system.
>
> "e) A low non-recurring cost to meet funding constraints.
>
> "f) Assurance of a low cost per launch..."

The first four objectives were considered as the principal motivation for an investment in shuttle. The last two objectives supported the major objectives. Had the objectives been different, for example, to maintain a manned space flight capability only, or to undertake a limited technology program in support of future space transport efforts only, then a different economic analysis would have been required. The shuttle was examined in the context of overall space transportation capability.

Two major elements were considered to make up the space shuttle system: a shuttle which operates between the ground and earth orbits of about 185 km., and a space tug which could be transported within the shuttle and which can operate from the relatively low orbit of the shuttle to high earth orbits such as synchronous equatorial orbit (35,500 km.). Only the combined shuttle and tug system provided a reusable launch system able to place and recover payloads from all widely used earth orbits. The capabilities, performance and operations of the tug were assumed as given and fixed for purposes of the analysis. The alternative shuttle systems analyzed were:

a. The two-stage fully reusable shuttle. This was the preferred configuration at the beginning of phase B design efforts. The orbiter carried all of its propellant ($LH_2$ and LOX) internally. The booster was very large, carrying its propellant internally as well and carrying a crew to fly the vehicle back to its launch site.

b. Two-stage reusable with external hydrogen tanks. Midway through the phase B studies, it became apparent that by carrying the hydrogen in external tanks to the orbiter, the size and development cost of the orbiter could be reduced. A secondary effect was that as the orbiter became more efficient, it could take more of the burden of propelling itself into orbit. This allowed for a lower staging velocity and a consequent lowering of the booster's complexity and cost (primarily in thermal protection savings on reentry).

c. Two-stage (F-1) flyback shuttle or the reusable SIC. The baseline orbiter would be used with external $LH_2$ and LOX tanks and a 60x15 ft. payload bay. The booster was evolved from the first stage of the Saturn V. It used conventional propellants and the Saturn F-1 engine, but had wings so it could glide back to the launch site.

d. Series burn pressure-fed booster (SPFB). Using the baseline orbiter, the wings would be removed from the booster, making it unmanned, and allowing it to return ballistically to be recovered by parachute. The propulsion system would be simplified from the above design by using gas-pressure, rather than pumps and turbines, to force the propellants through the engines.

e. Series burn solid rocket motor boosters (SSRM). Using the baseline orbiter, the booster uses two or more solid rocket motors instead of liquid propellants. The booster is again unmanned and recovered by parachute.

f. Twin pressure-fed boosters (TPFB). The baseline orbiter and the booster are mounted in parallel. The orbiter's engines and the booster engines fire in parallel. After the boosters are depleted, they are jettisoned and recovered while the orbiter continues to orbit. The booster engines no longer need to be steerable; all steering is done by the shuttle main engines. This is a TAOS design.

g. Twin solid rocket motor boosters (TSRM). Same as above except solid propellant boosters are used.

h. Identical vehicle shuttle. Using two identical orbiters with three drop tanks sandwiched between them, this design was a derivative of the early Triamese concept.

Each of these systems had considerable associated non-recurring costs and substantially different costs per flight (varying from $4.5 million to over $15 million in 1970 dollars). The total estimates of non-recurring costs, including the cost of the space tug and two launch sites (one on each coast) varied from a low of $6.9 billion to a high of $14 billion (also 1970 dollars).

A somewhat separate concept, advocated particularly by the OMB, was a space glider combined with a new expendable booster such as the Titan IIIL. The vehicle required two stages to put a winged recoverable payload carrier into orbit. The engines and launch-related avionics are placed with the booster stages and expended with each launch. Although the development costs were quite low for an unpowered glider and a new expendable booster, the cost per flight was estimated to be in excess of $30 million. OMB was attracted by the low non-recurring cost (less than $4 billion) and felt the high cost per flight was tolerable as it saw NASA projections of space transportation demand as overly optimistic. NASA saw the glider, reminiscent of Dyna-Soar, as a technological dead end and too expensive to be useful in taking over the bulk of space transportation needs. The glider did not allow NASA to fulfill its role as an R&D agency.

The trend throughout the configuration selection process had been driven by budgetary requirements which reflected the altered political environment from Apollo. As shown in Figure 1, development costs and peak yearly funding were driven down while costs per flight increased. Initial NASA desires to minimize flight costs gave way to pressures to cut overall costs. In the third quarter of 1971, while no final decision had been made on configuration, NASA had pretty much eliminated the two-stage fully reusable configuration and the two-stage reusable with external hydrogen tanks design, due to high development costs.[2] At the other extreme, the space glider was also dropped from serious consideration due to its high per-flight costs. If the glider was to be economic, NASA would have to have scaled down its traffic projections considerably; and it was the high level of usage projected for the shuttle that made the development of a new transportation system justifiable in the first place.[3]

In late October of 1971, Mathematica sent a memorandum to NASA Administrator Fletcher summarizing the results of its analysis on shuttle configurations at that time. Their finding that the TAOS design with external propellant tanks was the economically preferred choice did not change when their final report was issued in January of 1972. Figure 2 shows the central finding by Mathematica: the relationship between recurring and non-recurring costs for the families of shuttle designs found cost-effective and which could meet the objectives of a reusable Space Transportation System. There was the original fully reusable system at an estimated non-recurring cost of $12.8 billion and the lowest expected

# Cost/Funding Trend Summary

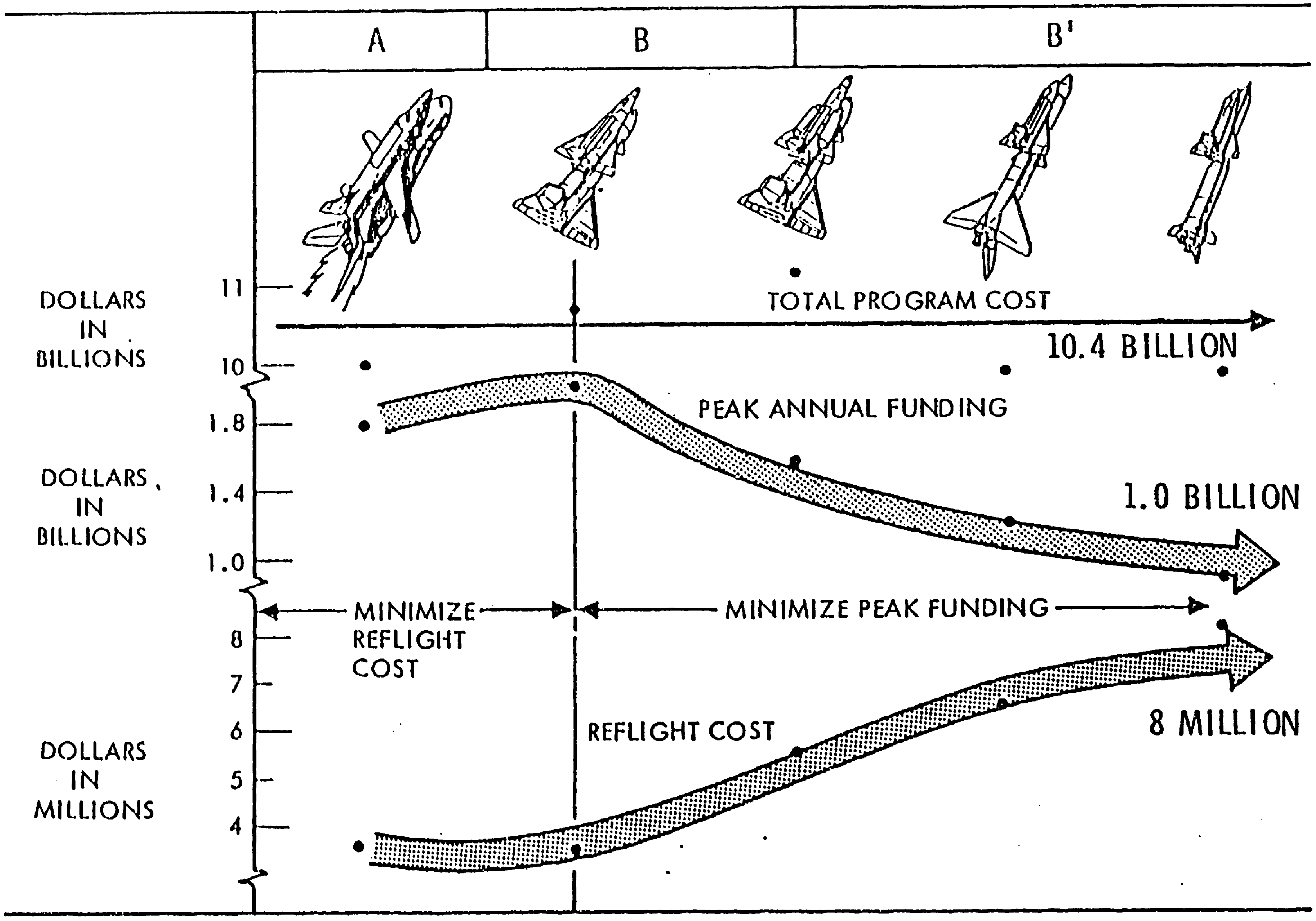

*Fig. 1*

cost per flight of $4.6 million; a family of cost estimates associated with F-1 booster technology; another set associated with the series burn and parallel burn pressure-fed systems using the baseline orbiter and unmanned recoverable boosters; a family of cost estimates associated with solid rocket motor boosters and the baseline orbiter using parallel burn operations and another set of estimates for using series burn. The space glider had a non-recurring cost of between $2.8 and $4.1 billion, but its $30 million or so cost per flight places it off the scale.

Figure 2 also shows the cost-effectiveness frontier as defined by these alternative technological choices; systems above and to the right of this frontier are all possible and feasible - many of them being studied in the phase B effort or included explicitly in the diagram. The existence of systems to the left and below the cost-effectiveness frontier are excluded. It would be highly unlikely that systems with lower recurring and non-recurring costs would have been

**COST-EFFECTIVENESS OF VARIOUS SPACE-SHUTTLE SYSTEMS**
As defined by nonrecurring-and recurring-cost estimates.

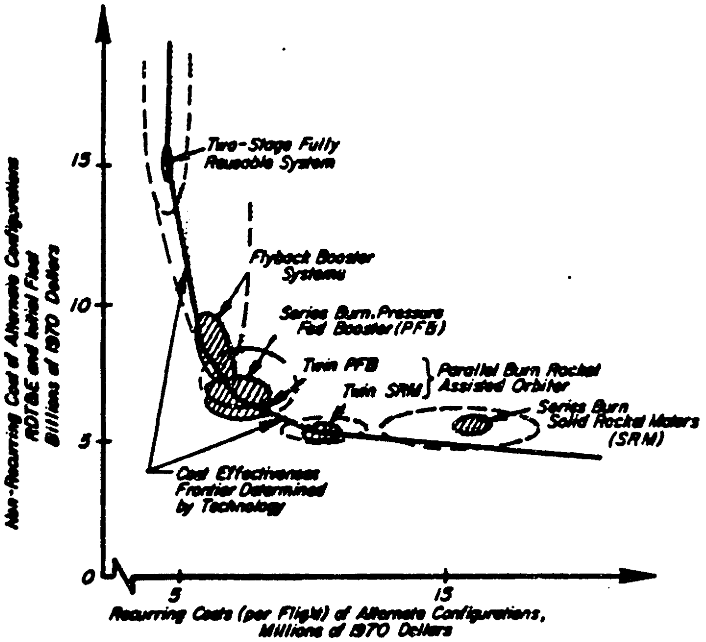

Fig. 2

missed in the efforts of the phase A and B studies (within the then-existing state of technology).

Mathematica used an "Economic Tradeoff Function" which was a straight line measuring the tradeoff between non-recurring cost variations in the 1970's versus recurring cost changes in the 1980's and beyond. The most economic shuttle system would then be that system along the cost-effectiveness frontier where the economic tradeoff function is tangent to the cost effectiveness frontier. The tradeoff function's position and slope would vary with the level of space transportation traffic demand, the estimation of payload benefits derived from using the shuttle system and the discount rate applied to the investments. The conclusion was that[4]

> "within the expected activity levels of space programs in the 1980's, a reasonable variation in the social opportunity cost of investment funds in the 1970's and a considerable variation in the expected payload effects due to repair, reuse, refurbishment and updating of payloads the "SRM-PARALLEL BURN BOOSTER", and the "PRESSURE FED-PARALLEL BURN BOOSTER" CONCEPTS (TAOS) EMERGE CLEARLY AS THE MOST ECONOMIC SPACE SHUTTLE ALTERNATIVES, with the "SERIES BURN PRESSURE FED BOOSTER" SPACE SHUTTLE AS A POSSIBLE THIRD ALTERNATIVE CHOICE."

With variations in the NASA and DOD Baseline mission model for 1979-1990 (624 shuttle flights), both TAOS systems (TPFM and TSRM) were equally preferred over any other system proposed; with higher activity levels to the advantage of the TPFB-TAOS and activity levels below the 624 level to the advantage of the TSRM-TAOS system. In each case the series burn PFB system was the third best alternative.

At a 5% discount rate, the TPFB-TAOS was the most economic choice among all the technical alternatives. At a relatively low discount rate, it may be desirable to spend additional funds on a more advanced booster program in the form of pressure-fed reusable systems with the promise of lowering the cost per flight later on. At a 10% discount rate, recommended by OMB, the TSRM-TAOS and TPFB-TAOS systems were about equally preferred with a slight advantage to the TSRM. The TPFB-TAOS promised lower operation costs but at the higher risk of developing a new liquid propellant booster that may not be easily recoverable. The TSRM-TAOS involved lower non-recurring costs and less risk due to Air Force experience with solid boosters near the required size (and the loss of a cheaper solid booster was less of a disaster than losing a liquid propellant booster) but at possibly higher costs per flight. At a 15% discount rate, the TSRM-TAOS emerged as the clearly preferred shuttle system on economic grounds.

The TAOS concepts eliminated the development of manned booster stages. With the use of thrust assists from either solid rocket or pressure-fed systems, which could be reusable, the TAOS concept promised a reduction in the non-recurring costs from about $10 billion to about $7 billion or less, with an acceptable recurring cost in the operating phase of the shuttle system. Mathematica found the decision between the TPFB and SPFB-TAOS systems a tradeoff between the higher non-recurring costs as well as higher risks in the development of the series burn pressure-fed booster as against the lower non-recurring cost, lower risk, but possibly higher recurring cost per launch of twin pressure-fed systems.

The detailed economic justification of the TAOS concept, when compared to any two-stage reusable system, was:[5]

> 1. The non-recurring costs of TAOS are estimated by industry to be $7 billion or less over the period to 1979 or to 1984-1985 depending on the objectives and choices of NASA.
> 2. The risks of the TAOS development are in balance lower but still substantial. Intact abort with external hydrogen/oxygen tanks is feasible; lagging performance in the engine area can be made up by added external tank capability. A large reusable manned booster is not needed.
> 3. The TAOS's that were analyzed promised the same capability as the original two-stage shuttle, including a

40,000 pound lift capability into polar orbit and a 60x15 ft. payload bay.

4. The TAOS can carry the Space Tug and capture high energy missions from 1979 on.

5. The most economic TAOS would use the advanced orbiter engines immediately. Our calculations indicate that among alternative TAOS configurations an early full operational capability and high performance engines on the orbiter are economically most advantageous and feasible within budget constraints of $1 billion peak funding or less.

6. The TAOS avoids the immediate need to decide on a large reusable booster and allows postponement of that decision without blocking later transition to a fully reusable system, if and when desired. Thereby, a TAOS eliminates or lowers the risk and potential cost overruns in booster development.

7. The TAOS would use "parallel burn" concepts which, if feasible, may change the reusable booster decision. Of course, a TAOS orbiter with a series burn pressure-fed booster is also possible.

8. Technological progress may make the expendable parts of the TAOS system (involving mainly tank costs, and thrust assisted rocket costs) less expensive thus further aiding TAOS concepts when compared to two-stage concepts or fully expendable concepts.

9. The TAOS funding schedule makes an early Space Tug development possible. The Space Tug is an integral part of the Space Shuttle System and may be developed by Europe.

10. The TAOS assures NASA the major objectives stated previously of a reusable Space Transportation System.

The analysis by Mathematica helped eliminate the extreme positions of the space glider (which NASA would not accept) and the fully reusable system (which OMB would not accept) and focused attention on the concept which was eventually approved. By the end of 1971, NASA had decided to proceed with a TAOS system using either solid or pressure-fed liquid boosters. In either case, the same orbiter would be used. NASA and its contractors spent the first few months deciding between solid or liquid boosters, eventually choosing solid boosters.

With access to the contractor studies, NASA analysis, and special inputs on payload effects and traffic models, Mathematica served to synthesize a single analysis of the economic value of the shuttle system. This analysis served to mediate the various groups who wanted different shuttle designs by providing a common basis for discussion. As an outside consultant, Mathematica was free from accusations of partisanship - but by using the data generated by industry and NASA, had the credibility to be carefully listened to. Even the OMB, while still seeing NASA projections of space transportation demands as too optimistic, was appeased by the use of cost-benefit analysis and at a discount rate (10%) that was considered conservative at the time. The Mathematica analysis thus played a key role in eliminating alternative shuttle configurations and focusing attention on the economically preferred ones. In a political environment where the shuttle was being largely sold on economic grounds, Mathematica's judgement was crucial.

# Configuration Selection

1. Economic Analysis of the Space Shuttle System, Mathematica Inc., Executive Summary 31 January 1972, NASA-CR-129570, p. 16
2. Letter to Donald Rice from George Low, 18 November 1971
3. Economic Analysis of New Space Transportation Systems, Mathematica Inc., Executive Summary 31 May 1971
4. Economic Analysis of the Space Shuttle System, op cit, p. 26
5. "Factors for a Decision on a New Reusable Space Transportation System", Memorandum for James Fletcher by Klaus Heiss and Oskar Morgenstern, 28 October 1971

## Air-Breathing Engine Systems

"Even our experienced pilots would not reject the engines if they were flying the shuttle."
-Milton Thompson, NASA Flight Research Center

A major feature of the shuttle, often commented on in the popular press, is the lack of conventional air-breathing jet engines for the shuttle's approach and landing sequences. The shuttle performs the final phases of its mission as a large unpowered glider- with an L/D less than that of commercial airliners. In the conceptual development of the shuttle it was generally assumed that air-breathing engine systems (ABES) would be incorporated into the vehicle's design. The purpose of ABES would be to provide propulsion during atmospheric flight upon reentry or for ferry operations. This section discusses the proposed use of ABES and why the requirements for such a system were eventually dropped.

In an internal memo at the Manned Spacecraft Center (MSC) dated 3 October 1969, the requirements for shuttle-powered vs. unpowered landings were discussed.[1] The three areas in which ABES would be useful were seen as go-around capability, ferry tasks, and development flights. Go-around capability included powered subsonic cruise, powered approach, and climb ability in landing configuration. Shuttle operational flexibility was seen as benefiting from having a go-around capability (GAC):

> "A wider selection of landing sites will be available to a shuttle with GAC because:
>
> -A conventional aircraft approach can be flown into fields with current equipment.
> -Touchdown accuracy should be better for a powered approach thereby decreasing recovery length and width requirements.
>
> GAC provides the option of in-flight refueling. This increases the capability of the shuttle to accomplish special missions by providing an alternate method for obtaining cross range."

> "The major factors involved in the approach and landing phase of shuttle operations over which no control can be exercised by planning are short term weather phenomena. GAC would provide a better capability to recover from rapid changes in wind and visibility."

A series of full-scale flight tests were envisioned with the shuttle vehicle using jet engines for horizontal take-offs. The horizontal flight test program would evaluate the vehicle's subsonic handling and landing characteristics before committing it to manned spaceflight. The ability of the shuttle to take-off and land under its own power without rocket assists meant that the ABES could be used to ferry the shuttle to and from launch sites, test areas, and construction facilities. With in-flight refueling, it would also be possible to land and recover the shuttle from airfields around the world. Air-breathing engines were thus seen as potentially useful in a variety of mission areas.

In the originally-planned fully-reusable shuttle design, there were two separate vehicles. After launch and staging, the first stage, or booster, reenters the atmosphere down-range and cruises back to the launch site to make a horizontal landing. The second stage, or orbiter, proceeds to orbit. Upon reentry, the orbiter descends directly back to the launch site to make a horizontal landing. Both vehicles would have go-around and self-ferry capability. The booster and orbiter mission requirements differed from each other to the extent that different jet engines would be optimum for each. The larger and heavier booster would consume a large amount of fuel during its more-than-400-mile cruise back to the launch site, while the orbiter had no cruise requirements for an operational mission. For minimizing development cost, there was a strong desire to use a common engine for both vehicles. These engines, whether separate or common, would be exposed to launch, space and re-entry environments and then started in-flight before landing.

The requirements to be met by the air-breathing engines are listed in Table 1. Total sea-level static thrust was about 180,000 to 220,000 pounds for the booster and about 60,000 to 75,000 pounds for the orbiter.[2] This large difference in thrust requirement would make it desirable to have different size engines for each vehicle. With a common low-thrust engine, a large number of engines must be used for the booster. With a common high-thrust engine, the orbiter would have excessive installed thrust due to engine-out requirements. Enough engines would have to be installed so that powered flight could be maintained even with one or two engine failures. The booster cruise requirement makes engine fuel consumption a more important consideration for the booster than the orbiter. As a result of the desire to reduce booster fuel weight, NASA originally specified hydrogen, for its high energy/weight content, as the primary engine fuel. Concern over the development and operation of a hydrogen-fueled air-breathing engine caused a subsequent change in the study ground rules to give primary consideration to conventional Jp fuel.

| | Booster | Orbiter |
|---|---|---|
| Total installed thrust, lbs. | 180-220,000 | 60-75,000 |
| Cruise range, n. mi. | 400 to 450 | 0 |
| Life, hr | 500 | 50 |
| Fuel | Jp or $H_2$ | Jp or $H_2$ |
| Weight sensitivity, engine/payload | 5/1 | 1/1 |
| Space exposure | minutes | 7 to 30 days |
| Go-around | yes | yes |
| Ferry | yes | yes |
| Inflight start | yes | yes |
| Engine out recovery | yes | yes |

Table 1 Engine Requirements

Example installed engine and fuel weights, for Jp and hydrogen, are shown in Figure 1. For the booster, the weights are for an example case having a constant gross-weight orbiter. The 144,000 pounds of Jp fuel weight is

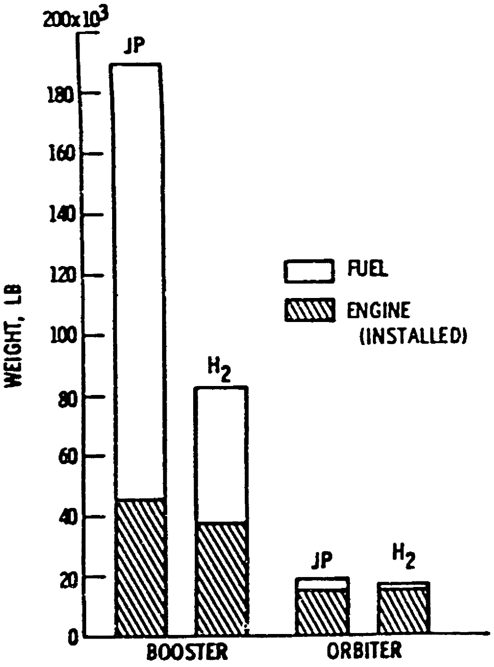

Fig. 1

more than three times the engine weight, thus emphasizing the importance of engine fuel consumption. Even with hydrogen, the fuel weight of 45,000 pounds is more than the engine weight. The engine weight is slightly smaller with hydrogen than with Jp because the booster is lighter and fewer engines are required. Estimates made by vehicle contractors of the effect of the fuel plus engine weight difference showed an increase in booster gross lift-off weight in the range of about one-half to one million pounds.[3]

For the orbiter, with its small fuel requirement, about 4000 pounds with Jp or 1500 pounds with hydrogen, the engine weight predominates. The fuel weight is only about 1/4 the engine weight for Jp and about 1/10 the engine weight for hydrogen. Thus, for the orbiter it would have been possible to consider the use of a high thrust-to-weight ratio engine having high fuel consumption in order to trade some increase in fuel weight for a reduction in engine weight.

If fuel weight were the only consideration, selection of the fuel would have been straightforward due to the reduction in gross lift-off weight obtained with hydrogen. There were other considerations, however. A hydrogen fuel system with a 500-hr life was not considered an existing technology and thus would require development. This meant a higher development cost and greater development risk than a Jp fuel system. On the other hand, the use of Jp fuel would have required more cost for the heavier vehicle, a larger number of air-breathing and rocket engines, and more rocket propellant. The limited cruise range of the vehicles seemed to imply numerous refueling stops for long-distance flights on ferry missions. Since some of the projected shuttle missions involved removal of the air-breathing engines from the orbiter to increase payload, the orbiter had to be built to allow for relatively easy mounting and removal of the ABES with a minimum of scar weight.

As part of the shuttle technology program, NASA issued study contracts to General Electric and Pratt & Whitney in June 1970. These were for nine month studies of shuttle airbreathing engines using hydrogen, which was the specified fuel at the time. As a result of the subsequent change of vehicle study assumptions to give primary consideration to Jp fuel, these contracts were extended. On the basis of engine performance and vehicle mission studies, the engines selected as prime candidates were nonaugmented versions of the F401 engine, a low-bypass ratio turbofan then under development by Pratt & Whitney, and the F101 engine, a moderate-bypass ratio turbofan developed by General Electric. Design studies of these engines indicated that their modification for the shuttle mission, if Jp fuel was selected, was within existing technical capabilities.

On August 17, 1970 Carl Peterson of the Space Shuttle Project Engineering Office at the Manned Spacecraft Center issued a study change request to remove air-breathing engines from the shuttle system.[5] The Level I requirement to be deleted read

> "The orbiter will be baselined without air breathing engines for orbital operations. The contractors will investigate the optimum installation for flight test and ferry."

This request was made in order to initiate formal discussion of the role of ABES in the baseline design. Peterson did not have the authority to change the requirements himself, but sufficient internal discussion of ABES had occurred that a more extensive analysis seemed warranted. The central argument was that operational analyses had shown that air-breathing engines on the orbiter would add little, if any, additional reliability to accomplishing a safe orbiter landing. Removal of the engines would result in a smaller and less complex orbiter, and would result in a significant reduction in program costs.

The response the next day was another study change request in which managers of the shuttle effort at MSC held off from deleting the ABES outright but decided to direct the contractors to studying this option. Their response was that[6]

> "With the issuance of a cost target for the overall Space Shuttle Program it is necessary to review any and all phase B baselines which can affect total program cost. In June (a study was performed) comparing the technical aspects of total removal of the air breather engines from the orbiter versus a design which permitted early orbital flights with the engines installed yet permitting latter removal with minimum scar weight. At that time, the latter was selected as the baseline."

The issues that the contractors were now to examine included

> "What is the cost benefit to the total program if the air breather engines are deleted now? This assumes a strap on engine installation for ferry and horizontal flight test.
>
> "What would be the effects on vehicle size and configuration? This would be based upon continuation of the 25K baseline payload weight and the 15x60 feet bay size...
>
> "Contractor is also requested to give serious consideration to operational aspects of engine removal. This should primarily concentrate on the landing phase of the missions."

As expected, the test pilots and astronaut crews who would have the responsibility for piloting the returning shuttle orbiter became directly involved in this debate. Donald (Deke) Slayton, Director of Flight Crew Operations, wrote a memo advocating the retention of jet engines for orbiter operations until confidence was gained in the unpowered landing mode. Slayton noted that[7]

> "...those in favor of unpowered operations cite FRC (Flight Research Center, Edwards) and AFFTC (Air Force Flight Test Center) experience in the X-15, lifting body, F-111, and NB-52B programs as adequate evidence that the

> unpowered, piloted landing mode is practical and safe. Certainly, their work in this area is impressive. However, we believe that their experience only indicates that, given the unique conditions of the Edwards environment, unpowered landings can be accomplished safely if the vehicle can be maneuvered through reentry to certain initial conditions relative to the desired landing point. It is not intended, however, to operate the orbiter under the same conditions as exist at Edwards, and the effects of these differences need to be assessed operationally before the decision is made to remove the orbiter engines....the FRC and AFFTC test pilots spend many practice hours in fixed base and free-flight simulators immediately prior to each flight. This provides a degree of proficiency that will not be available to the orbiter crew returning, perhaps, from seven days in orbit."

This view, however, was not widely shared among the larger community of test pilots. They tended to give more weight to the experiences at the Edwards field in lifting body and low L/D landings. By September of 1970, some 72 lifting body flights with significantly less subsonic L/D (4 maximum versus 6 to 8) than the shuttle candidates had demonstrated unpowered and precisely-controlled runway landings. One aspect of the program which aroused special interest, and in some cases alarm, was the use of relatively steep, high-energy approaches for unpowered landings. This technique was appraised as more accurate, safer, and actually less critical than most low-energy approaches. As with a dive-bombing task, the steeper the dive angle, the greater is the accuracy. The test pilots had basically the same problem in positioning their vehicle on a flight path or dive angle to intercept a pre-flare aim point on the ground. They would use a steep approach of about 10-25 degrees. The vehicles were normally flown on the high speed or front side of the L/D curve so that the returns are never short of energy. This energy is modulated to arrive on the desired flight path either by slowing or accelerating, or by maintaining the same speed and using speed brakes to alter the flight path. Speed brakes or similar devices were emphasized as essential items. Their weight is minimal and they require no fuel, but can be used much like engines to vary the landing pattern parameters.

Another factor, also stressed by the test pilots, was the superior handling characteristics of high performance vehicles at the higher speeds where stability is greater and the control surfaces more effective. A 3 to 4 degree, dragged-in, high-power, low-speed approach was much more demanding on the pilot, in addition to being a disaster if the engines failed. This is typical of airline operations where the aircraft is operated on the backside of the L/D curve. The pilot has throttling requirements to concern him as power is the primary means of varying the flight path; the visibility over the nose may be reduced due to the high angle of attack; and more power is required to compensate for degradations in the vehicle's stability and handling characteristics. Errors in the predicted L/D of the new vehicle become significant in a powered, shallow, maximum L/D approach. A ten percent error in L/D is a ten percent error in installed thrust and fuel consumption; factors that directly affect shuttle payload. Using the high energy approach, such errors in the predicted L/D would have no detrimental effect as they are insignificant when compared to the total L/D modulation available.

To document landing accuracy and roll out distances, flight tests at Edwards used a "standard" 10,000 ft. runway on the dry lakebed. The average landing dispersion on thirty flights in 1970 was less than 250 ft. from a preselected point. This accuracy was accomplished from speeds and altitudes as high as Mach 1.9 and 90,000 ft.[8] The vehicles could stop in a mile or less. The criticality of the lifting body approach, flare and landing tended to be overemphasized outside of the Flight Research Center. The USAF Aerospace Research Pilot School graduated about 30 students each year. Each of those pilots were required to demonstrate proficiency in unpowered approaches and landings in an F-104 that were much more critical than the regimes contemplated for the shuttle. Assuming that the shuttle would have reasonable handling and stability characteristics, and the first shuttle pilots were experienced test pilots/astronauts, the FRC tended to downplay the demands of the landing.

As to the question of unpowered, low L/D vehicle operation in IFR conditions, the F-111 was used to demonstrate its feasibility. The F-111 with its variable sweep wing and capability of a relatively large variation in gross weights was used to approximate a wide range of L/Ds and planform loadings. Using only the basic inertial navigational system, coupled with the relatively unsophisticated airborne ILS capability, power-off, low L/D approaches from Mach 2 at 50,000 ft. were conducted. This was twice the speed and altitude then planned for starting the jet engines on the shuttle. The ILS approaches were flown to precise touchdowns on a runway both at night and under a hood (simulating IFR conditions) down as low as 200 to 500 ft. above the ground where the pilot then took over visually to complete the landing. All the pilots felt these approaches to be less demanding than flying a conventional 3 degree, low-speed, powered ILS approach.[9] The reasons were that the higher approach speeds were large enough that the pilots were not concerned with the speed changes associated with flight path control; and operating on the front of the L/D curve allowed the pilot to make glide slope changes with pitch changes only rather than with both pitch and power.

Apprehension about steep approaches in large aircraft was related to the fact that it is not a normal procedure. Usually when a pilot in a large aircraft dives at the ground, he does not know exactly how much altitude is required to pull out because he has not calculated the problem out. In the unpowered approaches flown out at Edwards, the aim point and flare altitude had been checked and the maneuvers practiced. The contention of the FRC was that any skilled pilot could be taught to perform unpowered VFR approaches safely. Onboard or ground guidance systems would only improve this capability and IFR approaches appeared completely feasible with large vehicles. Writing in the 1970 report of the Society of Experimental Test Pilots, Major Jerauld Gentry of the AFFTC summarized the issue[10]

> "I am not proposing that landing engines be eliminated because they are not desirable. My point is that if we don't need them, then additional payload capacity can be obtained. If we can afford engines and still have the payload, then they should be all means be installed; however, I feel most pilots would rather not rely on landing engines to make a successful approach and landing. The shuttle whether it has landing engines or not must be maneuvered unpowered to a point near the destination because the engines cannot be started until the vehicle is subsonic. It seems ridiculous with the demonstrated capability of state-of-the-art terminal energy management systems to maneuver to a position where power must be relied upon to reach the runway. The shuttle should be maneuvered into a position for an unpowered approach. Then regardless of mission induced variations in L/D or whether the engines could be deployed, started and kept running, a successful approach and landing could be made."

The question of the payload penalty that ABES would extract became a crucial factor as designers looked for ways to maintain the shuttle's baselined cargo capacity while minimizing program development costs. Contractor estimates (with engine installation weights estimated at 24% of the engine dry weight) are shown in Figure 2 for several of the orbiters equipped for one-engine-out, go-around capability. The differences in engines and fuel weights reflect the differences in orbiter aerodynamic performance and engine burn time. These results show that providing go-around is at a weight penalty of about 50 to 100% of the payload weight.[11] In lieu of go-around capability, which requires the equivalent of nearly 10 minutes of fuel at full power and a thrust-to-drag ratio of about 1.25, glidepath control by use of power modulation during the approach would provide

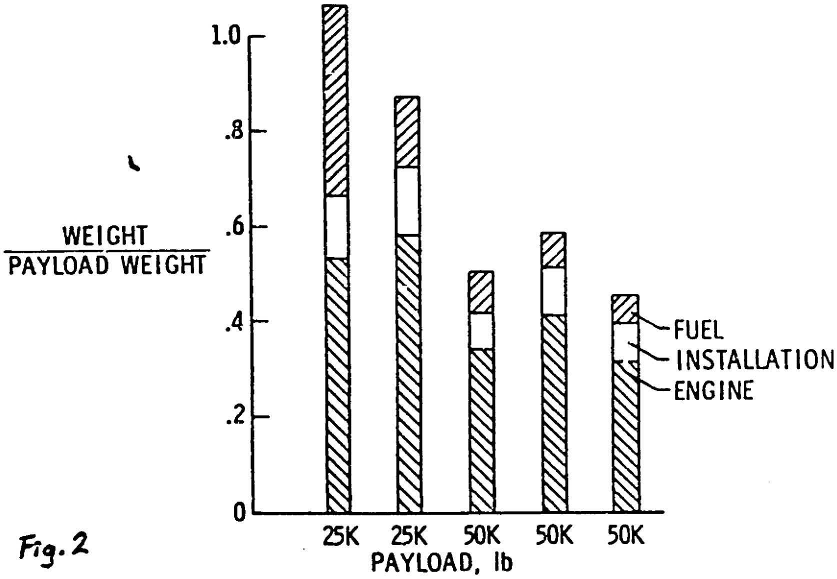

Fig. 2

the pilot with considerable latitude in the touchdown point with an appreciable weight reduction. Research at Langley Research Center had shown that for a vehicle with a subsonic L/D of 4, a standard 3° approach with power requires an air-breathing system weight equal to about one-third of that for go-around. This is equivalent to increasing the baseline payload weight from 25,000 pounds to about 33,000 pounds.[12] With no air-breathing propulsion, the payload weight would be nearly doubled.

The final response by the shuttle program managers to the initial study change request to delete the ABES requirement was to approve it so the baseine orbiter would have no air-breathing engines. Kits were to be designed to add air-breathing engines for flight test and ferry tasks. Analysis of landing operations showed that the minor decrease in risk afforded by providing ABES capability was not justifiable in terms of the payload penalty and the need to cut development costs to a minimum. The remaining justification for air-breathers were flight testing at subsonic speeds and ferry needs. Test pilot experience from the aeronautics sections of NASA and the Air Force showed that safe, accurate landings could be made using low L/D, high energy, unpowered approaches. Experience showed also that aircraft with priority, such as the shuttle, rarely have to execute missed approaches- even under IFR conditions.

Higher priority items in the shuttle program placed ABES considerations on the back burner through 1971 and most of 1972. All contractors were directed to delete the study of integral ABES systems for the orbiter (the manned booster had been eliminated in 1971) and to design removable engine kits.[13] With the development of the modified 747 carrier concept for the shuttle at MSC, the need for the shuttle to ferry itself was eliminated. The use of the 747 also allowed for the curtailment of an extensive horizontal flight test program and the substitution of a less-expensive series of drop tests, similar to the lifting body work, to examine the full-sized shuttle's approach and landing characteristics. Thus even the use of ABES as a removable kit option was eventually dropped from consideration.

## Air-Breathing Engine Systems

1. "Go-around vs. Jet-powered Landing vs. Unpowered Landing Requirements Analysis", C.D. Harris, R.C. Epps, MSC Operational Test Branch- Landing and Recovery Division, 3 October 1969, Internal memo

2. "Shuttle Air Breathing Propulsion", Stewart, Glassman, and Nosek, AIAA/SAE Propulsion Joint Specialist Conference, AIAA 71-662, June 14-18, 1971, p. 2

3. Ibid., p. 3

4. Orbital Requirements for Air Breathing Engines, North American Rockwell internal briefing, May 1970

5. "Removal of Space Shuttle Air Breathing Engines", Carl Peterson, Manned Spacecraft Center Study Change Request 2011, 17 August 1970

6. "Reconsideration of Air Breathing Engine Removal from the Orbiter", Robert Thompson, MSC SCR 2012, 18 August 1970

7. Memo to Manager, Space Shuttle Program from Donald Slayton, Director Flight Crew Operations, 25 August 1970

8. Flight Test Results Pertaining to the Space Shuttlecraft, NASA TM X-2101, October 1970, p. 102

9. Ibid., p. 110

10. "A Lifting Body Pilot Looks at Space Shuttle Requirements", Maj. Jerauld R. Gentry, Society of Experimental Test Pilots, XIV Symposium Proceedings 24-26 September 1970, p. 185

11. "Progress in Technology for Space Shuttle", Robert W. Rainey, Advances in the Astronautical Sciences Vol. 28, Space Shuttle and Interplanetary Missions, 1970 American Astronautical Association, p. 22

12. Ibid.

13. Memo to North American Rockwell- B. Hello from A.H. Atkinson, NASA Contracting Office re: NAS 9-14000 Deletion of Air Breathing Engines on Orbital Flights, 25 October 1972

## Selection of Structural Material

> "Common sense would suggest that reducing the weight... would reduce propulsion requirements and costs."
> -Joel Hirschhorn, Office of Technology Assessment

The determination of a minimum cost structural design for the shuttle orbiter was complex, as one must consider the interactions between the primary structure and the thermal protection system as well as the impact of structure weight changes on overall system weight and cost. The selection of aluminum for the primary structural material was driven by a variety of cost and technical considerations at the contractor level. NASA and the Air Force, along with the other shapers of policy for the shuttle, did not get into the detailed tradeoff studies of the structural material. While they certainly monitored the progress of the contractors' structural designs closely, this particular decision was not the subject of higher-level debate.

A major problem in assessing the relative merits and costs of alternative structural materials is the link between configuration design and these materials. A specific orbiter design may be particularly suited to aluminum, especially with respect to traditional low-cost manufactured shapes and sizes, but not necessarily to other materials. The arguments presented here are derived in large part from interviews with design engineers at Rockwell International who were involved in the original shuttle design. Rather than presenting their detailed analysis, qualitative arguments will show the considerations that led them to select aluminum.

Titanium was the early favorite material technically in shuttle designs for the period 1968-1969.[1] For decades, titanium structures had been used in high-performance commercial and military aircraft, especially where mechanical strength and low weight were desired. The attractiveness of titanium is a combination of a high strength-to-weight ratio and the maximum use temperature at which substantial strength is retained; it is above 600°F, about 250° greater than that accepted for aluminum alloys.[2] Table 1 summarizes some of the properties of aluminum and titanium alloy.[3] The use of composites was minimized due to the lack of maturity with this technology in load-bearing requirements. Composites would be later used extensively in the shuttle payload bay doors, however.

It has been argued that the higher-temperature performance of titanium would have had several advantages. One article claimed[4]

> "If titanium is used as the main structural material, then the thermal loading of the TPS (thermal protection system) can be reduced and a lower weight (5,000-7,000 lbs. less) and cost TPS results. Perhaps of greater significance...is the lower risk of Orbiter failure or malfunction due to some partial failure of the TPS and the concomitant overheating and possible mechanical failure of the metallic structure."

The orbiter is a passive heat sink design that does not use active cooling or a hot structure during reentry heating. Rather it relies on a ceramic layer of tiles to shield the underlying metal structure. The above argument misses two points. The first is that the requirements of the payload bay environment and many installed systems precluded the use of a hotter structure, such as titanium, to take some of the burden off the TPS. Essentially, removal of external insulation on the orbiter means adding a similar amount and weight internally to protect the crew cabin and payload bay (which was required to be able to carry satellites safely back to earth). The second point is that titanium has a lower coefficient of thermal expansion, as it is essentially an insulator as opposed to aluminum which is a heat conductor. If a portion of the TPS were to fail and expose the underlying structure, it might seem preferable to have titanium there rather than

Table I
Typical Room Temperature Properties of Aluminum and Titanium Alloys

| Material | Density ($lb/in^3$) | Elastic Modulus ($10^6$ psi) | Yield Strength (ksi) | Tensile Strength (ksi) | Fatigue Strength (ksi) | Compressive Yield Range (ksi) |
|---|---|---|---|---|---|---|
| 7075-T6 | 0.101 | 10.4 | 73 | 83 | 26 | 40-80 |
| 2024-T81 | 0.100 | 10.6 | 60 | 65 | 24 | 40-80 |
| Ti-6Ai-4V | 0.161 | 16.0 | 165 | 181 | 100-125 | 120-180 |

In comparison, steels have a density of about 0.3 $lb/in^3$, an elastic modulas of about 30 x $10^6$ psi, and a compressive yield range of 150-250 ksi.

aluminum. This is not necessarily so; as a local hot spot on the titanium would tend to stay and build during reentry, while the higher conductivity of aluminum would allow a diffusion of any hot spot over a wider area. Depending somewhat on the type of reentry profile flown and the consequent heating (short, with a high peak temperature or longer with lower peak temperatures but a greater overall heat pulse), the use of aluminum doesn't present any more risk than titanium in terms of TPS failure and possible structural burn-through.[5]

Before the settling of the titanium/aluminum tradeoff, the ceramic TPS approach of Lockheed had been adopted as the most practical approach to providing protection to the reentering orbiter in terms of the risk and time involved in bringing this technology to readiness. A side effect of this technology selection, however, was to prefer the use of aluminum. The bonding of the tiles with the silicone rubbers (or any other glue as well) required to titanium was seen as a very difficult task. Oxide layers on titanium are much less strongly bonded to the underlying material than is the case for aluminum. The bond material temperature between the TPS and the titanium would have been limited to the 500-600°F range at maximum, and perhaps as low as 450°F, due to the aging, softening and general degradation of adhesive bonds at these temperatures. Therefore, there was not a great difference between the maximum operating temperature of protected aluminum or titanium structures. The use of mechanical carrier plates was contemplated for awhile, but abandoned as overly heavy and complex. Since no other TPS system was seen as completable in the time and budget allowed, the better adhesive-taking properties of aluminum made that material the preference.[6]

The major mechanical advantage of titanium is often cited as its high strength-to-weight ratio (see columns 3 and 4 of Table 1). The problem is that a primary structural material must perform in varying environments of tension and compression throughout the vehicle and at different times. A particular problem with titanium is in setting the buckling allowables for its use. The higher density of titanium drove the use of thinner sections to save weight. While this was not much of a problem for areas under tension, the use of thinner sections meant the designer approached the material's buckling limits faster. This is because buckling strength is stronlgy dependent on geometric factors in a particular application. The use of thinner sections means that less cross-sectional area is available to take buckling loads. For shell structures, high-strength, low-density materials are preferred over high-strength, high-density ones. The latter pay off only in areas with high load intensities. The use of lower-density aluminum means that some extra material has to be added to meet buckling limit criteria, but the extra weight is not as severe as the use of titanium and the extra material provides additional heat sink.

Basically, it would have been unwise to use titanium extensively without taking into account the particular environment each piece of material would encounter. In high-load areas, high-strength, high-density materials are justifiable. Examples of this are the use of steel in the landing gears. In areas of moderate loading, high-strength/weight materials such as titanium are desirable. Particularly in fracture-sensitive areas such as the thrust structure and external tank attachment points, titanium is preferred. Some 7,300 pounds are used in the current orbiter. In the general structure and low-load areas, aluminum or composites such as graphite/epoxy are preferred. In areas such as the shell, wings and tail, the major consideration is the buckling allowables. The task for the designer is to blend different materials into an optimized structure which takes account of the overall cost, risk and technical requirements of the vehicle. This is what was eventually done for the orbiter.

The factor which drove so much of the shuttle design, total program cost, also influenced the selection of aluminum. NASA has commented that[7]

> "...the selection of the Orbiter primary structure material was a major decision. This parameter had a direct effect on the weight of the Orbiter structure and the thermal protection system, and was reflected in the weights of the ascent propulsion system (engines, propellant, tanks, and solid rocket boosters). Many materials from aluminum to refractory materials were evaluated...The results of this study...showed that the maximum use of titanium, relative to maximum use of aluminum, would cost in excess of 250 million dollars more for the design and development phase of the Space Shuttle, and in excess of 425 million dollars more for the total program (445 flights over 10 years)."

Titanium lost out to aluminum in large part because of the higher estimated manufacturing costs associated with machining titanium relative to aluminum. In particular, the use of titanium led to a higher peak annual funding requirement. Not only was the titanium material expensive in itself, but its supply was also uncertain. Although NASA did not do a specific analysis of the vulnerability of the shuttle to strategic metals shortages, the use of aluminum was seen by the contractors as a low-risk selection in terms of supply. When the Soviet Union imposed export restrictions on titanium in the early 1970's to meet its internal needs, the price of titanium rose dramatically. If titanium had been a more extensively-required material, total program costs would also have jumped sharply.

While many shuttle designers started out enthusiastic about the use of titanium as a primary material through the phase A studies, the high material and manufacturing costs of titanium identified in phase B dampened that enthusiasm. The contractors and NASA began moving toward baselining a vehicle with an all-aluminum structure, save for proved exception areas. An all-aluminum orbiter design, designated by the Manned Spacecraft Center as MSC 040, was the baseline by the end of the first phase B extension. While it might have been possible for manufacturing costs to be reduced using advanced technologies and/or new titanium alloys, it would have meant greater costs and managerial risks to attempt the creation of advanced titanium manufacturing expertise. After 1972, selected areas of the orbiter were able to achieve significant weight savings by the use of higher-technology composite materials. As mentioned earlier, composite materials made up the shuttle payload bay doors. The same graphite/epoxy was also used for covers to the OMS (orbital maneuvering system) engines. The thrust structure used diffusion-bonded titanium with boron epoxy coverings while the wing trusses used graphite aluminum tubes.

North American Rockwell selected 2124-T851 aluminum for plate and 2024-T86 for sheet in its final response to the shuttle Request for Proposal (RFP). In specific areas considered fracture-critical, such as the cabin, wing spars, and highly-loaded fittings, 2219-T87 aluminum was selected for its superior toughness characteristics (see Figure 1). The material selection logic used is illustrated qualitatively in Figure 2. The progressive screening of various options is an integral part of the classic systems engineering process used in this particular design tradeoff. The optimum material is identified after applying a series of technical and cost constraints with some allowance for the varying levels of risk associated with different options. In the case of the shuttle's primary structural material, the selection of aluminum was made by design engineers for the various NASA contractors as they tried to

# ORBITER STRUCTURE

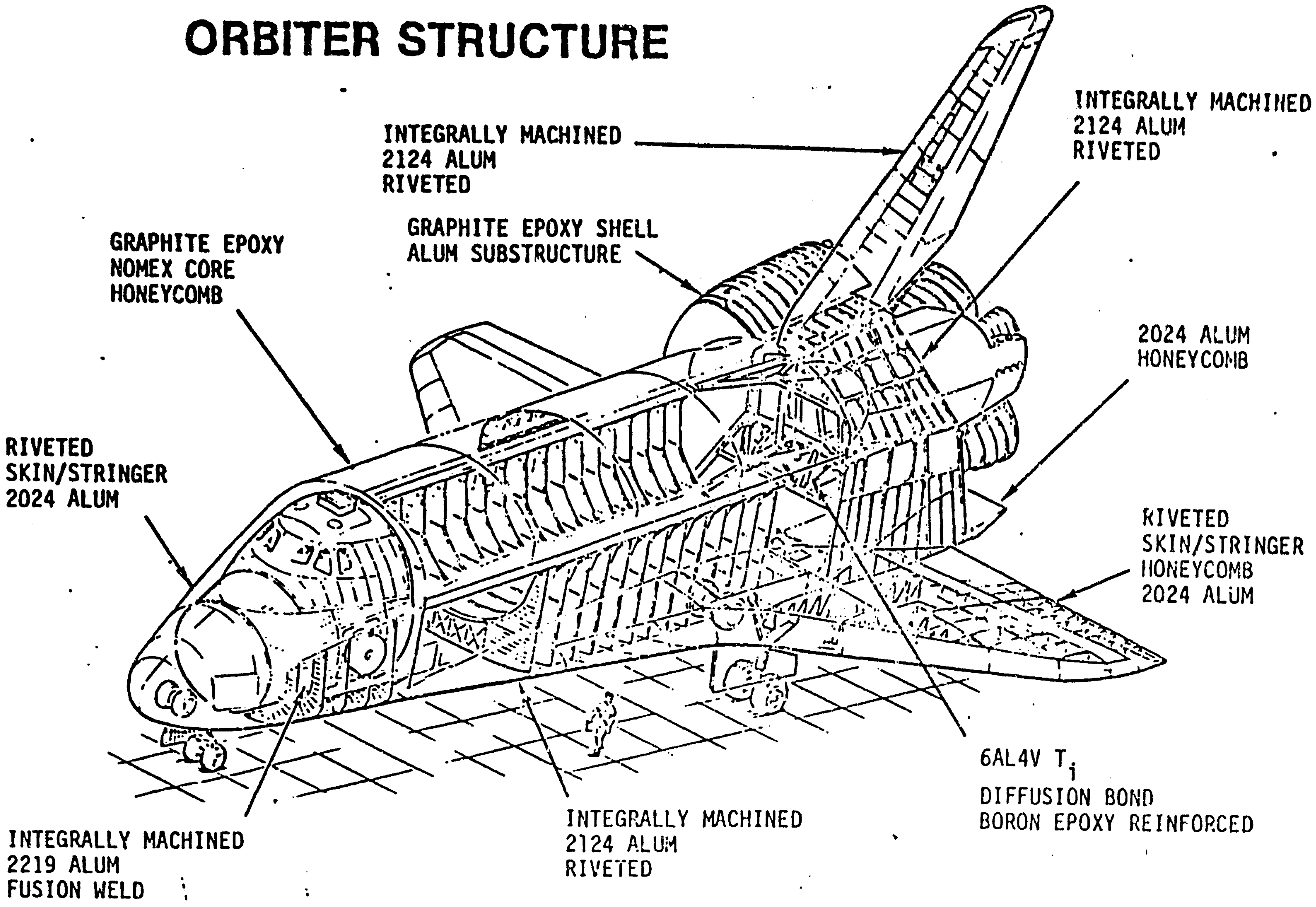

meet the stringent performance, cost and reliability conditions the shuttle had to meet. In this case, a fairly clear set of objectives were met, under the constraints imposed. The technical expertise required to evaluate the selection decision and its seeming obscurity relative to considerations such as payload capability and overall system configuration helped keep this issue at the level of the designers themselves.

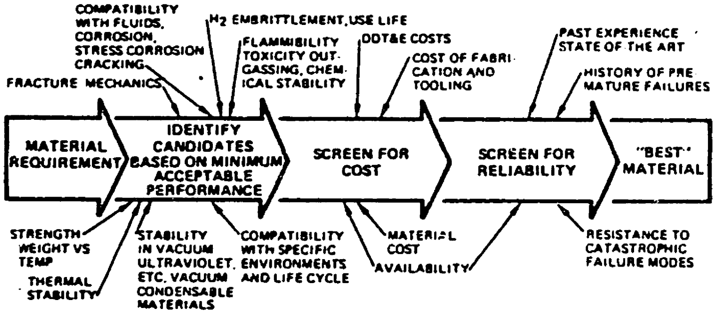

*Figure 2. Material Selection Logic*

## Selection of Structural Material

1. L. Loechel, "High Temperature Metals for Space Shuttle" in Space Shuttle Materials (Soc. of Aerospace Material and Process Engineers, Azuza, CA, 1971) p. 183-200

2. Memo to Roy Thompson, Manager of the Space Shuttle Office, MSC from Roy Godfrey, Manager Space Shuttle Task Team, MSFC 12 March 1971

3. Joel S. Hirschhorn and Anthony W. Giammarise, "Titanium versus Aluminum for the Space Shuttle" SAMPE Journal, Jan.-Feb. 1980 p. 14

4. Ibid.

5. Interview with Tom Healey, Rockwell International, 28 January 1972

6. It was possible to use an ablative TPS, but the refurbishment costs estimated meant high operating costs that were unacceptable to NASA.

7. Letter to Senator William Proxmire from Joseph P. Allen, Director, Legislative Affairs Div., NASA 26 January 1978

8. North American Rockwell, Space Shuttle Program Technical Proposal, Vol. III, 12 May 1972, SD 72-SH-50-3 p. 3-25

I have come across men of letters who have written history without taking part in public affairs, and politicians who have concerned themselves with producing events without thinking about them. I have observed that the first are always inclined to find general causes, whereas the second, living in the midst of disconnected daily facts, are prone to imagine that everything is attributable to particular incidents, and that the wire they pull are the same as those that move the world. It is to be presumed that both are equally deceived.

Alexis de Tocqueville

# CONCLUSIONS

Critics of the space shuttle contended that it was not a sensible undertaking as its large costs would effectively foreclose other, more valuable, space activities or that the money could be spent on other national needs. NASA and the DOD argued that the shuttle would provide the United Stated with a basic operational capability that would, in the long run, save the taxpayer money while providing the opportunity for a large variety of manned and unmanned missions. Both points of view are concerned with the best alternatives for the future.

In some ways the arguments over the shuttle were reminiscent of the controversy over Apollo. Some saw the shuttle, as they did Apollo, as an unnecessary expense when funds were needed for domestic and urban problems. Fiscal conservatives worried about the large expenditures involved. Scientists questioned what role science projects would have, while fearing that the costs of the shuttle would take up so much of the NASA budget that their ideas would be cancelled or delayed.

Despite similarities, there are two major differences between the controversies of Apollo and shuttle. First, Apollo was designed to implement an overriding national goal. It was justified on grounds of national prestige, security, and international competition. The shuttle is not tied to a single national goal. The shuttle did not recieve the national support (or even the attention) of the Apollo decision of 1961. The sense of national commitment with Apollo is largely missing with the shuttle.

Second, Apollo was developed largely during a period of rising space expenditures that accommodated both manned space flight activities and a relatively large science program. It was not until the late 1960's that cutbacks on science activities were required to provide funds for Apollo. The shuttle, on the other had, was (and is) being developed under conditions of severe budgetary stringency. NASA expenditures are held constant or are reduced in real terms, placing more pressure on science activities in order to keep the shuttle program going. Instead of a mission goal (going to the moon), NASA has an operational goal (get the shuttle flying).

Examining the case of NASA and the shuttle brings up the relationship between administrative and national levels of policy. NASA might have wished to follow Apollo with a program aimed at landing a man on Mars, but this notion was contained by the national priorities of the 1970's. It remained a NASA plan, but did not emerge as a program. There was no overt national policy decision to terminate the manned exploration of the moon, yet by the failure to initiate a follow-on effort, the lunar program was cancelled. The need for the shuttle had to be rationalized, not in terms of manned exploration, but in economic terms and utilization for earth applications missions. What occured was a shift in national attitudes toward space and NASA. NASA had no choice but to adapt its programs and priorities to a lessened role on the national scene in order to ensure its survival and protect its options for the future. It chose to concentrate its diminished power behind certain key projects, particularly the shuttle, and allowed others, such as NERVA, to be terminated by the pressure of outsiders (in this case OMB).

The wide range of debate the initiation of the shuttle program underwent was exceptional for a NASA program. Rather than being an Executive Office decision as the case with Apollo, shuttle involved a much broader range of interests. However, this expansion of the usual debaters of space policy did not go as far as with other large technical government programs such as the ABM and SST. In those cases, public interest groups and the media helped enlarge the debate to discuss broader questions of national security and environmental hazards. The shuttle did not undergo such public scrutiny. To liberal critics in the Senate, the shuttle was seen as an example of misplaced priorities, not an evil in itself. The few vocal opponents to the shuttle from the scientific community were unable to sway a significant segment of public opinion to create a debate on the relative importance of manned or unmanned space efforts. The lack of intense public interest allowed for containment of the debate within the government and its contractors. Thus while much attention was given to details of various shuttle configurations and many of the participants certainly brought their own images of the likely future of space; these images were never made explicit and then subjected to the same detailed analysis as the shuttle vehicle itself. In other words, the shuttle was approved, as a means for operating in space, without any extensive debate over what the goals of space operations in the 1980's might be.[1]

Mathematica, in its response to NASA, continually made the point that[2]

> "any expenditure of public funds must be justified...by the aims and purposes of the expenditure. Technological possibilities alone carry no conviction, though they often bring new possible aims into sight and reach. Whatever their nature and origin the different aims must be hierarchically ordered and must find their place in the system of national priorities."

Senator Mondale also raised the question of purposes, saying[3]

> "First, NASA presented the shuttle and station as a joint project--with the shuttle serving as a logistical truck to the station; then, NASA claimed that the shuttle had been "decoupled" from the station...Underlying NASA's shifting position on the shuttle and its obfuscation of the role of the station is one central fact: NASA has persistently refused to confront the basic policy questions of what we expect to achieve in space, for what purpose, and at what cost."

These questions of purpose were studiously ignored. There were various mission models showing the numbers and kinds of payloads the shuttle would carry and NASA continually emphasized the number of earth applications missions that would be flown.

The Air Force praised the shuttle as a useful vehicle that would serve the cause of national security. The aerospace industry noted the economic benefits that a shuttle program would provide to state and local communities which had suffered from the recent slump in aerospace orders. However, after the cool reception that greeted manned Mars and space station proposals, NASA did not claim any overarching goal for itself aside from making space operations "routine". Manned Mars plans were dropped and space station placed on a backburner. NASA emphasized the econimic value of the shuttle in an environment which was hostile primarily to the cost of the project and not the project itself. NASA was concerned with its survival as a leading R&D agency with a commitment to spaceflight. Its strategy was to win approval for the shuttle in order to both maintain its status and procure a capability that would leave open a variety of future space development options.

An initial reaction to a massive R&D project that did not have a clear scenario for the future as part of its justification might be to surmise that the project has no clear justification. This was certainly the viewpoint of the more critical Senators and scientists. In which case it is quite understandable that NASA wouldn't declare an overarching goal. Another reaction could be that there were military reasons for the shuttle that could not be discussed openly and again it would be understandable that NASA would not discuss the purposes of shuttle-supported space programs. Neither of these reactions is quite correct. NASA correctly perceived calls for a single goal for the shuttle program as a trap. Declaring such a goal then, be it space industrialization, an expanded military presence, a world-wide environmental monitoring system, etc., it would have provided a clear target for its critics to rally about. Discussion of the purpose of the shuttle program would easily lead to questions of the overall worth of space activities in general. This would have enlarged the debate beyond mere economic and technical issues. NASA was unwilling to lose what control of the debate it did have. Its use of Mathematica's cost-benefit analysis and the combined technical resources of itself and the Air Force could hold off attacks by the OMB and Congress on relatively narrow grounds, but only so long as its opponents kept to the tacitly agreed agenda of determining the economic value of a shuttle and the most cost-effective design.

The budget process served as the basis for the public agenda on shuttle. The level of spending on military and space-related programs relative to various social concerns was seen as representative of misplaced national priorities by critics of large, new technical government endeavors. The shuttle was not presented as being crucial to our national security or prestige; issues which might have transcended the requirements of the budget. The shuttle would instead require a substantial commitment of funds over a period of years at a time of increasing fiscal conservatism. In this context, the various partisan analyses of the program were carried out.

Persuasive analysis usually works to the degree people are genuinely persuaded by it. Yet it sometimes achieves an effect without actually persuading. As Lindbloom has noted in his book The Policy-Making Process:[4]

> "Administrative policy makers, for example, sometimes follow the tacitly accepted rule that certain kinds of issues are to be considered settled by a competition of analysis. In effect everyone agrees not to go further than that, that is, not to fight harder than with fact and analysis, because escalation beyond that point would demand too much time and energy and would incur too many more risks. The result is that by rule all accept certain solutions, not becuase actually persuaded of their merits but simply because they have agreed that the decision goes to those who have, by conventional standards, made the best case."

Certainly this was the case with OMB, where NASA brought out cost-benefit analyses and projections of traffic demand. This was the case when the aerospace industry produced figures showing the indirect benefits of shuttle contracts to local communities. In order to gain and keep support, shuttle proponents adopted a mix of strategies keyed to the various interests which composed the supporting coalition they sought to assemble. To the aerospace industry went the incentive of lucrative contracts. The Air Force was promised new operational capabilities. Congress was assured of the usefulness of the earth applications and science programs the shuttle would support. The White House was told of the dire problem of aerospace unemployment while the OMB was assured of the overall cost-effectiveness of the program.

Various techniques are available to an agency seeking to maintain support for a program in the bureaucratic environment. Harvey Sapolsky identified four strategies:[5]

> "1. Differentiation - attempts of organizations to establish unchallengable claims on valued resources by distinguishing their own products or programs from those of their competitors."
>
> "2. Co-optation - attempts of an organization to absorb new elements into its leadership or policy determining structure...as a means of averting threats to its stability or existence."
>
> "3. Moderation - attempts of organizations to build long-term support for their programs by sacrificing short-term gains."
>
> "4. Managerial Innovation - attempts of an organization to achieve autonomy in the direction of a complex and risky program through the introduction of managerial techniques that appear to indicate unique managerial competence."

The shuttle program included all four of these elements. The shuttle was presented as having new capabilities that conventional boosters could not provide. When criticism focused on the economic value of the program, NASA (initially under OMB pressure) used cost-benefit analysis with a then very conservative discount rate of 10% to sell its case. NASA retreated several times from more ambitious space program scenarios, but always with shuttle remaining as the top priority program.

The extensive analysis of alternate shuttle designs allowed NASA to convincingly demonstrate that it had examined every possible approach to building a space shuttle and had come up with the most efficient program outline.

Throughout the debate over shuttle, several of the key participants were successful in keeping their own "hidden agendas" from extensive discussion. A "hidden agenda" refers to priorities an organization may have in a conflict, but which are not openly declared and incorporated into the conflict as a subject for discussion. NASA avoided the debate over whether a manned or unmanned space program was more worthwhile by showing the manned shuttle as useful in a variety of earth applications and science missions that in earlier years would have flown as automated vehicles on unmanned boosters. While avoiding the issue of 'man vs. black box', NASA was thus able to maintain a manned space flight capability. That NASA felt an agressive manned space flight program was worthwhile can be seen in the results of the September 1969 Space Task Group Report (manned Mars missions, space stations, shuttle, etc.). The engineers and advanced planning did not cease to feel manned flight was worthwhile merely because the scope of their proposals ran into severe opposition. Instead, the justification for shuttle was shifted to deemphasize its manned role and concentrated on the vehicle as transportation, not exploration. The advent of routine manned flight would however allow for the possible later expansion of manned space activities; thus NASA met its own desire to continue manned activities without having the subject of man-in-space decided on by other policy-makers.

Analysis of the economic impact of a shuttle program on state and local communities, particularly California, helped the White House to decide on its position on the project. While OMB was allowed to pressure NASA into a smaller overall program with lower peak funding requirements, some form of the shuttle program was almost certain to be approved by the Executive branch.[6] The domestic policy staff under John Erhlichman and Nixon himself were concerned with the aerospace unemployment problem in crucial states such as California with the upcoming 1972 election. The failure of in-house efforts to turn up appealing large R&D projects outside of space and defense may have helped the conclusion that a shuttle program, while not immediately costly to the budget, would show a depressed industry that the Administration was concerned with them and willing to go ahead with projects to their benefit. With the cancellation of the SST and the slump in new aircraft orders, the aerospace industry hailed the Nixon decision to go ahead with shuttle. The White House was thus able to meet its budgetary requirements by using OMB, while taking credit for helping the unemployed before an election. The size of the budget was extensively debated, but the also crucial issue of unemployment with an approaching election was not incorporated as part of the overall justification for shuttle. The role of the shuttle in the Nixon reelection campaign was part of the White House's "hidden agenda".

A third participant with a "hidden agenda" was the Air Force. A policy of carrying out the civilian and military space programs of the United States separately had existed from the earliest satellite launchings. Earlier attempts by the Air Force to have its own man-in-space program had failed for a variety of reasons. With the shuttle, however, NASA and the Air Force entered into a period of closer collaboration with the military adding its payloads to the traffic the shuttle would carry and NASA making design changes to accomadate military needs. This mutual effort helped to sell the shuttle to Congress and added to the overall arguments of its cost-effectiveness. While NASA's role in space was chartered by the 1958 Act creating the agency, the military role in space had grown out of its larger concern with national security. The military use of space had grown with a minimum of oversight and with its special role in the shuttle program, the DOD had found a way to have a manned presence in space. The uses of military man-in-space, the capabilities of payload retrieval, and routine space access did not have the same priority as programs like B-1 and F-15. By collaborating with NASA, however, the Air Force was able to have a large say in the nature of space transportation for the coming decade while not having to devote significant resources to selling a separate military program. The Air Force was able to insure its needs were met while avoiding an open policy debate of just what the military's role in space would be for the 1980's.

## Shuttle Design

An examination of the shuttle's design development shows that the design process was carried on several different levels. Participants in the process were influential in various parts of the program, with all of their actions affecting the estimated costs, risks, capabilities and political acceptance of the shuttle proposal. The question then arises as to how to best view this dynamic process and explain why the drivers in each of our design tradeoffs dominated as they did. We can see about four levels to the formation of design requirements. The first level constitutes the general social-political environment and provides the context in which the new R&D program is to be carried out. The second level consists of those design requirements imposed by the prime customers of the R&D work. The third level consists of those requirements imposed by the contractors carrying out the work. The fourth level represents those requirements which inherently exist due to the limits of engineering/manufacturing practice. With these various levels, there are five general ways in which decisions on the design requirements are made.

These are 1) positioning on the political agenda; 2) institutional barginning; 3) use of external experts (e.g. consultants); 4) internal experts; and 5) classic systems engineering. We can form a matrix of these categories and classify our tradeoff studies (figure 1). Each of the tradeoffs examined are summarized in the section below.

Since we are interested in design choices, those design requirements dictated by the state-of-the-art were not examined; thus the line for Inherent Requirements is blank. If we did have some crucial design requirement dictated by state-of-the-art, it would probably be classified in the Internal Experts or Engineering column. At the other extreme, it is unlikely that priorities on the political agenda would be set by customers or contractors. The setting of the political context for the shuttle, in the form of a tight budget, was imposed by the political authorities of the Congress and the Executive. As for the specific cases examined in the previous five sections we have:

### Tradeoff Summary

Payload diameter - driven by the size of space station module sections, desired by NASA to keep the option of a later space station program open to using the shuttle.

Payload length - driven by requirements of the DOD-NRO for reconnaissance satellites and agreed to by NASA. NASA had a few interplanetary missions that would also need the long cargo length.

Payload weight - driven by DOD requirements to be able to place 40,000 pounds into polar orbit and joint NASA-DOD desires to be able to place 5,000 pounds in geosynchronous orbit with a space tug. These weights were considered to be the typical maximums for missions through the 1980's.

Cross-range - driven by Air Force desires to return to Vandenburg AFB after a one-orbit mission to low earth polar orbit.

| | Design Shapers | | | | |
|---|---|---|---|---|---|
| Design Level | Priority Level | Bargainning | External Experts | Internal Experts | Engineering |
| Political Context | Dev. cost<br>Funding peak | Payload size weight | TAOS | | |
| Customer Imposed | | Payload size weight<br>Cross-range | TAOS | ABES deletion | |
| Contractor Imposed | | | | | Aluminum selection |
| Inherent Requirements | | | | | |
| Participants | Executive/OMB<br>Congress<br>PSAC | NASA-HQ<br>Air Force<br>OMB | Mathematica<br>Flax Comm.<br>OST | Edwards FRC<br>NASA-MSC | Industry<br>NASA-MSC |

Figure 1

This mission was then known as Basic Reference Mission 3. All of the above specifications for the shuttle were agreed upon as the result of NASA-Air Force collaboration on the probable mission model the shuttle would be serving in the 1980's. The shuttle was designed to handle the most demanding, realistic missions then envisioned. Other designs with less payload capability or cross-range were rejected by NASA and the Air Force as not being able to fulfill the objective of taking over all space transportation needs. Pressures by OMB and the OST to look at smaller or less capable designs were resisted by NASA/Air Force claims of superior technical expertise in sizing the shuttle.

System Configuration - driven by OMB restrictions on the NASA budget, NASA had to minimize development costs and hold its peak annual funding requirement to $1 billion (1970 dollars) or less for the shuttle. NASA held out for a fully reusable design through the middle of 1971 while the OMB pushed for smaller, less sophisticated designs which both NASA and the Air Force found unacceptable. A compromise solution was identified by the cost-benefit analysis of Mathematica. The analysis of the economics of different shuttle configurations identified the TAOS approach as the economically prefered option. In addition, TAOS allowed the retention of the capabilities (noted above) that had been agreed to by NASA and the Air Force. This was a case of external experts intervening where institutional bargainning had failed to make progress.

Air-breathing Engine Systems- the initial desire by designers for this capability was driven out by the need to minimize program cost and conserve payload weight capability. The work of Air Force test pilots from the Edwards Flight Research Center showed low L/D, high-speed, unpowered landings to be practical. This was a case where internal experts provided the basis for a major design change which lowered program costs without a degradation in operational capability or an increase in risk.

Aluminum Structure- driven by classic systems engineering and design optimization. Aluminum allowed the production of the lowest cost, lightest structure at least risk for the technical abilities then available. Arguments for the more extensive use of titanium fail to account for the need to match materials to their optimal environment. There are sections of the shuttle where titanium was an optimum choice and is therefore used. The selection of aluminum as the primary material was made by industry-level designers with extensive space and aircraft experience and not challenged outside of the industry.

The OMB and OST focused on alternative hardware developments, not on changing the way NASA and its contractors managed their programs. The shuttle program sizing was discussed in terms of its capabilities and cost. Only rarely did the budget managers discuss the technology choices (e.g. types of thermal protection systems, avionics options, shuttle main engine design), which presented the areas of largest cost and risk uncertainty. In areas where they lacked technical competence, OMB and OST would generally accept NASA's judgements and estimates. With issues that wre easily comprehensible, however, such as what size the payload bay would be, there was extensive debate and suggestions of alternatives. The argument would be that the general size of the vehicle would affect the overall development and operating costs. Whether the development of needed new technology (i.e., the main engines and the thermal protection system) would be a more sensitive cost factor was not examined.

In examining the files of NASA headquarters and the Manned Spacecraft Center on shuttle, there is an obvious difference in the nature of the materials. In Houston, with the Shuttle Office concerned with the progress of the contractors, the working level material is predictable, bureaucratic and with little mention of politics. The interactions with the Air Force are steady and seemingly unobtrusive. The organization is engaged in classic systems engineering on a challenging R&D problem. There is an insulation from lobbying, Congressional briefings, and OMB examiners. In Washington, higher level politics are a day-to-day concern; becoming particularly acute in the phase B extensions. The large technical issues, such as payload bay size and weight requirements and crossrange, come up very early and provide a background that most everyone is aware of. The more subtle managerial, costing and political problems are not always recognized early enough to be worked into an overall strategy. Thus there is a tendency for the organization to go from one urgent problem to the next. There is a system of consensus building on technical issues, a striving to reach a general agreement on the design requirements of the vehicle. There is not a comparable process to determine what vision of the future the shuttle is to support. Possibly because such a vision is viewed as unnecessary in an agency where almost everyone agrees that the shuttle is the obvious "next thing", there is a reluctance to respond to non-technical realities that are imposed (such as budget limits). NASA fought heavily to get approval for the shuttle project and gave up its larger program proposals unwillingly. Yet in the case of the shuttle, the adversary process resulted in a program several billion dollars cheaper and with lower technical risks than originally envisioned while retaining most of the desired capabilities.

Overall, we can see a changing mix of politics, management choices and engineering throughout the shuttle design process. In conventional case studies of aerospace vehicles, design constraints are given with respect to a clear set of objectives. The study then goes on to show how the final design was achieved through a series of tradeoffs and systems analyses. The paradigm assumes little, if any, interaction between the engineer and the generation of the design specifications. In particular it treats the formulation of the vehicle's objectives as unrelated to the design process itself. The case of the shuttle shows politics and economics as integral parts of the systems design of the vehicle. Management and policy decisions, not technological inevitability, determined the shuttle design. The problem for the designer is to maintain flexibility in a rapidly changing environment. The real design process is quite different from the static, optimized solutions of the case study.

A rational, hierarchial ordering of goals and constraints, as Mathematica might have wished, for determining the place of the shuttle in the system of national priorities did not occur. Instead a complicated process of conflict and cooperation among various policy-makers shaped the shuttle in which the need to reach an agreement overrode conflicting goals. The shuttle system is the result of a series of compromises, both technical and political. It is the result of policy-making which tried to be both rational and democratic.

## Conclusions

1. John M. Logsdon, "The Space Shuttle Decision: Technology and Political Choice," in the Journal of Contemporary Business, Vol. 7, No. 3, 1978, p. 27.
2. Klaus Heiss and Oskar Morganstern, "Factors for a Decision on a New Reusable Space Transportation System," memorandum to James Fletcher, 28 October 1971, p. 10.
3. Letter from Walter F. Mondale to the U.S. Senate, Committee on Aeronautical and Space Sciences, 25 April 1972.
4. Charles Lindbloom, The Policy-Making Process, 2d Ed., 1980, p. 31.
5. Harvey Sapolsky, The Polaris System Development: Bureaucratic and Programatic Success in Government, 1972, p. 43.
6. Logsdon, op cit, p. 23.

# APPENDIX

## NASA Phase Planning

Since NASA is an R&D agency, it is often difficult to specify the details of a procurement contract for new spacecraft from the beginning. To deal with this problem, NASA uses a phased planning effort which attempts to define the details of new R&D endeavor (such as the shuttle) as much as possible before the actual production of final hardware. Consisting of four general phases, with each phase being complete before proceeding to the next one, the effort is a competitive one with contractors bidding for the earlier phase efforts in order to stay eligible for the more lucrative later ones. The process of contractor competition eliminates companies at each stage, with those companies which fail to win the prime development contract then generally competing for subcontracts from the winning company.

Phase A - Preliminary Analysis. This is primarily an effort undertaken in one or another NASA facility to analyze alternate overall project approaches or concepts for accomplishing a proposed technical objective or mission. It attempts to determine if a given mission objective is achievable. It identifies from the more promising concepts that may have been examined in an earlier advanced mission study effort, those project approaches worthy of further refinement. Phase A identifies project elements such as major facilities, operational and logistical support, and advanced research and technology effort required to support the proposed project. Contracted effort is normally limited to auxiliary studies in direct support of in-house NASA analyses.

Phase B - Definition. This involves detailed study, comparative analysis and preliminary system design directed toward facilitating the choice of a single project approach from among the alternate approaches generated by phase A activity. Also included in this effort is an identification of facilities, logistics, operations and additional advanced development tasks required to support the selected approach. The major effort is accomplished through contracted studies which provide the data necessary for the selection process and in turn determine the nature of the next recommendation to NASA management.

Phase C - Design. This entails the detailed definition of the objectives and final project concept. System design with mock-ups and test articles of critical systems and subsystems are undertaken as necessary to assure that hardware is within state-of-the-art limits, that technical milestone schedules and resource estimates for phase D are realistic, and that definitive contracts can be negotiated. Also included is the identification of alternate or back-up system/subsystem development requirements.

Phase D - Development Operations. This covers final hardware design and development, fabrication, test and project operations. This phase is almost always done by the contractor who won the phase C contract. In some cases a joint phase C/D award is made to a prime contractor who then subcontracts major portions of the work while maintaining overall integration reponsibility.

It is important to remember how difficult it is to predict the detailed nature of systems to fulfill requirements that had never existed in the past. Particularly in spacecraft development the approach itself is invented, not just the techniques and equipment needed to carry out the mission. Even after this there is often the need to develop new manufacturing methods and/or materials. As each program activity passes through the various steps from definition to operation, the ability of managers to understand the many ramifications of the project increases. This in turn means that time and resource needs can be more realistically estimated. The intent is for forward planning to become a continually iterative process as the R&D task proceeds.

# SPACE SHUTTLE CHRONOLOGY

| | |
|---|---|
| 1969 | |
| Jan. 31 | NASA awards four contract each valued at $500,000 to Lockheed (MSFC), General Dynamics (MSFC), McDonnell Rouglas (LRC, later to MSC), and North American Rockwell (MSC). Contractors to conduct parallel studies of an Integral Launch and Re-entry Vehicle (ILRV) to be concluded Sept. 1969. NAR examined clustered or modular reusable flyback elements and later the expendable tank concept. GD studied the use of expendable tanks and modularized solid propellent stages. McDAC concentrated on the "Triamese" configuration and reusable flyback stages. |
| Feb. 13 | President Nixon issues a memorandum to the Vice-President, NASA and DOD, for a definitive report on future space goals. Chairman- Spiro Agnew; Members: Robert Seamans, Secretary AF, Thomas Paine, NASA Administrator, Lee Dubridge, President's Science Advisor; Observors: U. Alexis Johnson, Undersecretary of State, Glen Seaborg, AEC Chairman, Robert Mayo, Director BOB. |
| Feb. | Martin Marietta conducts a company-funded study with MSFC on feasibility of the shuttle in parallel with contracted phase A studies on ILRV. |
| | MSC begins in-house studies on the straight-wing, two-stage, fully reusable concept. |
| Apr. 5 | Space Shuttle Task Group formed in the OMSF at NASA headquarters. |
| Apr. 29 | Lockheed, GD, McDAC, and NAR begin phase A studies of the ILRV. |
| Apr. | NASA/DOD begin a 3 month study to assess the degree of commonality of the shuttle concept for dual service to both agencies. |
| | President Nixon establishes a joint NASA/DOD study group to evaluate the possibility of a vehicle for both agencies. |
| May 5 | George Mueller, NASA Associate Administrator for Manned Space Flight, holds briefing for possible shuttle contractors. |

| | |
|---|---|
| May | Summary Report issued by the Space Shuttle Task Group covering system design, operations and missions. |
| Jun. 15 | NASA/DOD space transportation group issues a joint report endorsing the possibility of using one vehicle for both agencies. |
| Jun. 20 | NASA issues a revised study plan for phase A ILRV work with a supplementary payment of $150,000 to each of the four contractors. McDAC receives an additional $225,000 for analysis of the fully reusable concept. Lockheed, GD and NAR are also oriented toward this approach. |
| Jul. 1 | FY 1970 begins with shuttle appropriations of $12.5 million. |
| Aug. | Future NASA Space Programs: Hearings before the Committee on Aeronautical and Space Sciences, Senate. |
| Sep. 1 | Space Task Group presents its report to the President recommending an operational shuttle by 1975-77 depending on funding levels. |
| Nov. 1 | Initial phase A ILRV studies from McDAC, NAR, GD and Lockheed are completed. Martin Marietta also presents its internal studies to NASA. |
| Nov. 12 | Rep. Karth speaks before the National Press Club, opposing the linkage of manned Mars, space station and shuttle goals in the STG program plans. |
| 1970 | |
| Feb. 17 | A joint NASA/USAF Space Transportation Committee is established to preserve the interests of both agencies. |
| Feb. 18 | NASA issues RFP for phase B studies of a fully reusable shuttle. |
| Feb. | Manned Space Flight- Present and Future. Staff study for the Subcommittee on NASA Oversight of the Committee on Science and Astronautics, House of Representatives. |
| Mar. 7 | President Nixon issues a policy statement on future space goals and gives priority to a reusable space transport. |

| | |
|---|---|
| Mar. 30 | Phase B proposals submitted to NASA. |
| Apr. 23 | Karth amendment opposing shuttle funding defeated in the House, 53-53. |
| May 6 | Anti-shuttle amendment sponsored by Sen. Mondale defeated 29-56. |
| May 12 | NASA announces selection of NAR and McDAC for parallel 11 month studies, phase B, of a fully reusable shuttle. Each contract valued at $10.8 million. |
| Jun. 4 | NASA issues a funded contract to Mathematica Inc. for an economic analysis of the shuttle system. |
| Jun. 15 | NASA announces award of 11-month phase A feasibility studies on alternative shuttle designs to Grumman/Boeing, Lockheed and Chrysler. Grumman/Boeing receive $4 million to evaluate a stage-and-a-half shuttle with expendable propellent tanks, a reusable orbiter with expendable booster, and a reusable orbiter using J-2S engines and solid propellent auxiliary boosters. Lockheed with $1 million, is to study an expendable tank orbiter. Chrysler with $750,000 is to study a single-stage reusable orbiter. Grumman/Boeing are managed by MSC. Lockheed and Chrysler managed by MSFC. |
| Jun. 18 | Shuttle presentations held for SAMSO/Aerospace Corp. in El Segundo, California. |
| June. 19 | NAR and McDAC commence phase B studies of shuttle. |
| Jul. 1 | FY 1971 begins with shuttle appropriations of $80 million from Congress. |
| Jul. 6 | Anti-shuttle amendment by Sen. Mondale defeated 28-32. |
| Jul. 30 | Statement of Work issued for study of DOD impact on shuttle system design. |
| Sep. 15 | Tom Paine resigns as NASA Administrator. George Low takes over as Acting Administrator. |
| Oct. | Rand Report on "The Space Shuttle as an Element in the National Space Program" issued. |
| Nov. 30 | Grumman/Boeing brief NASA on mid-term phase A studies alsong with Lockheed and Chrysler. |

| | |
|---|---|
| Dec. 7 | Anti-shuttle amendment by Sen. Mondale defeated 26-50. |
| Dec. 10 | NASA announces MSC and MSFC modification of the NAR and McDAC definition contracts to include $2 million study of structural testing, in addition to a $500,000 study of expendable stages, and a $300,000 DOD study on Air Force requirements. |
| Dec. 11 | NASA holds mid-term review for phase B NAR and McDAC studies. |
| Dec. 23 | Separate shuttle office created within the OMSF at NASA headquarters. |
| Dec. | The National Space Program- Present and Future. A compilation of papers prepared for the Subcommittee on NASA Oversight of the Committee on Science and Astronautics. |
| 1971<br>Jan. | Space Shuttle- Skylab, Manned Space Flight in the 1970's. Status Report of the Subcommittee on NASA Oversight of the Committee on Science and Astronautics, House. Input from NASA headquarters, field centers, and contractors. |
| Jan. 20 | End of a two-day conference in Williamsburg, Virginia. Single set of design characteristics established. The delta-wing, high cross-range design was selected with a 65,000 lb. payload capability into a due east 100 n.m. orbit. |
| Jan. 28 | Acting Administrator Low denies any NASA plans for a manned Mars mission in Congressional hearings. |
| Feb. | Boeing tentatively proposes an external $LH_2$ propellent tank for the orbiter. |
| Mar. 1 | NASA issues RFP's to Aerojet Liquid Rocket Company, Pratt & Whitney and Rocketdyne for shuttle main engine development. |
| Mar. 11 | James Fletcher takes over as NASA Administrator. |
| Apr. 1 | NASA instructs NAR, McDAC, and Grumman/Boeing to study expendable external $LH_2$ tanks for the orbiter. |
| Apr. 20 | NAR Rocketdyne Division submits its proposal for the shuttle main engine. |

| | |
|---|---|
| Apr. | NASA reviews 9 month results from phase B studies. |
| May 31 | First Mathematica Report shows the fully reusable shuttle as barely cost-effective. |
| Jun. 1 | Mathematica presents an interim report to NASA on its economic analysis of shuttle configuration options. |
| Jun. 10 | NASA announces management plan for the shuttle. Overall management will be at NASA headquarters OMSF; MSC will manage the orbiter and system integration, MSFC will be responsible for the booster portion and the msin engine, and KSC will be responsible for launch and recovery facilities. |
| Jun. 16 | NASA announces its interest in a phased approach to the shuttle with a manned flyback booster deferred and an interim booster of conventional configuration providing early orbital flights. Contractors to study modified Titan II and solid propellent boosters. |
| Jun. 30 | Lockheed presents their final report on a Payload Effects Analysis indicating multi-billion dollar cost savings for payloads designed to use the shuttle. Savings are due to increased reliability, loosening of volume and weight constraints, and the more benign launch environment. |
| Jun. | At the conclusion of the initial 11 month phase B effort, only reusable high cross-range designs remain. External $LH_2$ tank studies made for a slightly smaller McDAC design. |
| Jul 1 | NASA announces phase B contract extensions to NAR and McDAC, with parallel uprated study contracts awarded to Grumman/Boeing and Lockheed. Contractors to study phased approach to shuttle design and the use of existing liquid or solid propellent boosters for interim capability. Contracts worth \$2.8 million each, except Lockheed's at \$1.4 million. Contract period goes to Oct. 31. |
| | FY 1972 begins with shuttle appropriations at \$100 million. |
| Jul. | Rocketdyne selected to develop the shuttle main engine. Estimated contract value of \$500 million. The award is protested by Pratt & Whitney. |

| | |
|---|---|
| Aug. 15 | End of two-day conference at Wood's Hole, Mass. of NASA, DOD, and shuttle contractors with the Space Shuttle Panel of PSAC. Topics focused on alternative configurations and economics of the program. |
| Aug. | NASA decides to adopt an external LOX/LH$_2$ tank for the baseline orbiter with a MKI/MKII approach in development. |
| Sep. 1 | NAR, McDAC, Grumman/Boeing and Lockheed present their interim findings to NASA on mid-term results of the phase B extension. Boeing proposes adoption of the RS-IC, a reusable Saturn V first stage with added tail, wings and crew compartment. Liftoff weight of 6.5 million lbs. with a length of more than 200 ft. and a wing span of 121 ft. A Grumman orbiter, 147 ft. long with a 90 ft. wing span, would be attached as a piggy-back with external LH$_2$ tanks. Development costs of $7.9 million. Boeing also proposes an S-IC expendable booster with a forward 'shoe' supporting the external LH$_2$ tank orbiter, and a solid propellent booster concept with LOX/LH$_2$ for the orbiter carried in a pod beneath the fuselage. |
| Sep. 12 | NASA informs all phase B contractors to incorporate planning for alternate unmanned boosters. It also requests the contractors to study a ballistic recoverable booster using pressure-fed engines. The orbiter is to have the capabilities as defined at Williamsburg. |
| Oct. 7 | NASA announces a second phase B extension to NAR, McDAC, Grumman/Boeing and Lockheed, to run till Feb. 28, 1972. A possible two-month extension would take studies till April 30. This superseds the first extension. The baseline study will examine ballistic recoverable boosters, with either F-1 or pressure-fed engines in a series burn, or twin pressure-fed engines in a parallel burn mode. |
| Oct. 19 | Alexander Flax memo to Edward David, the President's Science Advisor, critical of current shuttle designs and their economic justification. |
| Oct. 27 | NASA presentation to the NASA/USAF STS Committee on current alternative configurations does not include TAOS. |
| Oct. 28 | Letter from Mathematica advocating the TAOS design as economically preferred. Orbiter uses an |

external LOX/$LH_2$ tank with solid or liquid booster assists.

Oct. NASA displays interest in liquid or solid propellent boosters for the shuttle and also considers reducing the cargo bay size and payload lift capability.

Nov. MKI/MKII approach dropped by NASA as not cost-effective.

Dec. 29 Letter from James Fletcher to Caspar Weinberger at OMB summarizing NASA's support for the full-size orbiter in the TAOS configuration. A 14x45 ft. payload bay and 45,000 lb. capacity to a due east orbit would be a less desirable second option.

Dec. Final reports from the second phase B extension submitted.

1972

Jan. 3 NASA is informed of the President's approval for the shuttle program at a White House meeting.

Jan. 5 President Nixon announces his decision to proceed with shuttle development. The decision also endorsed the full capability orbiter and TAOS configuration NASA had recommended. The question of liquid or solid boosters was still undecided.

Jan. 13 MSFC issues 2 month contract to Aerojet General, Lockheed, Thiokol and United Technology for analysis of potential application of 120 in. and 156 in. solid propellent boosters to the shuttle. Each contract valued at $150,000.

Jan. 31 Mathematica presents its final report to NASA on results of its second major study for the agency. Teh report shows the series or parallel burn pressure-fed or solid propellent parallel burn booster to be equally competitive economically.

Jan. Aerospace Corp. presents their final report on Integrated Operations/Payloads/Fleet Analysis conducted for NASA to establish a reliable shuttle traffic model.

Feb. 4 MSC awards an interim contract extension to Rocketdyne ($1 million) for the shuttle main engine pending the General Accounting Office's decision on the Pratt & Whitney protest of the source selection.

| | |
|---|---|
| Feb. 17 | AFL-CIO statement supports the Nixon decision to proceed with the shuttle. |
| Feb. 22 | NASA OMSF design review examines the alternative configurations analyzed so far in the second phase B extension. These include pressure-fed, F-1 high pressure, and 120 or 156 in. diameter solid propellent boosters in a series burn configuration and twin 156 in. solids, twin pressure-fed liquids, or clustered 120 in. solid boosters in parallel burn with the orbiter's main engines. |
| Mar. 15 | NASA adopts the parallel burn recoverable solid propellent booster concept for the shuttle. |
| Mar. 17 | NASA issues RFPs for the development of a shuttle and fabrication of two orbiters. Designs due by May 12. |
| Apr. 1 | Donald Rice leaves the OMB for the Rand Corp. |
| Apr. 4 | NASA awards a 90-day letter contract to Rocketdyne at $9.8 million for development and production of the shuttle main engine. |
| Apr. 14 | NASA announces selection of KSC and Vandenburg AFB as prime launch sites for the shuttle. KSC to assume development and flight testing responsibility with Vandenburg being phased in for the early 1980's. |
| Apr. 20 | Anti-shuttle (TAOS) amendment defeated in the House 103-111. |
| May 11 | Federation of American Scientists issue a report critical of the shuttle's justification. |
| | Anti-shuttle amendment defeated in the Senate 61-21. |
| May 12 | Four companies, NAR, McDAC, Grumman and Lockheed, present their shuttle development and deisgn proposals to the Contracting Officer, Space Shuttle Procurement Branch at MSC. |
| Jun. 2 | GAO report on "Cost-Benefit Analysis Used in Support of the Space Shuttle Program". |
| Jul. 1 | FY 1973 begins with shuttle appropriations of $227.5 million. |

| | |
|---|---|
| Jul. 10 | Sen. Mondale requests another GAO analysis of the cost-effectiveness of the shuttle to be due March 1973. |
| Jul. 25 | NASA announces the selection of NAR to begin development of the shuttle on a cost plus fixed fee and award fees contract valued at $2.6 billion over the next six years. Runners-up were Grumman, McDAC and Lockheed. |
| Jul. 27 | William Proximire takes over the chairmanship of the House Appropriations Committee with NASA oversight. |
| Aug. 7 | Grumman, McDAC and Lockheed are debriefed by NASA as to the reasons for the failure in the final source selection. |
| Aug. 9 | NASA issues contract number NAS9-14000 to NAR Space Division for shuttle work. |
| Aug. 10 | NAR announces plans to issue subcontract RFPs with 90 days. |
| Aug. | Definitive contract between NASA and Rocketdyne on the shuttle main engine signed. |
| Oct. 31 | NASA announces that all subcontracting on the shuttle will be restricted to U.S. companies. |
| Oct. | NAR establishes a development baseline for the shuttle. |
| Nov. 13 | NASA holds a program requirements review with MSC and NAR teams. |
| 1973 | |
| Jan. | NASA approves NAR's 'lightweight' shuttle design. |

# Appendix

## List of Acronyms

AACB- Aeronautics & Astronautics Coordinating Board
ABES- Air breathing engine systems
AEC - Atomic Energy Commision
AFFTC- Air Force Flight Test Center
AFL-CIO- American Federation of Labor, Council of Industrial Organizations
AIAA- American Institute of Aeronautics and Astronautics
ATP- Authority to Proceed
BOB- Bureau of the Budget
CIA- Central Intelligence Agency
DCS- Deputy Chief of Staff (Department of the Air Force)
DDRE-Defense Development of Research & Engineering
DDT&E- Design Development Research & Engineering
DOD- Department of Defense
ELV- Expendable launch vehicle
EOS- Earth Orbit Shuttle
ET- external tank
fps- feet per second
FRC- Flight Research Center
FY- fiscal year
GAC- go-around capability
GAC- Grumman Aerospace Corp.
GAO- General Accounting Office
GD- General Dynamics
GEO- geosynchronous orbit
GLOW- gross lift-off weight
HO- hydrogen/oxygen tank
HQ- headquarters
IDA- Institute of Defense Analysis
IFR- instrument flight rules
ILRV- Integral Launch and Reentry Vehicle
ILS- instrumented landing system
KSC- Kennedy Space Center
LEO- low earth orbit
L/D- lift over drag
LH2- liquid hydrogen
LMSC- Lockheed Missiles and Space Co.
LOA- list of acronyms
LOW- lift-off weight
LOX- liquid oxygen
LPFB- liquid propellant pressure-fed booster
Max q- time of maximum aerodynamic pressure on a vehicle
McDAC or MDC- McDonnell Douglas Corp.
MKI/MKII- mark I/mark II versions of the orbiter
MSC- Manned Spacecraft Center, Houston
MSFC- Marshall Spaceflight Center, Huntsville
MOL- Manned Orbital Laboratory

NAR or NR- North American Rockwell
NAS- National Academy of Sciences
NASA- National Aeronautics and Space Administration
NASC- National Air and Space Council
NERVA- nuclear rocket engine program
nm- nautical miles
NRO- National Reconnaissance Office
NTOP- New Technological Opportunities Program
PRR- Program Readiness Review
PSAC- President's Science Advisory Committee
OART- Office of Advanced Research and Technology (NASA)
OMB- Office of Management and Budget
OMS- Orbital Maneuvering System
OOS- Orbit-Orbit Shuttle (space tug)
OSSA- Office of Space Science and Applications (NASA)
OSD- Office of the Secretary of Defense
OST- Office of Science and Technology (White House)
PFB- Pressure-fed booster
RATO- rocket assisted take-off
RCS- Reaction Control System
R&D- research and development
RDTE- research development testing and evaluation
RFP- Request for Proposal
SAMSO- Space and Missile Systems Organization (now Space Div.)
SEB- Source Evaluation Board
S-IVB- third stage of the Saturn V rocket
S-IC- first stage of the Saturn V rocket
SPFB- series burn pressure-fed booster
SRB- solid rocket booster
SRM- solid rocket motor
SSB- Space Science Board (NAS)
SSME- space shuttle main engine
SSRM- series burn solid rocket motor
SSTG- Space Shuttle Task Group (NASA)
STG- Space Task Group
STS- Space Transportation System
TAHO- thrust-assisted, hydrogen/oxygen external tank orbiter
TAOS- thrust-assisted orbiter shuttle
TPFB- Twin burn pressure-fed booster
TPS- thermal protection system
TSRM- Twin burn solid rocket motor
USAF- United States Air Force
VAFB- Vandenberg Air Force Base
VFR- visual flight rules

# Bibliography

American Institute of Aeronautics and Astronautics, "The Post-Apollo Space Program: An AIAA View," Astronautics & Aeronautics, July 1969, p. 39.

Allen, Joseph P., Letter to Senator William Proxmire from the Director of Legislative Affairs-NASA, 26 January 1978.

Aspin, Les, "The Space Shuttle: Who Needs it?", The Washington Monthly, September 1972, p. 18.

Atkinson, A. H., Letter to B. Hello-Space Shuttle Program Manager, North American Rockwell, 25 October 1972.

"The Shuttle Decision", Aviation Week & Space Technology, 31 July 1972, p. 7.

"Alternate Booster Evaluation Set", Aviation Week & Space Technology, 24 January 1972, p. 37.

"Shuttle RFP Stresses Innovation", Aviation Week & Space Technology, 27 March 1972, p. 18.

Baker, David, "Evolution of the Space Shuttle", Spaceflight, June, July, August, September 1973.

Barfield, Claude E., "NASA Stakes Funds, Future on Reusable Space Vehicle", National Journal, 13 March 1971.

Barfield, Claude E., "Technology Report", National Journal, 12 August 1972 and 19 August 1972.

Barfield, Claude E., "White House Views Intense Technology Hust as Useful Exercise, though Few Priorities Emerge", National Journal, 6 May 1972.

Battelle Laboratories, "Space Transportation System Operations Technology Study", mid-term briefing, 5 March 1981.

Berglund, Rene, Letter to Ray Leeth-Space Station Task Group, North American Rockwell, 13 October 1970.

Cohen, Aaron, Letter to B. Hello-Space Shuttle Program Manager, North American Rockwell, 5 December 1972.

"Manned Space Projects Recede as Priorities Shift", Congresstional Quarterly, 13 February 1970, p. 399.

"Space Shuttle: NASA vs. Domestic Priorities", Congressional Quarterly, 26 February 1972, p. 435.

"Space Program Text-Nixon for 7 March 70", Congressional Quarterly, 13 March 1970, p. 768.

"Space Shuttle Will Usher in New Spaceflight Era", Congressional Quarterly, 28 April 1979.

Cooper, Henry S. F., "A Reporter At Large", The New Yorker, 9 February 1981 and 16 August 1981.

Day, L. E., Letter to R. F. Thompson-Space Shuttle Program Manager, Manned Spacecraft Center, 28 September 1970.

Donlan, Charles J., Briefing to the USAF/NASA STS Committee, 27 October 1971.

Donlan, Charles J., Letter to Col. Ralph J. Ford, 28 April 1972.

Donlan, Charles J., "Space Shuttle Systems Definition Evolution", internal memorandum-Manned Spacecraft Center, 11 July 1972.

Dooling, David, "Space Shuttle: Crises and Decision", Spaceflight, July 1972, p. 242.

Draper, A.; Buck, M.; Goesch W.; "A Delta Shuttle Orbiter", Astronautics & Aeronautics, January 1971, p. 26.

Drew, Russell, The U.S. Posture in Space- A Retrospective Assessment, umpublished manuscript prepared for the Office of Technology Assessment, March 1981.

Faget, Maxime A.; Silveira, Milton A.; "Fundamental Design Considerations for an Earth Surface-to-Orbit Shuttle", Astronautical Research 1970, Proceedings of the XXIst Congress of the IAF, 5 October 1970, p. 380.

Faget, Maxime A., "Space Shuttle: A New Configuration", Astronautics & Aeronautics, January 1970, p. 52.

Faget, Max, Memo to the Deputy Director, Manned Spacecraft Center, 30 November 1970.

Federation of American Scientists, "Critique of the Shuttle", unpublished manuscript, 11 May 1972.

Fletcher, James; Low, George; McCurdy, Frank; "Selection of Contractor for the Space Shuttle Program", unpublished manuscript, 18 September 1972.

Fletcher, James, Memo to George Low, 26 May 1971.

Fletcher, James, Memo to George Low, 30 September 1971.

Fletcher, James, Memo to George Low, 20 October 1971.

Fletcher, James, Letter to Jonathan Rose, White House Staff, 22 November 1971.

Fletcher, James, Letter to George Shultz, Office of Management and Budget, 30 September 1971.

Fletcher, James, Letter to Caspar Weinberger, Office Of Management and Budget, 19 October 1971.

Fletcher, James, Letter to Caspar Weinberger, Office of Management and Budget, 29 December 1971.

Fletcher, James, Letter to Caspar Weinberger, Office of Management and Budget, 3 January 1972.

Fletcher, James, Letter to Caspar Weinberger, Office of Management and Budget, 4 January 1972.

Galloway, Alec, "Will the Shuttle Need Military Backing?", *InterAvia*, December 1972, p. 1327.

General Accounting Office, *Analysis of Cost Estimates for the Space Shuttle and Two Alternate Programs*, B-173677, 1973.

General Accounting Office, *Cost-Benefit Analysis Used in Support of the Space Shuttle Program*, B-173677, 2 June 1972.

Gentry, Jerauld R., "A Lifting Body Pilot Looks at Space Shuttle Requirements", Society of Experimental Test Pilots 1970, *Report of the XIV Symposium Proceedings*, 24-26 September 1970, p. 179.

Geraet, Gary F., *The Shuttle Decision and the Federal Science Establishment*, Master's thesis in the Department of Political Science, George Washington University, 1975.

Godfrey, Roy, Memo to R. F. Thompson-Space Shuttle Program Manager, Manned Spacecraft Center, 12 March 1971.

Grey, Jerry, *Enterprise*, (New York: William Morrow and Co., Inc. 1979).

Greenwood, Ted, "Reconnaissance and Arms Control", *Scientific American*, February 1973.

Grumman Aerospace Corp., Shuttle Systems Evolution and Selection, Briefing to NASA, 15 December 1971.

Grumman Aerospace Corp., Alternate Space Shuttle Concepts, mid-term report, 31 December 1970.

Hallion, Richard P., The Antecedents of the Space Shuttle, unpublished manuscript, 25 October 1979.

Harris, C. D.; Epps, R. C., "Go-around vs. Jet Powered Landing vs. Unpowered Landing Requirements Analysis", internal memo-Operational Test Branch, Landing and Recovery Division, Manned Spacecraft Center, 3 October 1969.

Hirschhorn, Joel S.; Giammarise, Anthony, "Titanium vs. Aluminum for the Space Shuttle", SAMPE Journal, January/February 1980.

Hunter, Maxwell W., The Origins of Shuttle (according to Hunter), unpublished manuscript, September 1972.

Hunter, Maxwell W.; Miller, Wayne; Gray, Robert, "The Space Shuttle Will Cut Payload Costs", Astronautics & Aeronautics, June 1972, p. 50.

Hutton, Richard, The Cosmic Chase, (New York: New American Library, Inc., 1981).

Jeffs, George W., "The Space Shuttle: Its Interdisciplinary Design and Construction", Interdisciplinary Science Reviews, Vol. 4, No. 3, September 1979.

Karth, Joseph E., "A Balanced Space Program- Mission Impossible?", speech before the National Space Club, National Press Club, Washington, D.C., 12 November 1969.

Layton, J. Preston, "Our Next Steps in Space", Astronautics & Aeronautics, May 1972.

Levine, Arthur L, The Future of the U.S. Space Program, (New York: Praeger Publishers, 1975).

Lindbloom, Charles E., The Policy-Making Process, (New York: Prentice-Hall, Inc. 1980).

Loechel, L., "High Temperature Metals for Space Shuttle", Space Shuttle Materials, Society of Aerospace Material and Process Engineers, Azuza, Calif., 1971.

Logsdon, John M., The Decision to Go to the Moon, (Chicago: University of Chicago Press, 1970).

Logsdon, John M., The Evolution of the U.S. Civilian Space Program: Policy and Institutional Issues, unpublished manuscript prepared for the Office of Technology Assessment, December 1980.

Logsdon, John M., "Shall We Build the Space Shuttle?", Technology Review, October/November 1971, p. 49.

Logsdon, John M., "The Space Shuttle Decision: A Policy History", A research proposal to the NASA Office of University Affairs, April o975.

Logsdon, John M., "The Space Shuttle Decision: Technology and Political Choice", Journal of Contemporary Business, Fall 1978.

Low, George, Memo to J. D. Hodge, Manned Spacecraft Center, 5 August 1969.

Low, George, Memo to Dale Myers, Manned Spacecraft Center, 27 January 1970.

Low, George, Memo to James Fletcher, NASA Headquarters, 18 August 1971.

Low, George, Letter to Don Rice, Office of Management and Budget, 18 November 1971.

Low, George, Memorandum for the Record, Meeting with the President on 5 January 1972, 12 January 1972.

Lynch, Robert A., "The Space Shuttle Booster", 8th Space Congress, Technology Today and Tomorrow, Cocoa Beach, Florida, 19-23 April 1971.

Malkin, M. S., "Space Shuttle/The New Baseline", Astronautics & Aeronautics, January 1974, p. 62.

Mark, Hans, Letter to Max Faget, Manned Spacecraft Center, 22 June 1971.

Mark, Hans, Letter to James Van Allen, University of Iowa, 12 July 1971.

Martin-Marietta Co., Study of Tital IIIL Booster for Space Shuttle Application, Final Report of Phase B extension, October 1971.

Mathematica Inc., Factors for a Decision on a New Reusable Space Transportation System, report to James Fletcher, NASA Headquarters, 28 October 1971.

Mathematica Inc., *Economic Analysis of the Space Shuttle System*, NASA-CR-129570, 31 January 1972.

Mathematica Inc., *Economic Analysis of New Space Transportation Systems*, NASW-2081, 31 May 1971.

Mondale, Walter F., Letter to the U.S. Senate Committee on Aeronautical and Space Sciences, 25 April 1972.

McGorlick, Joseph E., Memo to Director Launch Vehicle and Propulsion Programs, NASA Headquarters, 2 December 1969.

Mueller, George, Briefing to potential Space Shuttle Contractors, NASA Headquarters, 5 May 1969.

National Academy of Sciences-National Research Council, Space Science Board, Planetary Exploration 1968-75, (Washington, D.C.: NRC, 1968).

NASA, Agreement between the NASA and the Department of the Air Force Concerning the STS, with Attachment A, NMI 1052,130, 17 February 1970, amended 9 August 1972 and 20 May 1974.

NASA, *America's Next Decade in Space*, Report to the Space Task Group, September 1969.

NASA, *Flight Test Results Pertaining to the Space Shuttlecraft*, NASA TM X-2101, Symposium at the Flight Research Center, 30 June 1970.

NASA, *A Program of Space Exploration in the 1970's and 1980's*, preliminary report presented to the Space Task Group, 4 August 1969.

NASA, *Source Evaluation Board Manual*, NHB 5103.6A, December 1975.

NASA, *Space Shuttle Summary Report*, prepared by the NASA Space Shuttle Task Group, 3 volumes, 19 May 1969.

NASA, *Summary Report of Recoverable vs. Expendable Boosters*, prepared by the NASA Space Shuttle Task Group, 10 December 1969.

NASA-MSC, Memo for internal distribution from the Manned Spacecraft Center Mission Analysis Branch, 7 December 1972.

NASA-MSC, *Space Shuttle Program Request for Proposal*, No. 9-BC421-67-2-40P, 1972.

NASA-MSC, Space Shuttle Program Study Change Request (SCR) 2011, 17 August 1970.

NASA-MSC, Space Shuttle Program Study Change Request (SCR) 2012, 18 August 1970.

NASA-MSC, *Summary of MSC Shuttle Configurations (External HO Tanks)*, 30 June 1972.

NASA-MSFC, Study Control Document-Study of Alternate Space Shuttle Concepts, NAS9-11160, May 1971.

Nature, "NASA in trouble with Congress, Executive, Scientists", 11 June 1971.

Newell, Homer, Memo to James Fletcher, NASA Headquarters, 3 December 1971.

New Scientist, "The Shuttle Walks a Tightrope", 9 August 1973.

New York Times, editorial, 18 July 1969.

New York Times, p. 1, 16 September 1969.

North American Rockwell-Space Division, *Space Shuttle-Its Meaning to the Nation & California*, LE 71-3(R), 1971.

North American Rockwell, *Orbital Requirements for Air-Breathing Engines (ABE)*, internal briefing, May 1970.

North American Rockwell, *Space Shuttle Program Technical Proposal*, Vol. III, SD 72-SH-50-3, 12 May 1972.

Paine, Thomas, Memorandum to the President, 26 February 1969.

Peebles, Curtis, "The Origin of the U.S. Space Shuttle", *Spaceflight*, 11 November 1979 and 12 December 1979.

PSAC/OST, *The Next Decade in Space*, report of the Space Science and Technology Panel to the President, March 1970.

PSAC, *The Space Program in the Post-Apollo Period*, (Washington, D.C.: Government Printing Office, February 1967).

Rainey, Robert W., "Progress in Technology for Space Shuttle", Advances in the Astronautical Sciences Vol. 28 *Space Shuttle and Interplanetary Missions*, American Astronautical Society, 1970.

RAND Corp., *The Space Shuttle as an Element in the National Space Program*, RM-6244-1-PR, October 1970.

Roland, Alex, A Guide to Research in NASA History, 5th ed., NASA HHR-50, July 1980.

Sapolsky, Harvey, The Polaris System Development: Bureaucratic and Programatic Success in Government, (Cambridge: Harvard Press, 1972).

"Space Shuttle: A Giant Step for NASA and the Military?", Science, 12 March 1971.

Scott, Harry A., "Space Shuttle-A Case Study in Design", Astronautics & Aeronautics, June 1979, p. 54.

Slayton, Donald K., Memo to the Manager, Space Shuttle Program, Manned Spacecraft Center, 26 August 1970.

Smith, E. P., "Space Shuttle in Perspective-History in the Making", AIAA 75-336, AIAA 11th Annual Meeting and Technical Display, Washington, D.C., 24-26 February 1975.

"Air Force Disavows RAND Shuttle Report", Space Business Daily, 28 May 1971.

"Financial Setbacks in the U.S. Space Programme", Spaceflight, August 1973.

Steelman, Lt. Col. Donald L., "The Air Force and the Space Transportation System", Air University Review, January/ February 1971.

Stewart, J.; Glassman, M.; Nosek, J., "Shuttle Air Breathing Propulsion", AIAA/SAE 7th Propulsion Joint Specialist Conference, AIAA 71-662, 14-18 June 1971.

Report of the Task Force on Space, Presidential Transition Team, unpublished, 8 January 1969.

Tischler, A. O., "A Commentary on Low-Cost Space Transportation", Astronautics & Aeronautics, August 1969.

Tischler, A. O., Letter to Dale Myers, NASA Headquarters, 2 January 1973.

Truax, Robert, "Shuttles-What Price Elegance?", Astronautics & Aeronautics, June 1970.

Ulsamer, Edgar, "Almost All Conditions are 'Go' for the Space Shuttle", Air Force, March 1972.

Ulsamer, Edgar, "How Vulnerable are USAF Military Space Systems?", Air Force, June 1972.

USAF/STS Committee, Minutes for meetins of 28 May 1970, 29 June 1970, 18 August 1970, 2 October 1970, 28 October 1970, 27 October 1971.

U.S. Congress, Senate, Committee on Appropriations, Hearings before the Subcommittee on the Department of HUD and other independant agencies, 93rd Congress, 1st Session 1973, p. 1015-33.

U.S. Congress, Senate, *Congressional Record*, for 29 July 1969, p. 58739; 28 June 1971, p. 510085-95; 11 May 1972, p. 57752.

U.S. Congress, House, *Congressional Record*, for 13 August 1969, p. H7361; 23 April 1970, p. 12869-73; 20 April 1972, p. H3388.

U.S. Congress, House, *Space Shuttle-Skylab, Manned Space Flight in the 1970's*, committee print of the Committee on Science and Astronautics, 92nd Congress, 2nd Session, January 1972.

U.S. Congress, House, *United States Civilian Space Programs 1958-1978*, committee print of the Committee on Science and Technology, 97th Congress, 2nd Session, January 1981.

"Space Shuttle, for $5.5 Billion, Get Green Light", Wall Street Journal, 6 January 1972.

Young, K. A., "Representative Space Shuttle Missions and their Impact on Shuttle Design", AIAA 73-608, 1973.