MANUFACTURE AND EVALUATION OF A FIVE-KILOWATT AXIAL-FLOW WATER TURBINE

by

LEE WING HO

S.B.M.E., Massachusetts Institute of Technology
(1976)

SUBMITTED IN PARTIAL FULFILLMENT
OF THE REQUIREMENTS FOR THE
DEGREE OF

MASTER OF SCIENCE IN MECHANICAL ENGINEERING

at the

MASSACHUSETTS INSTITUTE OF TECHNOLOGY

(June 1979)

Signature of Author ....
Department of Mechanical Engineering

Certified by ....
Thesis Supervisor

Accepted by ....
Chairman, Department Committee

MANUFACTURE AND EVALUATION OF A FIVE-KILOWATT AXIAL-FLOW WATER TURBINE

by

LEE WING HO

Submitted to the Department of Mechanical Engineering on May 10, 1979 in partial fulfillment of the requirements for the degree of Master of Science in Mechanical Engineering.

ABSTRACT

An axial-flow reaction-type water turbine designed for farms and small communities was manufactured. Fiberglass-reinforced plastic was used extensively as the manufacturing material and several design modifications were introduced. The turbine was subsequently tested below designed conditions due to limitation of the testing circuit. Evaluation of the performance,the design, the choice of manufacturing materials and the production techniques were conducted. Owing to the presence of solid particles in the flow in the testing circuit, a substantial drop in the efficiency was resulted. Wearing of the bearing materials was found to be quite severe. Fiberglass-reinforced plastic was found to be a good choice of manufacturing material in most cases. The production techniques and procedures involved were simple and effective but lengthy. It could be concluded that a redesigned thrust bearing would be necessary to achieve an acceptable level of effciencies. Recommendations on additional modifications were suggested with the goal of improving both the performance and reliabilty of the turbine. The cost of materials was estimated to be around $300. Suggestions for further testing were also presented.

Thesis supervisor: David Gordon Wilson
Title: Professor of Mechanical Engineering

ACKNOWLEDGEMENTS

I am grateful to Professor David Gordon Wilson who gave practical advice throughout the project, helped making some of the components and supplied the project with materials.

To Professor Harlemann of the Hydrodynamics Laboratory of M.I.T., I am thankful for the permission to use the testing facilities there. To Mr. McCaffrey, I would like to thank him for his assistance in the testing set up.

I would like to thank Paul Stipe for his help and patience in making mold after mold, and to Jim Hubbard for his work on the testing assembly. To the enthusiatic 2.86 students Jim Fenton, Dick Henze, Mark Desimore, Lee Gavens, Bob Gnuel and Stacy Loesch, I thank them for performing an excellent job on the machining of some of the metal components.

I am grateful to Pat Baron and Joseph Chan who helped in the taking and printing most of the pictures. Lastly, to all my friends who kept asking the question " How's your thesis", I am thankful for their concern and reminder.

The project was funded in part by the Technology Adaption Program and I would like to give thanks for the support.

TABLE OF CONTENT

CHAPTER 1: INTRODUCTION

CHAPTER 2: DESIGN AND MODIFICATIONS

CHAPTER 3: MANUFACTURING

CHAPTER 4: TESTING

CHAPTER 1

INTRODUCTION

1.1 Background

The turbine under study is designed as a mean to provide inexpensive energy for farms and small communities. Power transmission to these communities from the main power plants can be very costly if their location is far from existing distribution lines. Diesel or gasoline-engine-driven generators are frequently used; however, their operating cost rises steadily due to the increase in the cost of fuels and the potential fuel shortage. For communities located near streams with substantial head and flow, hydroelectric power appears to be the best alternative provided a low-cost and reliable machine is available.

Different types of water turbines which suit the above needs were designed and studied by Durali [1]. In comparing the various designs, the following factors were considered.

(i) Performance.
(ii) Manufacture and maintenance effort.
(iii) Cost.

With the assumption that the turbine is to be manufactured on a large scale, Durali concluded that the axial-flow reaction-type turbine was the best design among those considered.

1.2 Study objectives

The present study can be divided into two parts: manufacture and evaluation.

Simplicity is one of the main objectives in designing the turbine. This enables the employment of simple techniques and facilities in its manufacturing. However, a balance is imposed between simplifying the manufacturing techniques and obtaining acceptable products.

The turbine was manufactured and tested. After the performance and characteristics had been found, evaluations were made on the following categories.

(i) Performance.
(ii) Design.
(iii) Manufacturing materials.
(iv) Production techniques.

Although the techniques used in large-scale production would differ considerably from those given here, the evaluation of the methods and approaches could provide insights to some of the difficulties encountered in making and assembling the machine. Improvement in the choice of materials could also be drawn from the investigations, and further modification of the design could be introduced.

Some ideas about the cost-effectiveness of the turbine could be obtained from the estimation of the cost of materials which is also given in this study. However, the estimation of the amount of labor is deleted because it would be unrealistic compared with that in actual production.

CHAPTER 2

DESIGN AND MODIFICATION

2.1 The mechanical design

The turbine assembly is shown in FIG. 1. It is singled staged with the stator and the rotor having similiar blading. The upstream stator has fifteen blades, the rotor sixteen. The stator and diffuser hubs act as bearings for the rotor, and the thrust bearing force is transmitted to the main housing by the diffuser blading. Lubrication is provided by a small portion of the inflowing water passing through the nose and then the slots in the stator hub.

A coupling disk transmits the torque from the rotor to the output shaft. As the disk can slide axially and can accommodate misalignment inside the rotor hub, only torque is transmitted, i.e., there is no axial force nor bending moment transmitted to the shaft. The latter is supported by a flange bearing enclosed in a housing which is bolted onto the back of the drain chute. The flange bearing has a seal to prevent leakage.

2.2 Modifications

Several modifications in the design and changes in the manufacturing materials were made to improve the performance

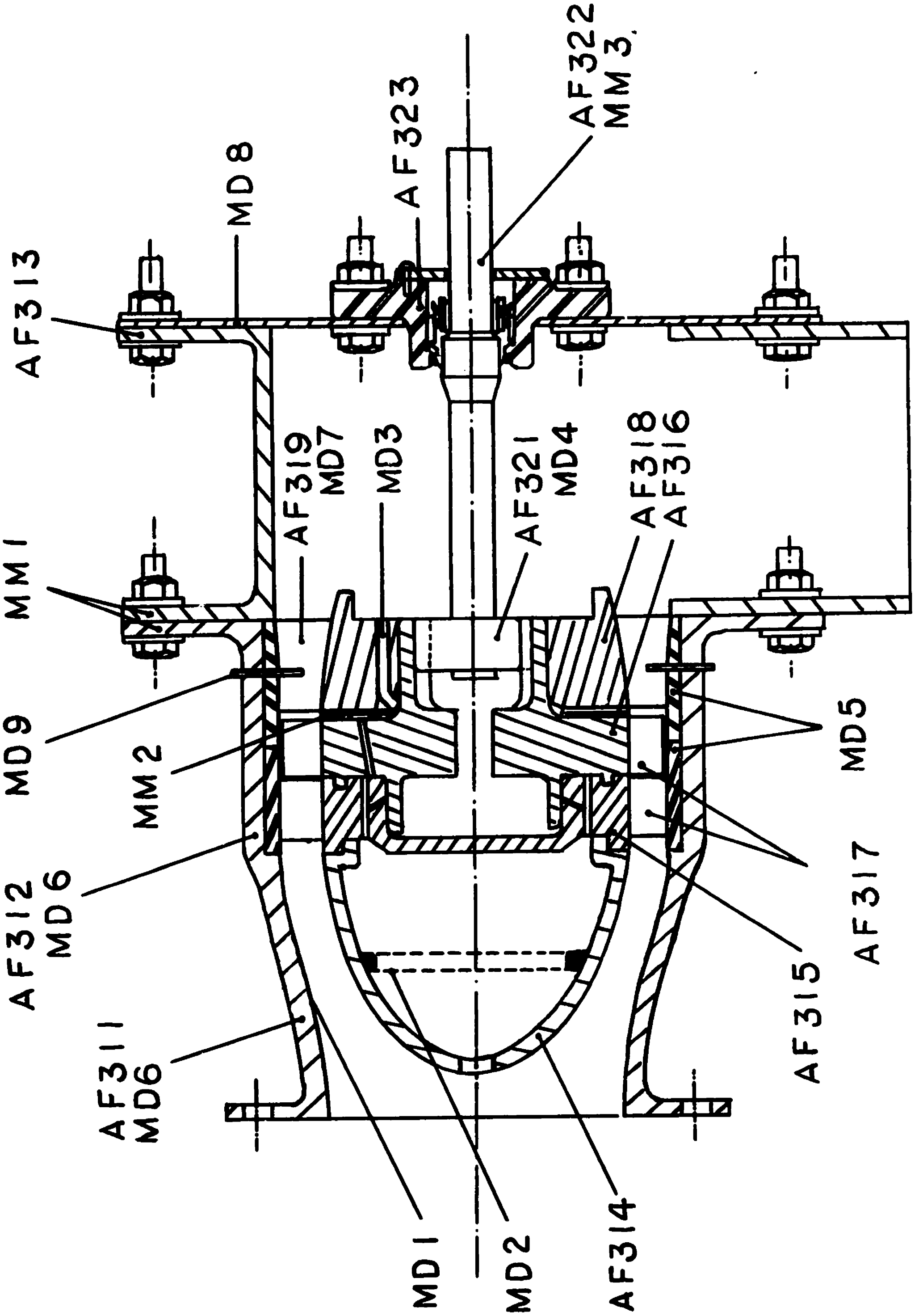

FIG.1 : Turbine assembly with modifications

TABLE 1: (A) TURBINE COMPONENTS, (B) MODIFICATIONS

NO.	DESCRIPTION OF COMPONENT
AF311	Main housing
AF312	Main housing
AF313	Drain chute
AF314	Nose
AF315	Stator
AF316	Rotor
AF317	Stator/rotor blades
AF318	Diffuser
AF319	Diffuser blades
AF321	Disk
AF322	Output shaft
AF323	Flange-bearing assembly

(A)

NO.	MODIFICATION
MM1	Glass-reinforced polyester resin (GRP) instead of steel
MM2	Teflon instead of stainless-steel
MM3	Aluminum (grade 2024) instead of stainless-steel
MD1	Inlet wall profile modified
MD2	Filter added
MD3	Slot added
MD4	Disk configuration modified
MD5	Blade mounts provided
MD6	Main housing units (parts AF311 and AF312) combined
MD7	15 blades instead of 8
MD8	Stainless-steel back plate added
MD9	Slots provided for locking pins

(B)

of the turbine and to reduce the manufacturing and assembling effort. They are given in TABLE 1 (B) and are described in the following sections.

2.2.1 Material changes

The main housing and the drain chute were made out of fiberglass-reinforced plastic instead of cast steel as specified in [1]in order to reduce the effort of production. Aluminum was used instead of stainless-steel in making the output shaft for the same reason. One of the two stainless-steel sheets which formed the contact surfaces of the thrust bearing was changed to Teflon inorder to reduce friction and wear of the bearing and improve the performance of the latter.

2.2.2 Design Modifications

The inlet wall profile was modified to give better acceleration to the inflow. The new configuration is given in FIG. 26. A filter made with several layers of fine wire was added inside the nose cone to prevent damage to the bearing from particles in the flow. A slot was added in the diffuser hub where thrust-relieving water pressure could be applied from an external source. This pressure would reduce the thrust on the bearing, reduce the wearing of the bearing material, and improve the turbine performance*.

Both the stator and the diffuser were provided with a ring-shaped blade-mount which could be fitted inside the main housing. Slots in the shape of the blade profiles were provided on these blade-mounts for the blades to fit in. An earlier proposed arrangement which specified fifteen blades on the diffuser was dropped; however, it left the diffuser with fifteen blades instead of eight as designed. The diffuser was fixed to the main housing by radial pins; it could be taken out of the housing together with the rotor. The stator was fixed permanently to the housing.

The configuration of the disk which transmitted torque from the rotor to the output shaft was modified as shown in FIG. 35. This modification was made to improve the strength of the rotor by eliminating the four highly-stressed teeth as specified in the old configuration.

A 3/16th inch thick stainless-steel plate was mounted at the rear end of the turbine to provide the flange-bearing assembly with adequate support. The plate was attached to the drain-chute by bolts.

---

* This was introduced as a mean to evaluate the thrust bearing effectiveness and should not be treated as a solution to the problem

CHAPTER 3

MANUFACTURING

3.1 The choice of materials

The major components of the turbine including the blades, the hubs, the blade-mounts and the housing units were made out of polyester with chopped-strand mat and boating/tooling cloth as reinforcement. The choice was made based on the advantages of fiberglass-reinforced plastic shown in the comparison as given in TABLE 2, and on the level of the production and funding of the project.

Except for the steel flange-bearing housing, all other components were made with either aluminum or stainless-steel because of their rust-resistant property. The former is easier to machine while the latter offers a higher strength.

3.2 The blades

Both the rotor blades and the diffuser blades were produced with similar techniques and procedures. The two major steps in their manufacturing were : the design and the making of the required molds; and the molding of the blades.

TABLE 2 : COMPARISON OF FIBERGLASS-REINFORCED PLASTIC VERSUS METAL AS MANUFACTURING MATERIAL

Fiberglass-reinforced plastic	Metal
1. Requires simplier manufacturing techniques (mainly plastic molding).	1. Requires more complicated techniques such as casting, welding, heat-treating, etc..
2. Requires only ordinary workshop facilities and equipment.	2. May require special facilities and equipment ,e.g., in thick metal cutting and bending.
3. Has a higher strength-to-weight compared with metal.	3. Has a comparatively lower strength-to-weight ratio.
4. Gives good surface finish easily.	4. May require special effort or machining to produce good surface finish.
5. Enables the production of components with fairly complicated configurations accurately with comparatively low effort.	5. Requires more effort to produce similiar components.

The blade-mold manufacturing set-up is illustrated in FIG. 2. Two pieces of wood with equal length and height were set up parallel to one another on a plate. They acted as guides for a slider which could translate freely on their top edges. Aluminum templates were cut and filed accurately to the specified blade profiles as given in [1]. The templates for both types of blades are shown in FIG. 3. A clearance angle of 30 deg. (shown in section A-A) was found to be adequate to give the molds a good surface finish. The templates were mounted in turn on the slider with two screws.

Gypsum with low setting expansion and adequate period of plasticity was used to make the molds. Both Hydrocal B11* and Ultracal 30*were tried,with the latter being found to be the better working material. The properties of both types of gypsum are given in Appendix A.

Gypsum mixed with the correct proportion of water was introduced into the assembly shown in FIG. 2. It was then cut into the desired shape by unidirectional cutting actions of the corresponding template while in the plastic stage. The mold was taken out of the assembly when set and was then ready for use. The blade-molds are shown in FIG. 4. Mold-release agent such as CEARA base wax was applied on the molding surfaces of the molds. They were then assembled with one of its ends sealed.

---

* U.S. Gypsum trade names

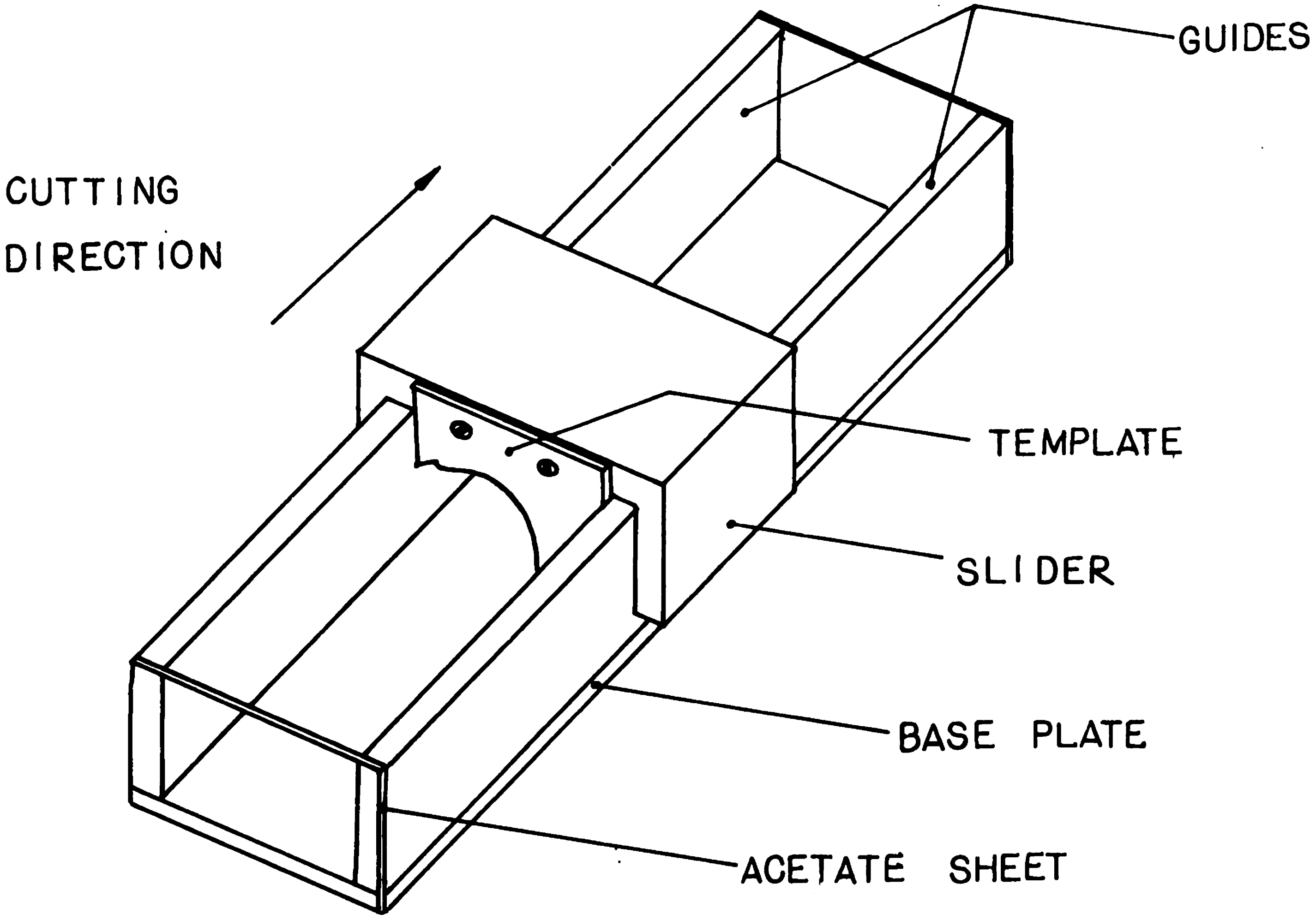

FIG. 2: Set-up for blade-mold manufacturing

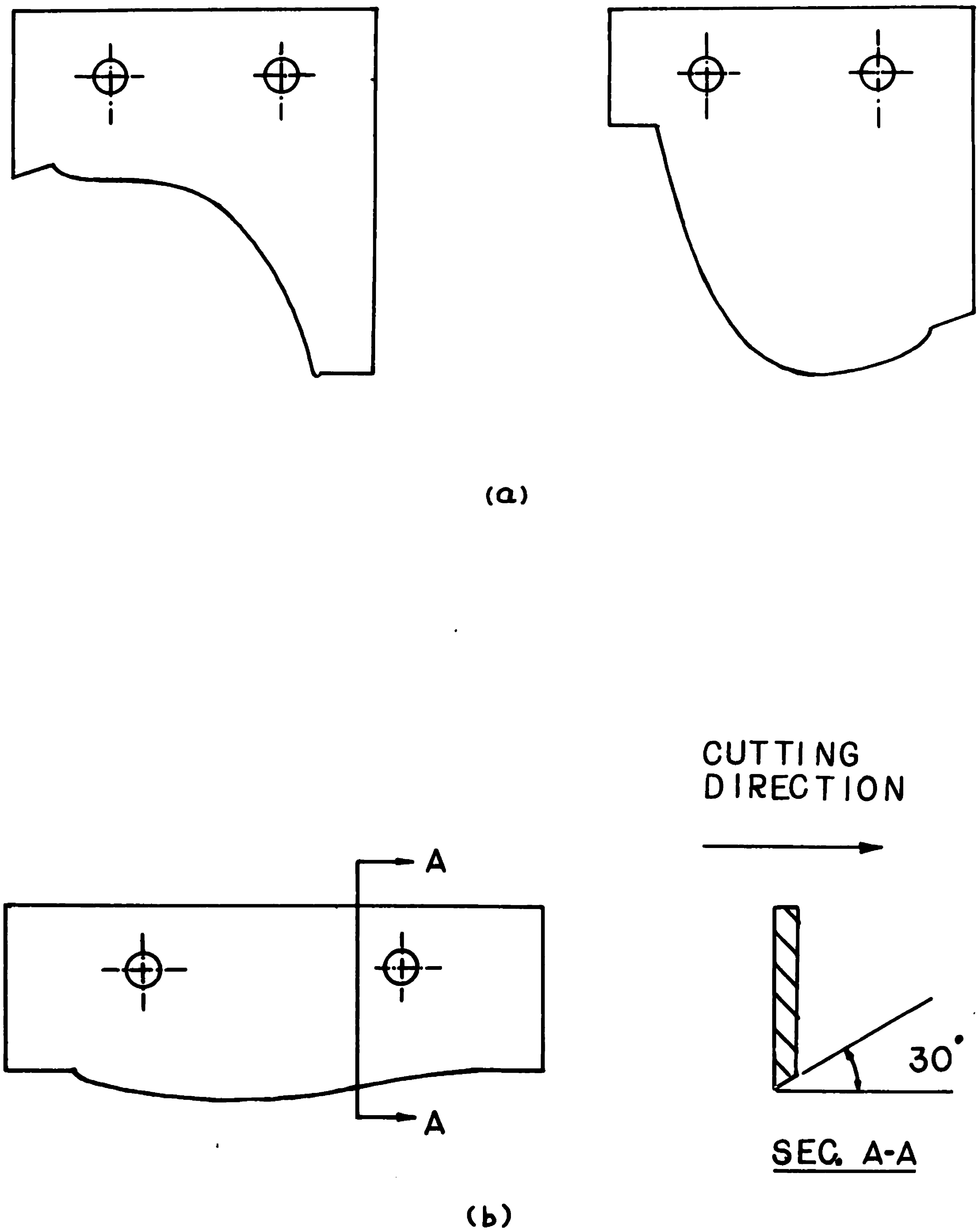

FIG. 3: Templates for (a) rotor-blade-mold (b) diffuser-blade-mold

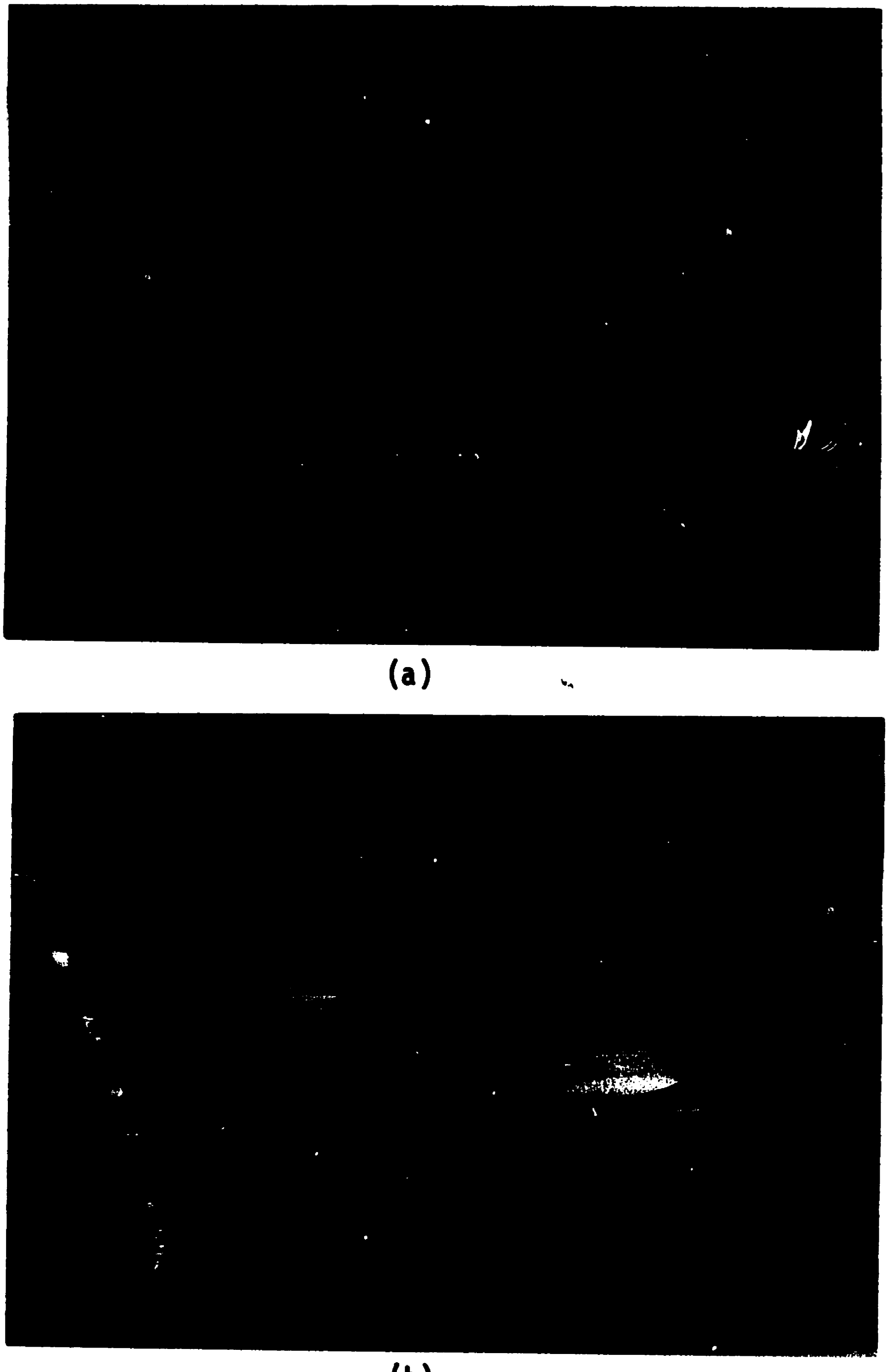

(a)

(b)

FIG. 4: (a) Completed rotor-blade molds with molded blade section
(b) Assembled diffuser-blade mold

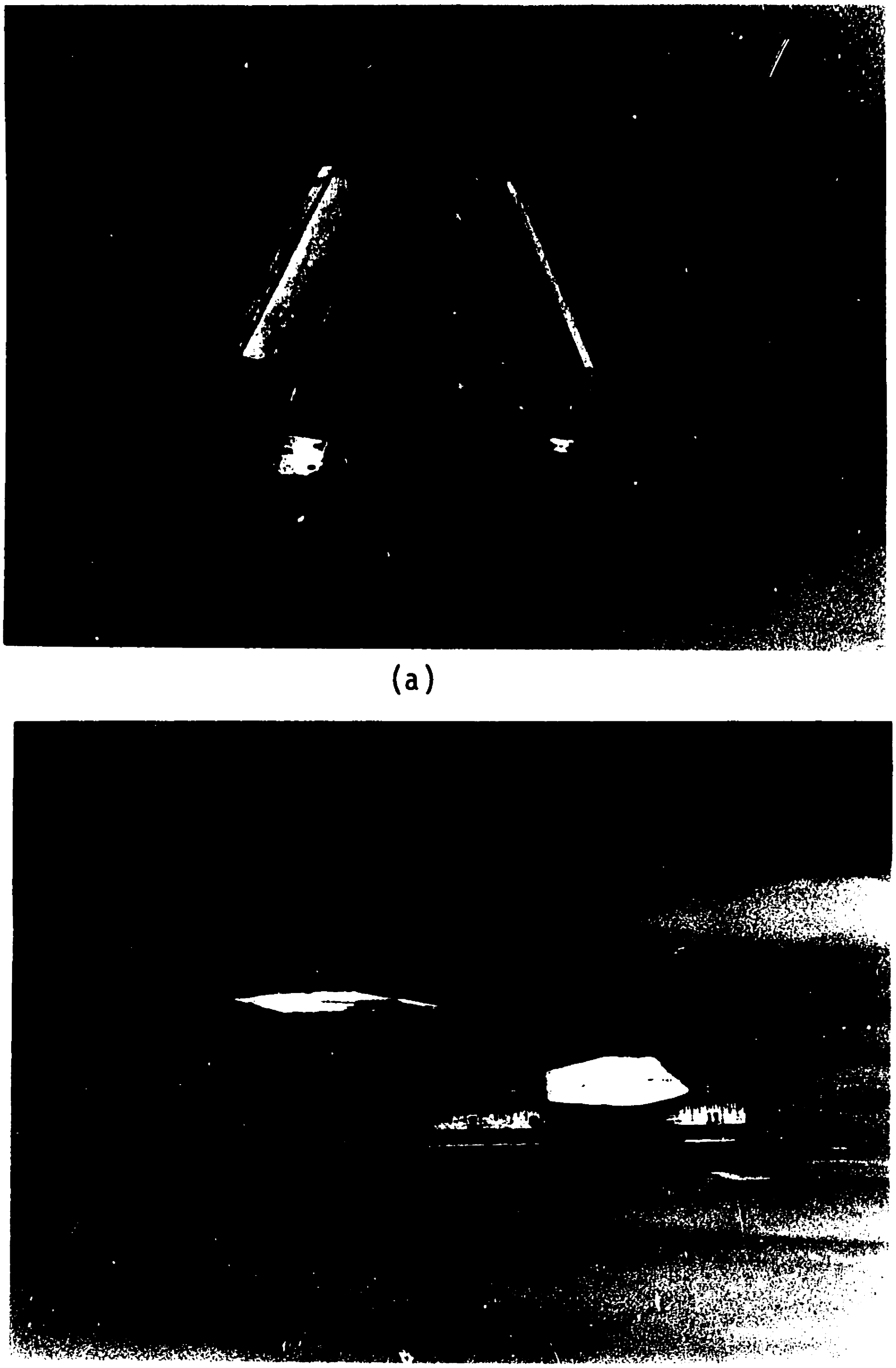

(a)

(b)

FIG. 4: (a) Completed rotor-blade molds with molded blade section
(b) Assembled diffuser-blade mold

The resin employed in the plastic molding of the blades was POLYLITE 33-031. Its properties and curing characteristics are listed in Appendix B. In carrying out the molding process, a small amount of resin with the correct proportion of MEK peroxide was introduced first to fill the corners and gaps. Resin-soaked chopped-strand-mat strips were introduced into the mold cavity until it was filled. Stirring was applied continuously during the process to release the trapped air. After setting, the molds were removed carefully. The finished blade-sections were then cut into the required lengths. A molded rotor-blade section is shown in FIG. 4.

3.3 The axisymmetric components

These are the blade-mounts, the rotor hub, the stator hub, the diffuser hub, and the nose. The required molds for the molding of these components were manufactured mainly with gypsum. In this case the cutting action was rotational, and was provided by templates mounted on a pivot. Subsequent molding procedures were similiar to those described in the last section. The maunfacture of all these components are described separately in the following sections.

3.3.1 The rotor hub

The following procedures were performed in the manufacture of the rotor hub:

(i) mold manufacturing and assembling;
(ii) plastic molding; and
(iii) machining.

The set-up used in the manufacture of the gypsum molds is shown in FIG. 5. The base was a piece of circular plywood about one-inch thick. Several wooden disks were stacked on top of the base as shown ; they were added to reduce the amount of gypsum required in the mold formation. An aluminum tube was erected at the center of the base: a 5/8 inch O.D. tube was chosen for convenience. This would later on act as the pivot for the clamp-template assembly. The clamp had a hole which fitted the pivot tube tightly (but turnable). It also had a slot in which a template could be fitted. The latter was locked in place by two screws. The templates needed are shown in FIG. 6 ; they correspond to the image of the profiles of the top and bottom molds in the molding set-up. The two templates were laid out, cut, and filed accurately ; a clearance angle of 30 degrees was provided to obtain good surface fininsh (section B-B). Inorder to meet the specified bearing tolerances, the radii of the bearings and hence the

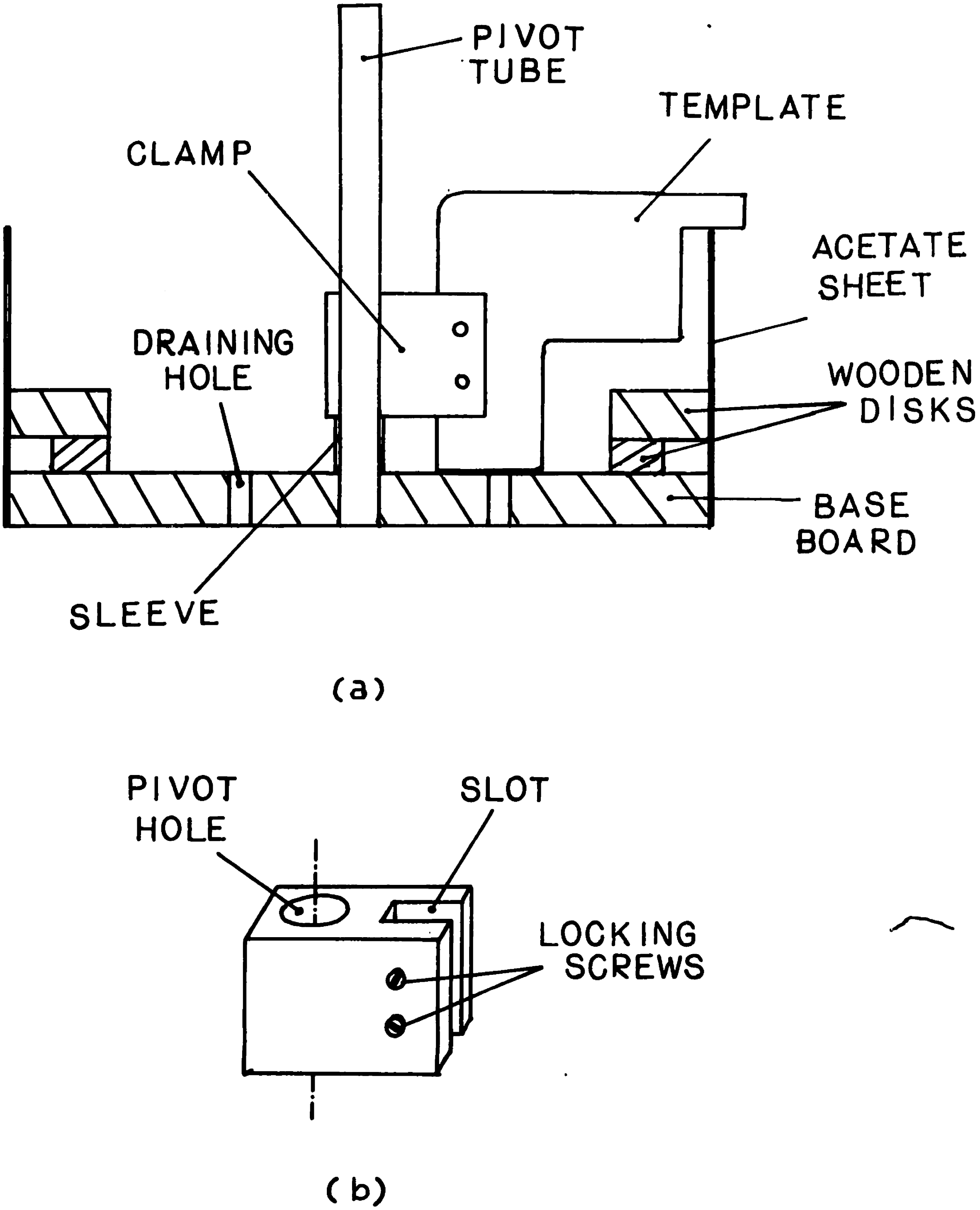

FIG. 5: (a) Set-up for axisymmetric mold manufacturing
(b) Clamp

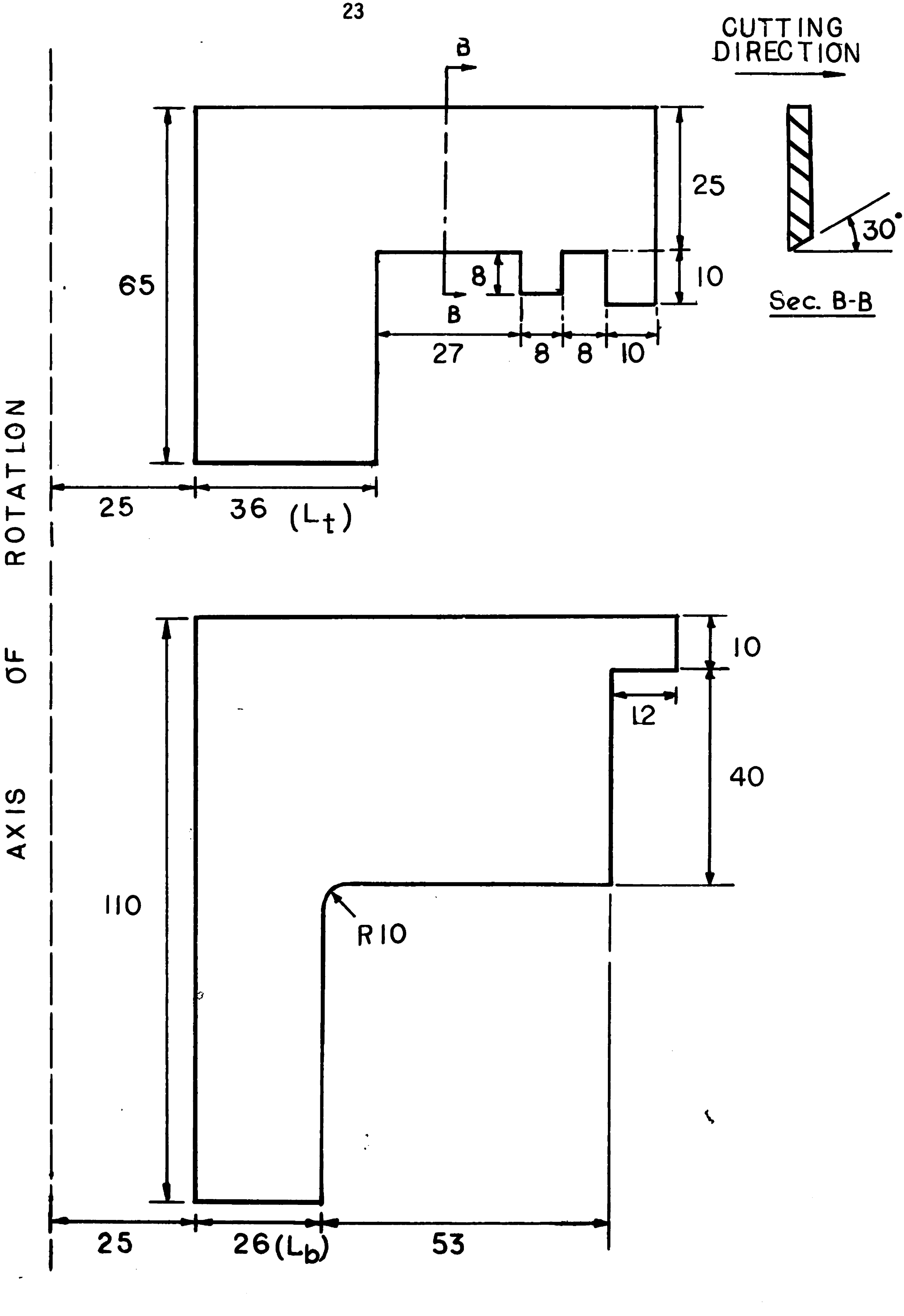

FIG. 6: Templates for rotor-hub-mold manufacturing

length L_t and L_b of the templates were made slightly larger (an increase by one millimeter was chosen arbitrarily). The bearing would be machined on a lathe to the desired dimensions after the rotor was molded. A short sleeve was also provided to ease the turning actions of the templates. Lastly, acetate sheets were attached to the outer edges of the set-up to form an enclosure. The sheets were held in place by nails.

Ultracal 30 was used as the mold manufacturing material for both the top and bottom molds. After mixing with the right proportional of water, the gypsum was introduced into the set-up and then cut into the desired shape while in the plastic stage by the template, Excessive gypsum was drained through holes drilled in the base to prevent the newly formed surfaces from being damaged. The top mold is shown in FIG. 7.

Sixteen slots in the shape of the rotor-blade profile were provided for the fitting of the rotor blades. In preparing the appropiate mold for these slots, short blades as shown in FIG. 8 were manufactured with wax using the techniques given in section 3.2. These wax blades had a length of 10 millimeters which corresponded to the depth of the blade root. As the blades would be buried inside the hub after the latter was molded, wax was used in the manufacture of these blades for easy removal. For the same reason, the two center cores required to complete the molding set-up were also made with wax. These

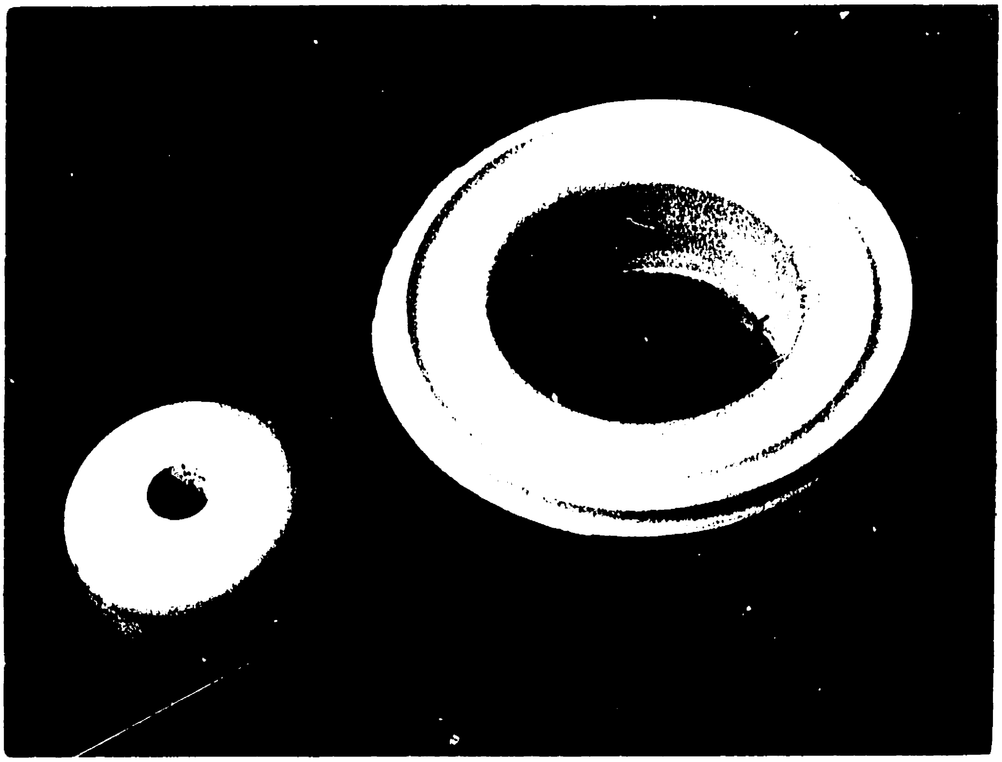

FIG. 7: Top gypsum mold and upper core for rotor-hub molding

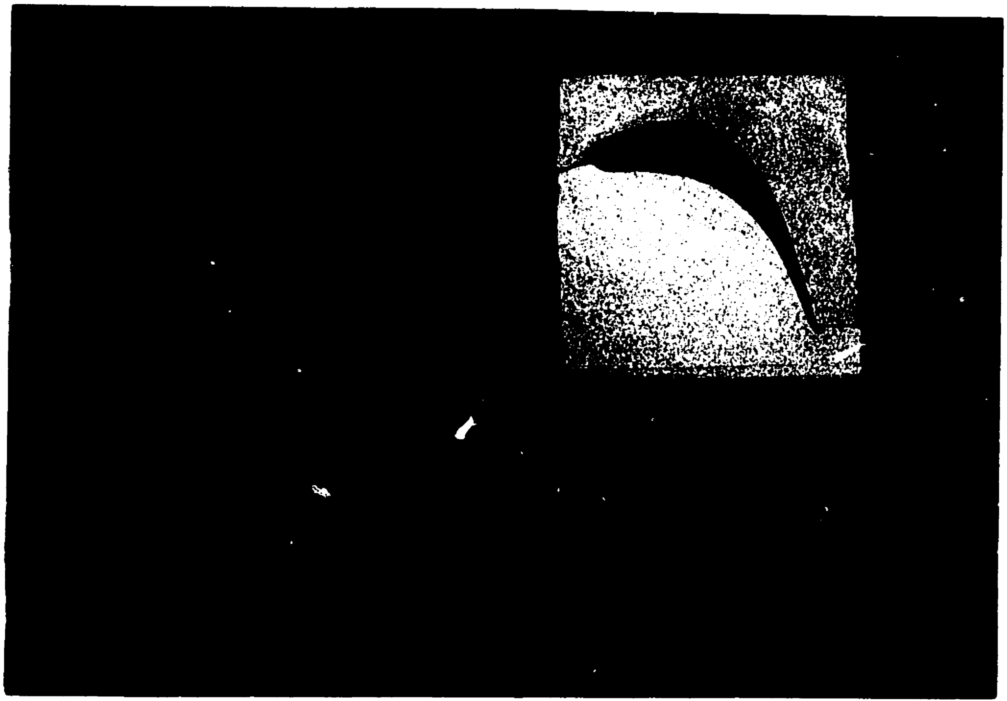

FIG. 8: Wax rotor blade with mold

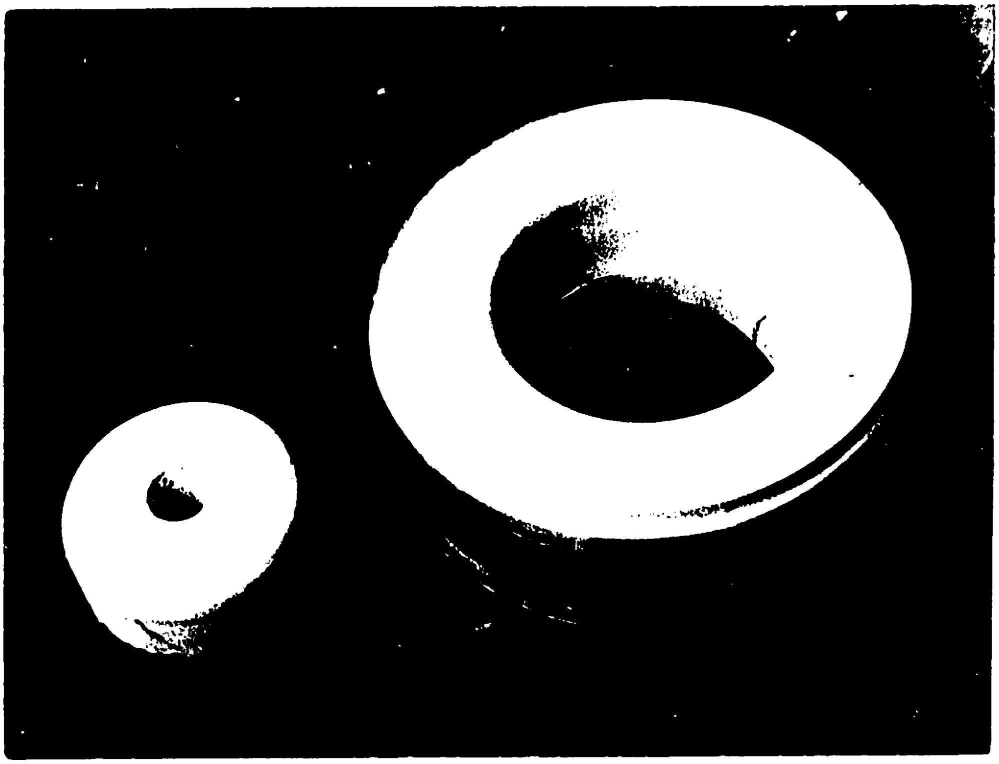

FIG. 7: Top gypsum mold and upper core for rotor-hub molding

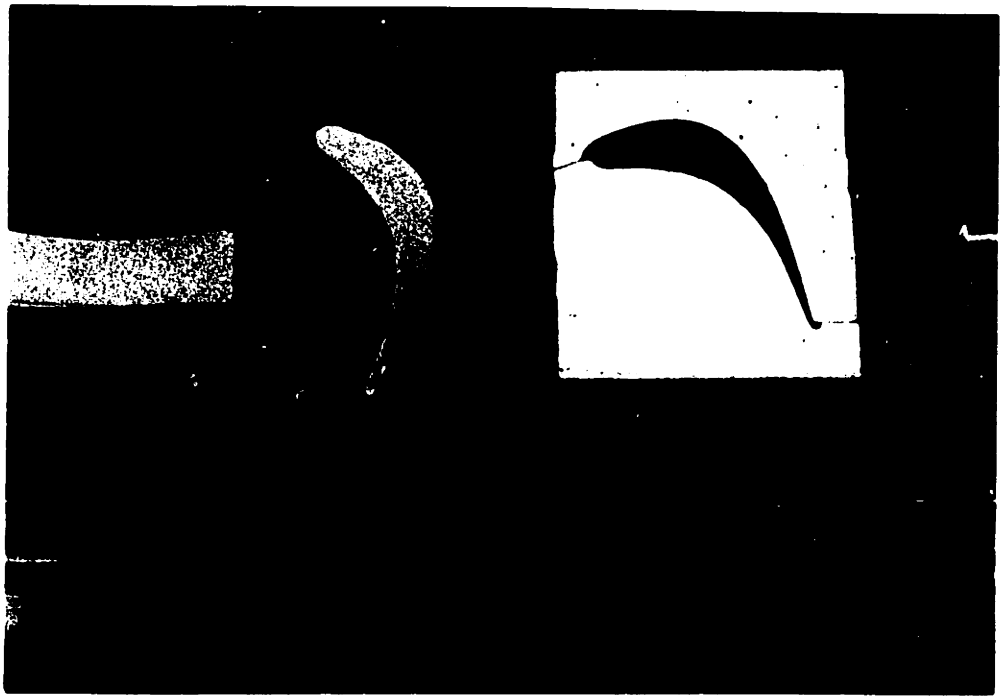

FIG. 8: Wax rotor blade with mold

cores, together with the molding set-up employed in their manufacture, are shown in FIG. 9. Wax was first melted and introduced into the set-up. After solidification, the wax chunk was removed together with the tubing and machined to the desired configuration and dimension.

The next step involved the assembling of the molding set-up. Both the top and the bottom halves of the set-up are shown in FIG. 10. The cores were aligned by the pivot and were fixed to the corresponding bases. The sixteen wax blades were glued onto the side wall of the bottom mold at an angle of 22.5 degrees apart; care was taken to make sure that they were in the right orientation. Holes were drilled in the base of the top mold as shown to release trapped air during the molding processes. CEARA base wax was applied on all the molding surfaces, and the set-up was ready for use.

In the molding of the rotor hub, the top half of the set-up was first removed. Polylite 33-031 with chopped-strand mat was added into the bottom mold. A wooden ring was then added into the set-up to displace a portion of the resin. This would reduce the thickness of the center section and hence the amountof heat generated when the gypsum set. The top half was then fitted on the bottom one, alignment being provided by

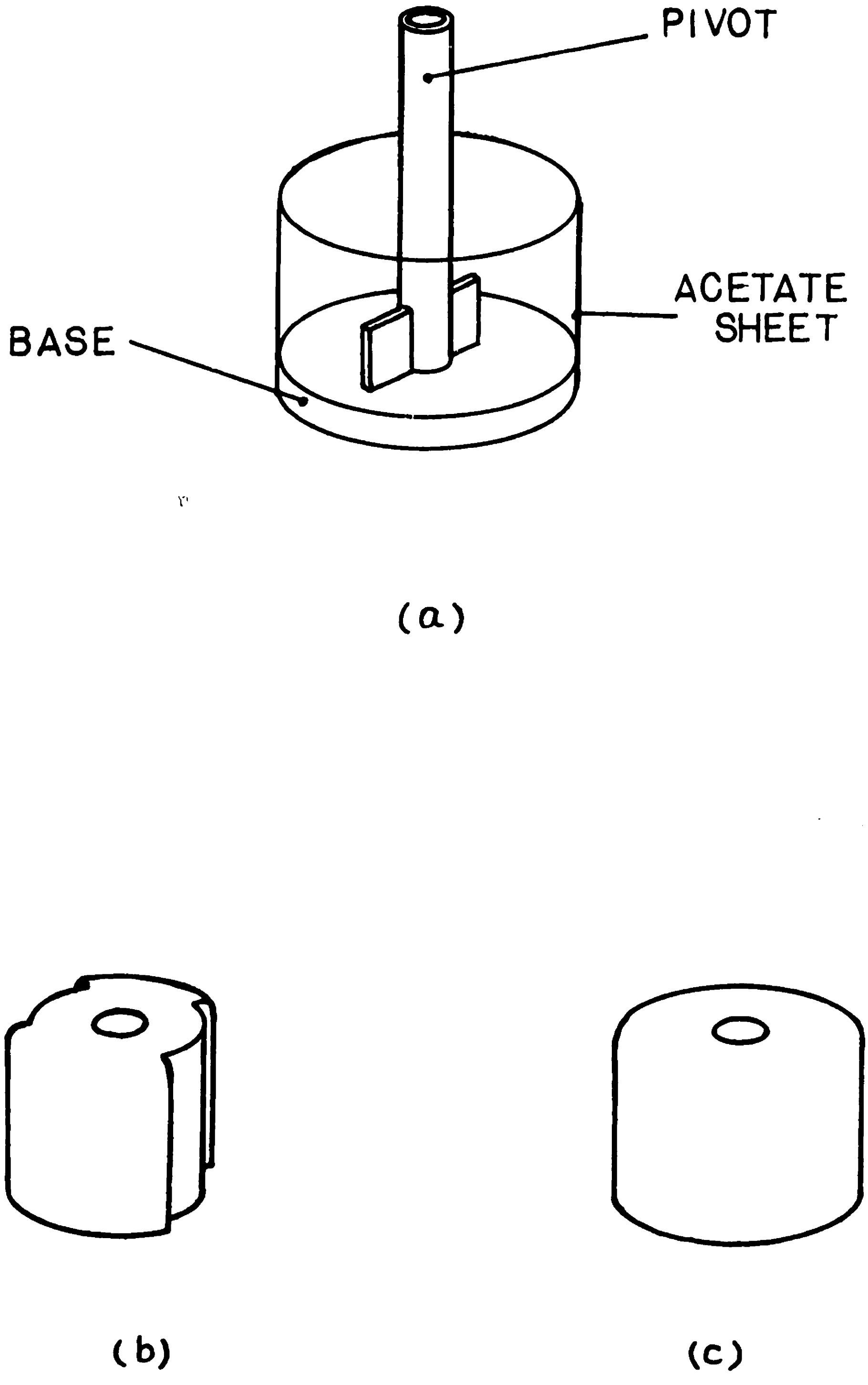

FIG. 9: (a) Set-up for wax core manufacturing
(b) Lower core
(c) Upper core

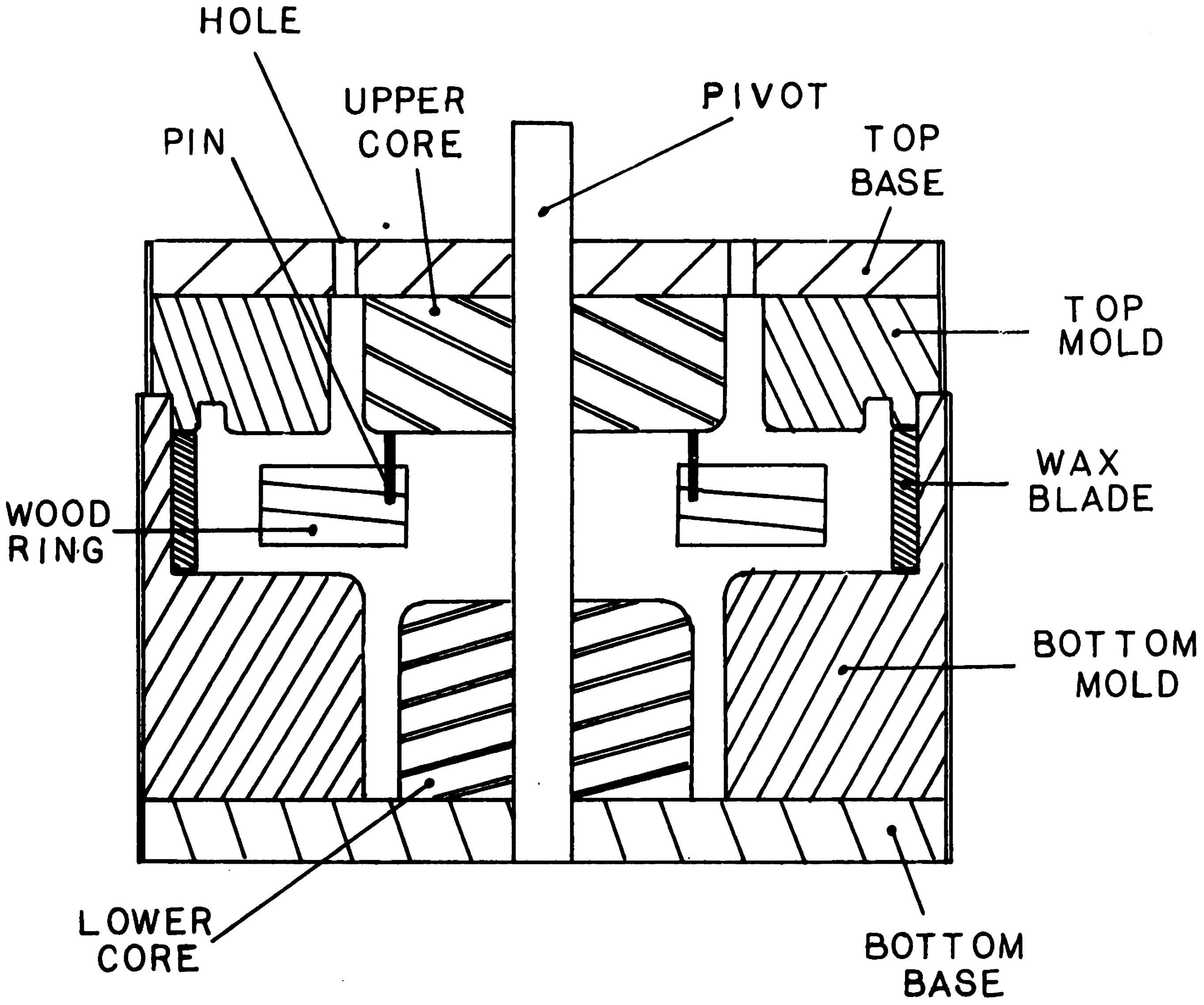

FIG. 10: Molding set-up for rotor- hub manufacturing

the pivot tube and the edges of the molds. The wooden ring under the buoyancy action of the resin was prevented from making contact with the upper mold surface by several pins. Additional resin was introduced to fill the entire set-up via the holes in the base of the top mold. After the resin had set, the molds were broken and the plastic hub was removed carefully from the set-up.

Three water passages and the one-inch center hole were drilled. The bearings were turned on a lathe to the specified dimensions and tolerances as given in [1]. The edges of the hub were trimmed. The completed rotor is shown in FIG. 11.

3.3.2. The stator hub

The stator hub was manufactured with procedures similar to those given in the last section. Therefore, only a brief description is given here.

The templates used for the cutting of the gypsum molds are shown in FIG. 12. The molding set-up is shown in FIG. 13. The top part of the set-up was made with gypsum; it was turned out by the corresponding template. The bottom part consisted of a pivot erected on a circular wooden base, an inner wax core aligned by the pivot, and a gypsum mold. In this case, the bearing diameter and hence the diameter of the wax core were

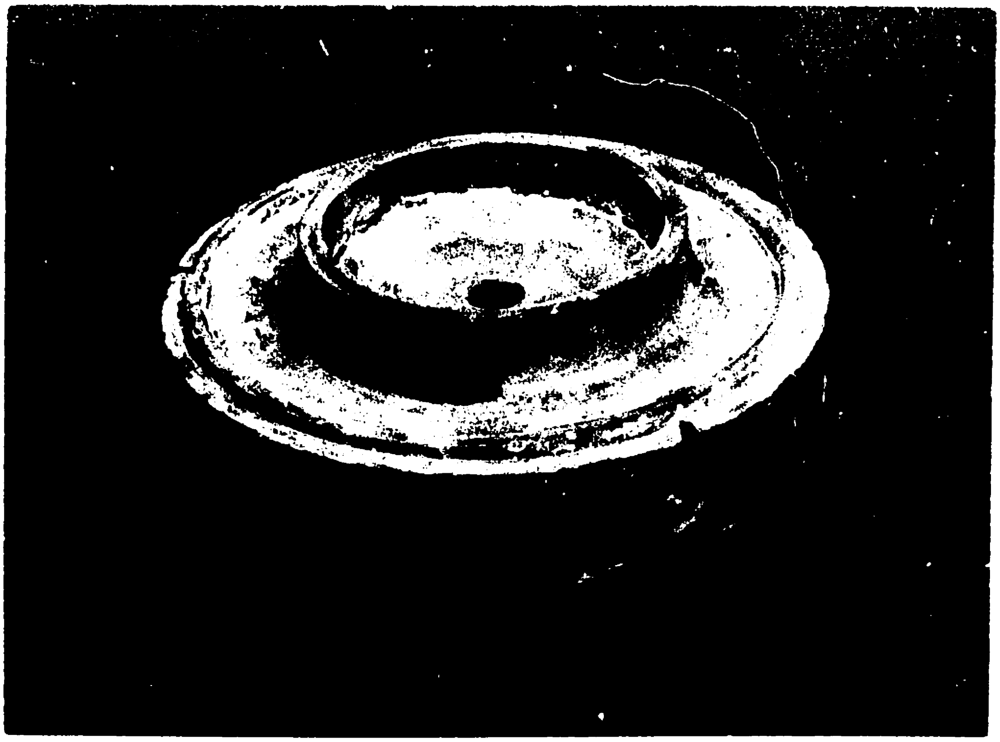

FIG. 11: Molded rotor-hub

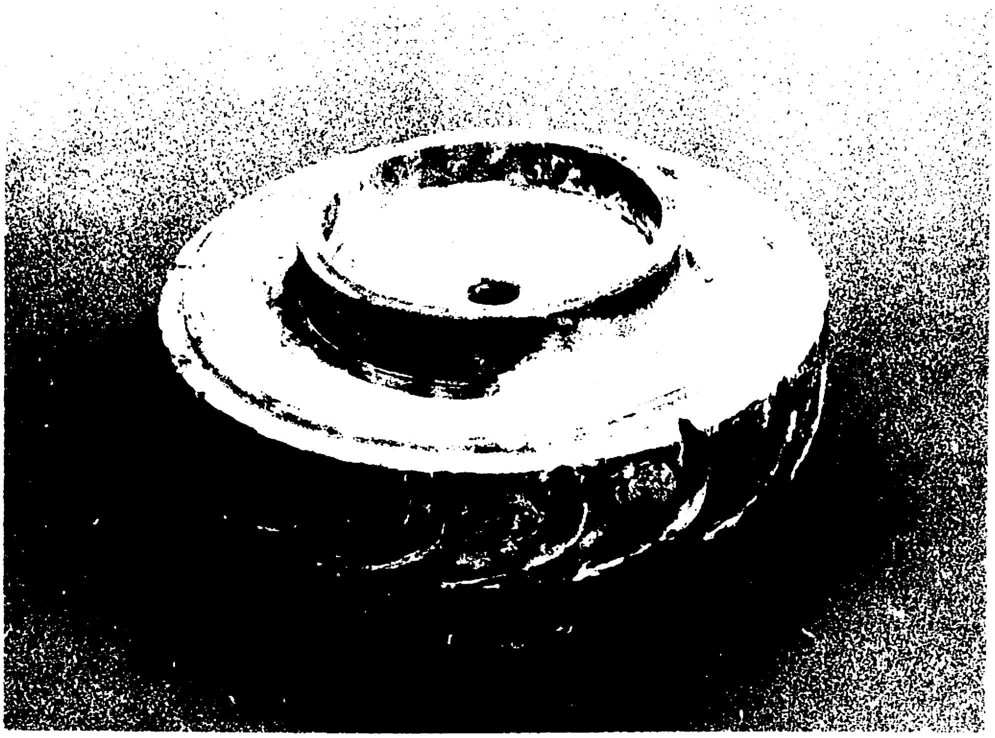

FIG. 11: Molded rotor-hub

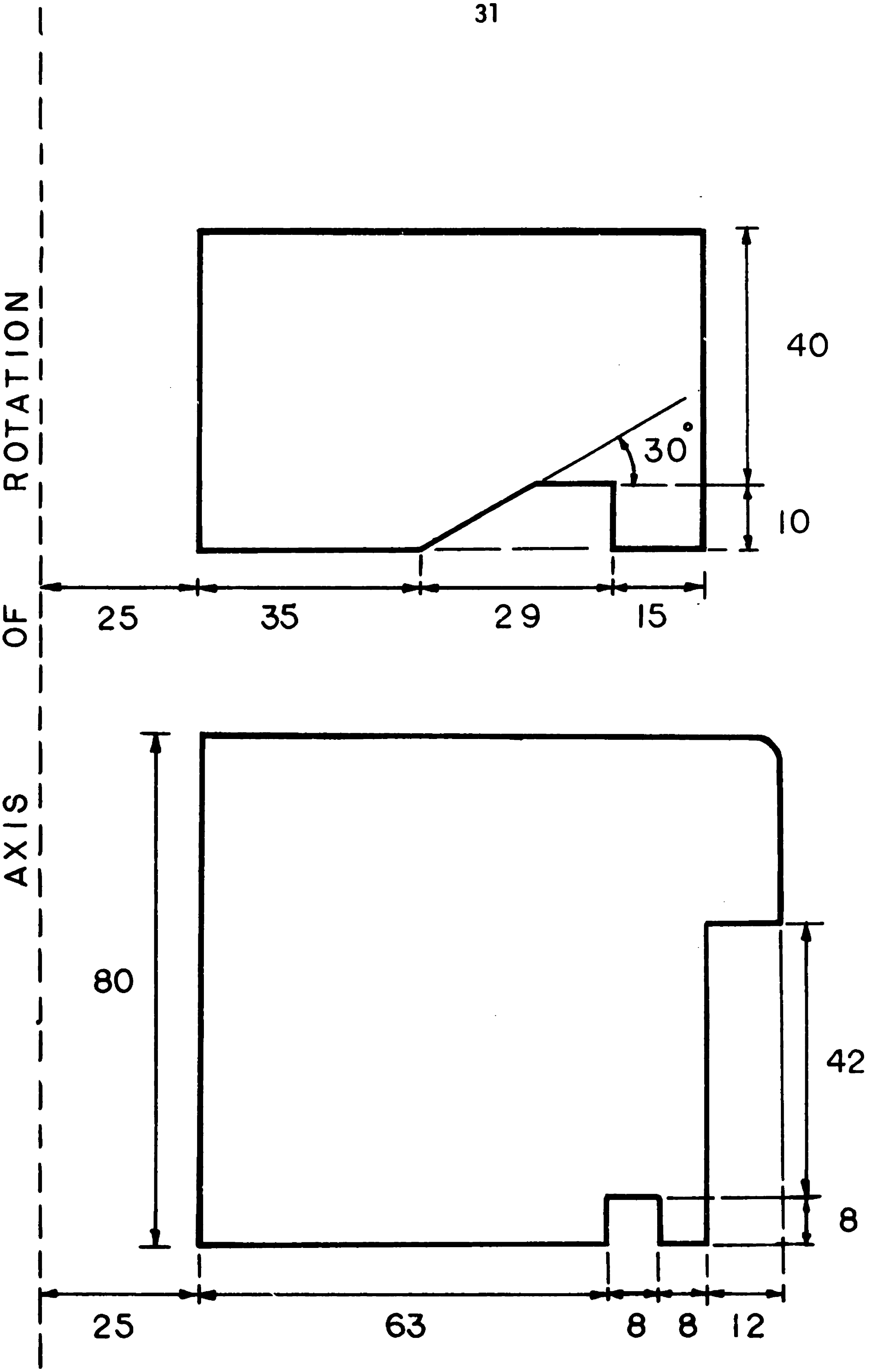

FIG. 12: Templates for stator-hub-mold manufacturing

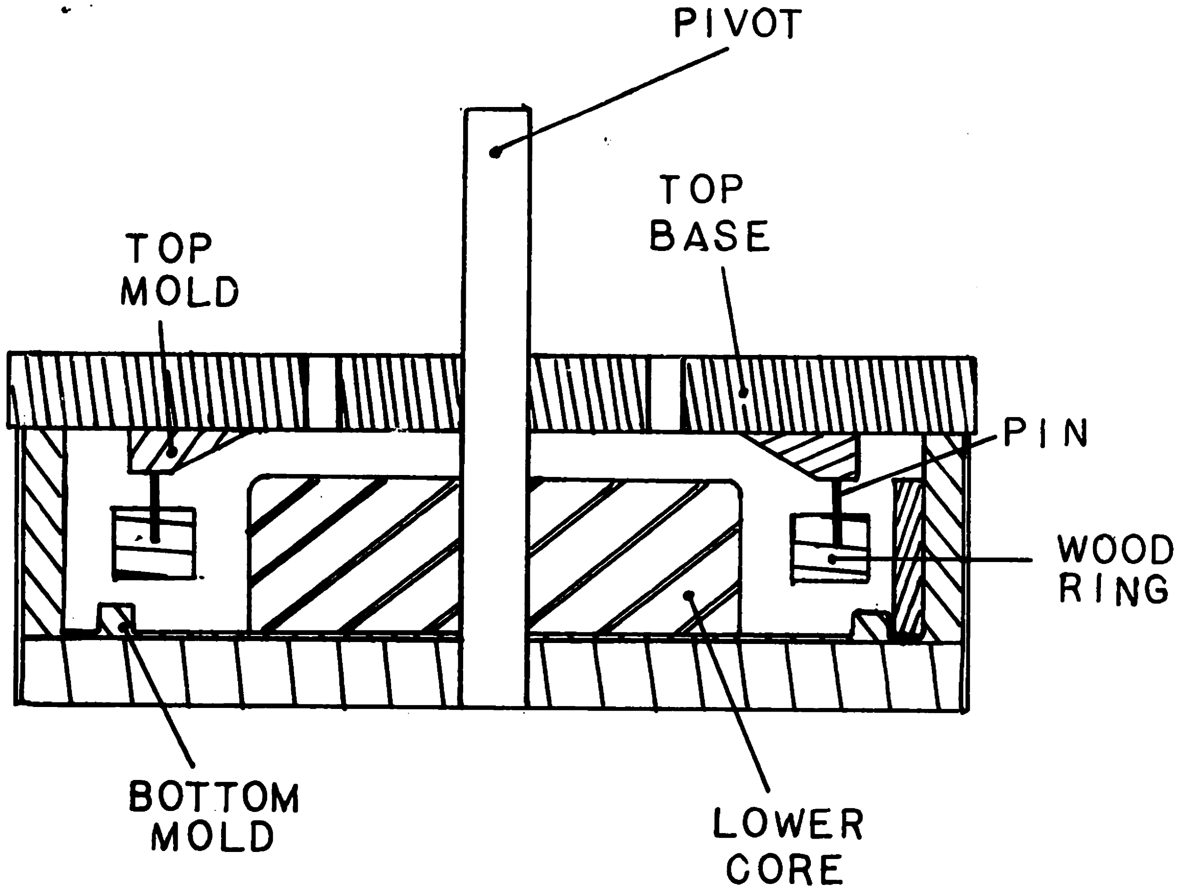

FIG. 13: Molding set-up for stator-hub manufacturing

made slightly smaller than specified. Subsequent machining after the hub was molded would reduce it to the specified dimension and tolerance. Fifteen short rotor blades made with wax were glued to the side wall of the bottom mold at an angle of 24 degrees apart. These blades had a height of 8 millimeters inorder to avoid interference with the groove. In carrying out the molding process, the set-up was first filled to the top with previously prepared resin-fiberglass mixture. Again, a wooden ring was added to reduce the thickness of the central section. The top mold was then lowered onto the bottom one until they made contact with one another. Excessive resin was squeezed out of the set-up by this action. Alignment of the top and bottom molds was again provided by the pivot tube. When the resin had set, the hub was removed by destroying the molds carefully. The center hole was then patched and the six water passages were drilled. The groove and the bearing were machined on a lathe ; all the edges were trimmed. The finished component is shown in FIG. 14.

3.3.3 The diffuser hub

The procedures required for the manufacture of the diffuser hub were again similar to those described in section 3.3.1. The template used in the gypsum mold cutting is shown in FIG. 15 , the molding set-up in FIG.16. The gypsum mold

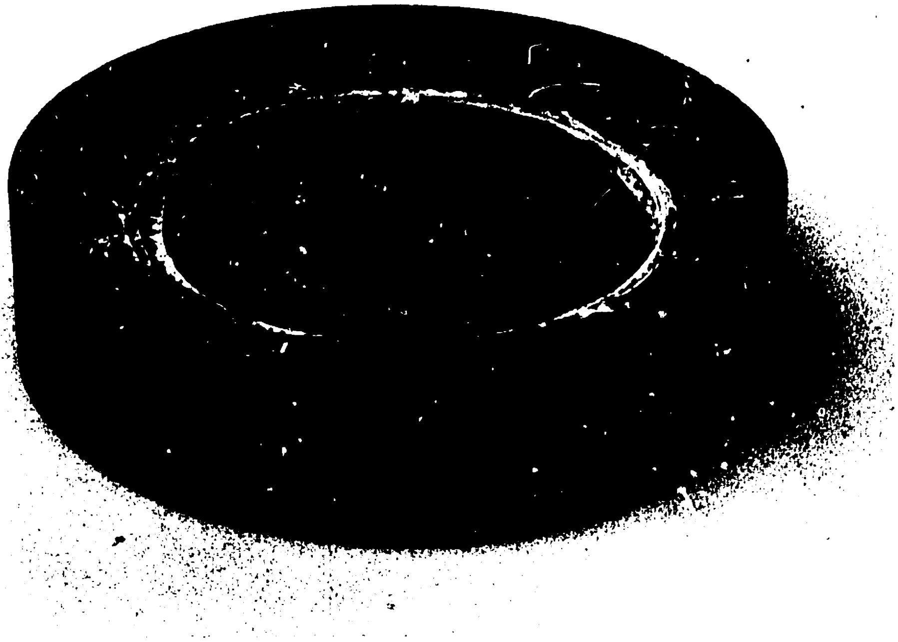

FIG. 14: Completed stator section —stator hub with blades and blade-mount assembled

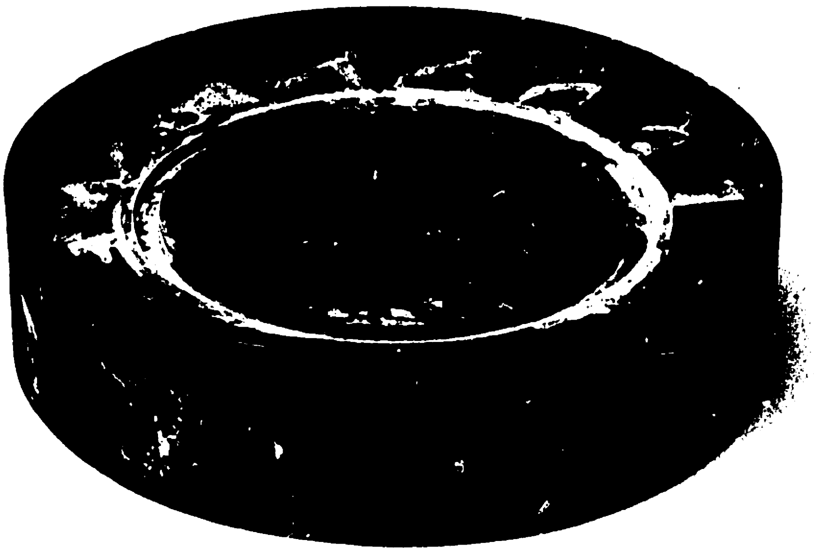

FIG. 14: Completed stator section —stator hub with blades and blade-mount assembled

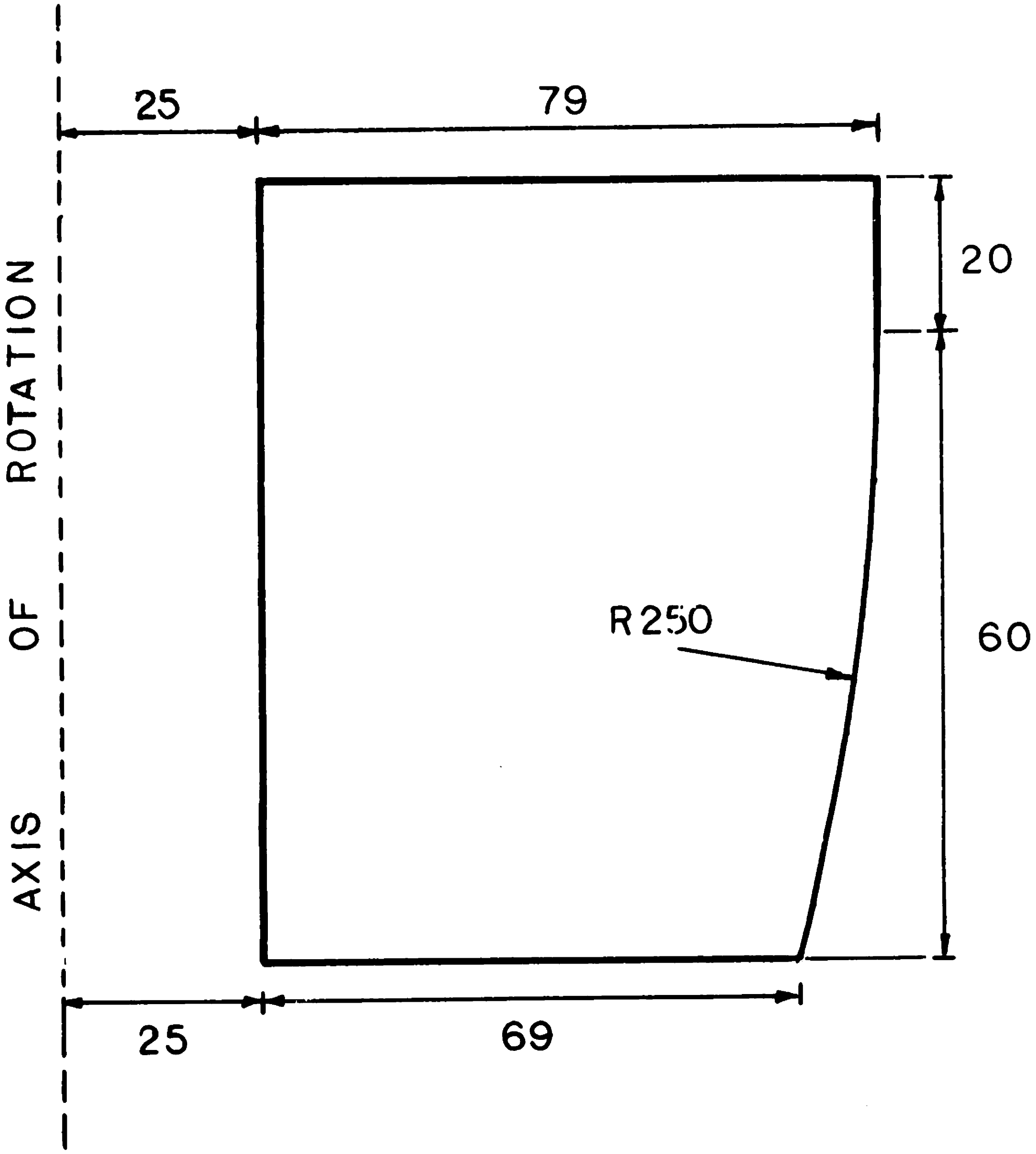

FIG. 15: Template for diffuser-hub-mold manufacturing

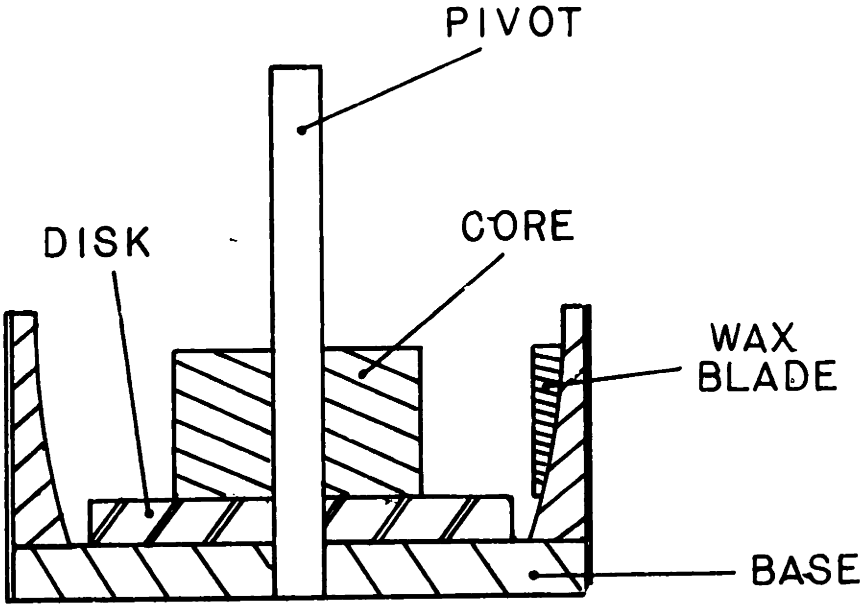

FIG. 16: Molding set-up for diffuser-hub manufacturing

was first formed and fifteen diffuser **blades** made with wax were glued onto its side wall at an angle of 24 degrees apart to form slots on the hub for subsequent blade fitting. These blades were 10 millimeters high and were manufactured with the techniques described in section 3.2. The core and the disk at the center were made with wax for easy removal after the hub was molded. Again the core was made slightly smaller to provide room for subsequent hub machining inorder to meet the specified bearing tolerance. A wooden ring was added to eliminate the thick central section and hence the amount of heat production. When the resin had set, the top surface was faced on a lathe, the passage for thrust-relief water was drilled, and the bearing was turned to the desired dimension. A Teflon sheet which formed the thrust-bearing contact surface was glued onto the top surface with rubber cement. The completed hub is illustrated in FIG. 17 .

3.3.4 <u>The nose</u>

The required molds are shown in FIG. 18. The inner mold consisted of a foam core with an outer layer of wax. It rested on a wooden base with a pivot tube at the center. Foam was used to reduce the amount of wax needed. It also reduced the manufacturing effort and the subsequent removal effort after the nose

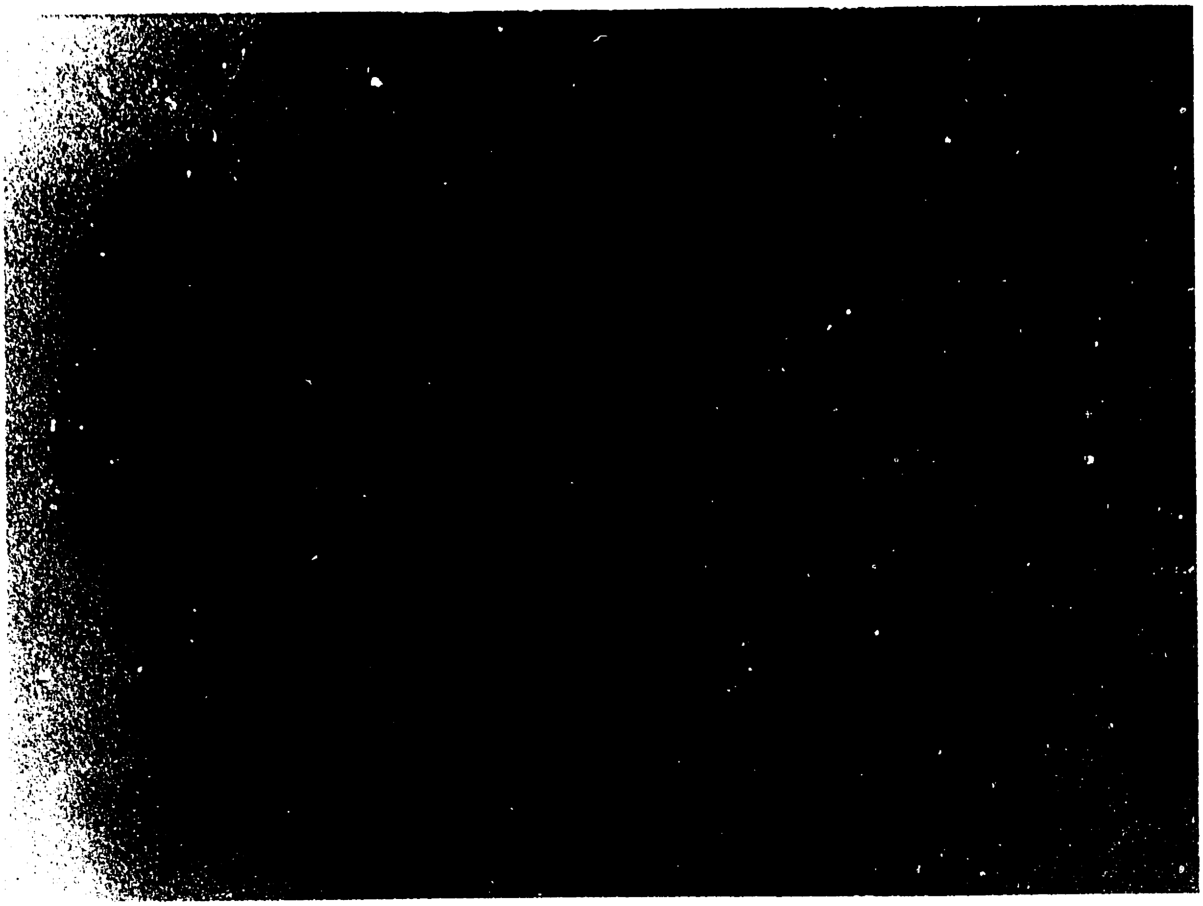

FIG. 17: Molded diffuser hub

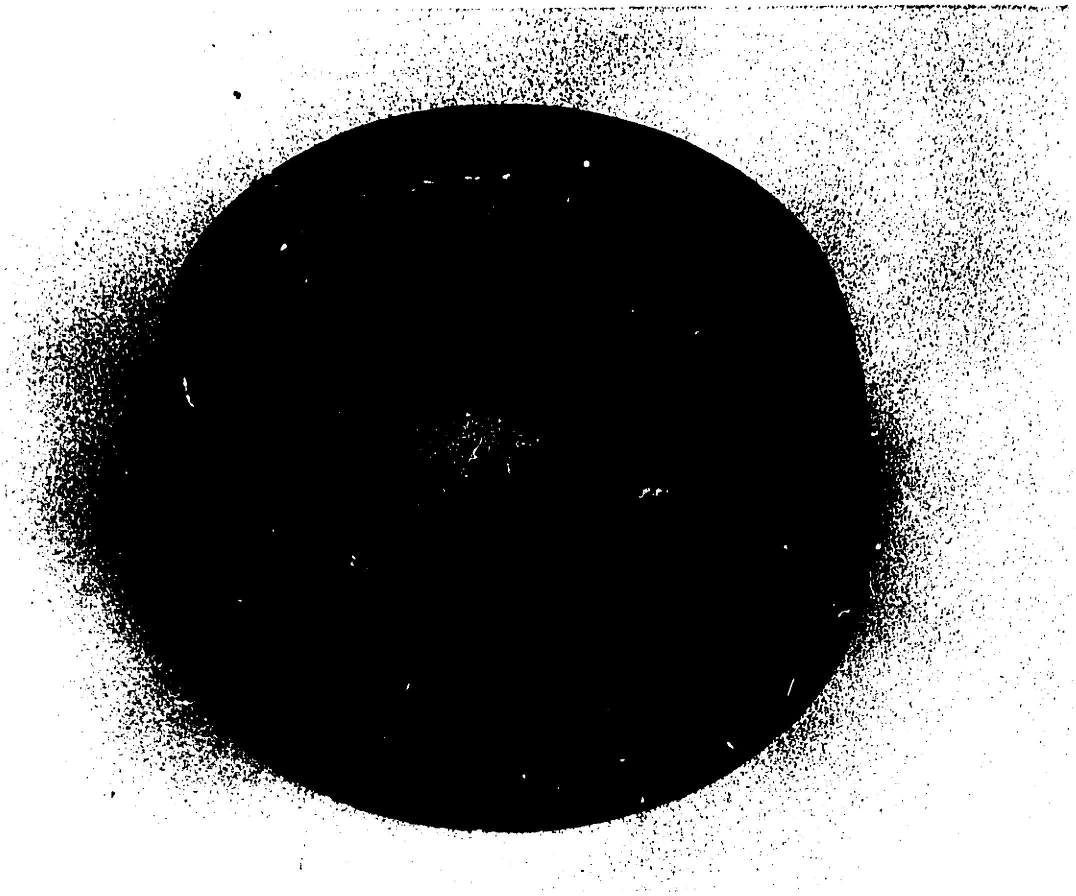

FIG. 17: Molded diffuser hub

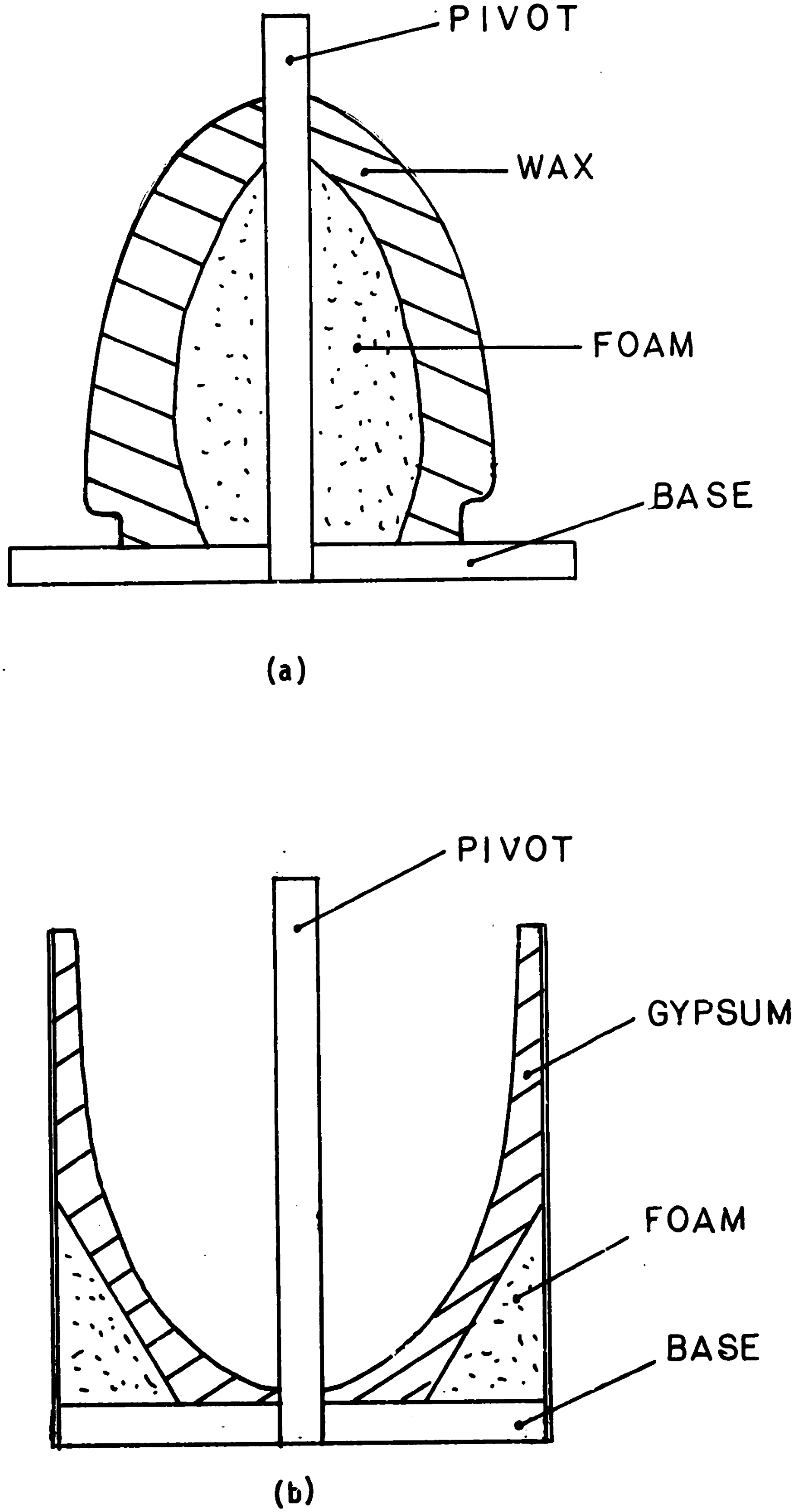

FIG. 18: (a) Inner mold, (b) outer mold for nose manufacturing

was molded. In the making of the mold, melted wax was first applied onto the foam surface to form a wax layer; the latter was then cut into the desired shape by the template (heated shortly beforehand) shown in FIG. 19(a). Holes were drilled on the base to provide passages for the escape of trapped air and the addition of resin during the molding process. The outer mold was made with gypsum. The template used is shown in FIG. 19(b).

In the molding of the component, resin with fiberglass was first added into the outer mold. The pivot tube of the inner mold was removed, the mold was then turned up-side-down and fitted into the pivot of the outer one, the desired spacing being provided by a sleeve as shown in FIG. 20. A wooden ring with a squared-cross-section was attached at the top of the inner wall to complete the specified shape. Additional resin was introduced through the passages in the inner mold base till the set-up was filled to the level shown. The finished component upon the removal of all the molds is shown in FIG. 21.

3.3.5 The blade-mounts

A blade-mount was provided for the stator and the diffuser sections. The molding set-up are shown in FIG. 22 and 23. As the manufacture of the molds and the molding procedures are similar to those given previously, they are not repeated here.

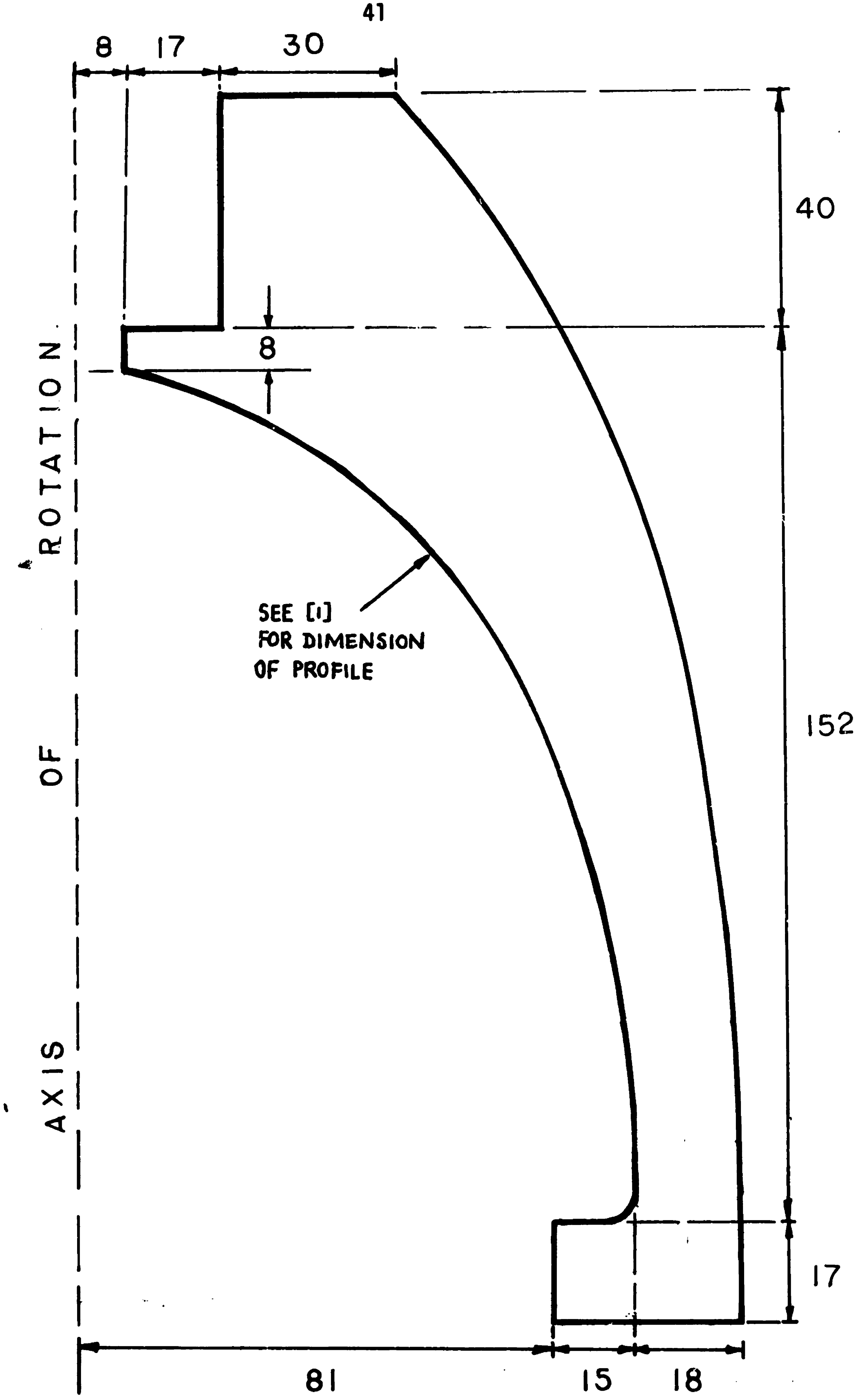

FIG. 19(a): Template for inner mold manufacturing for nose

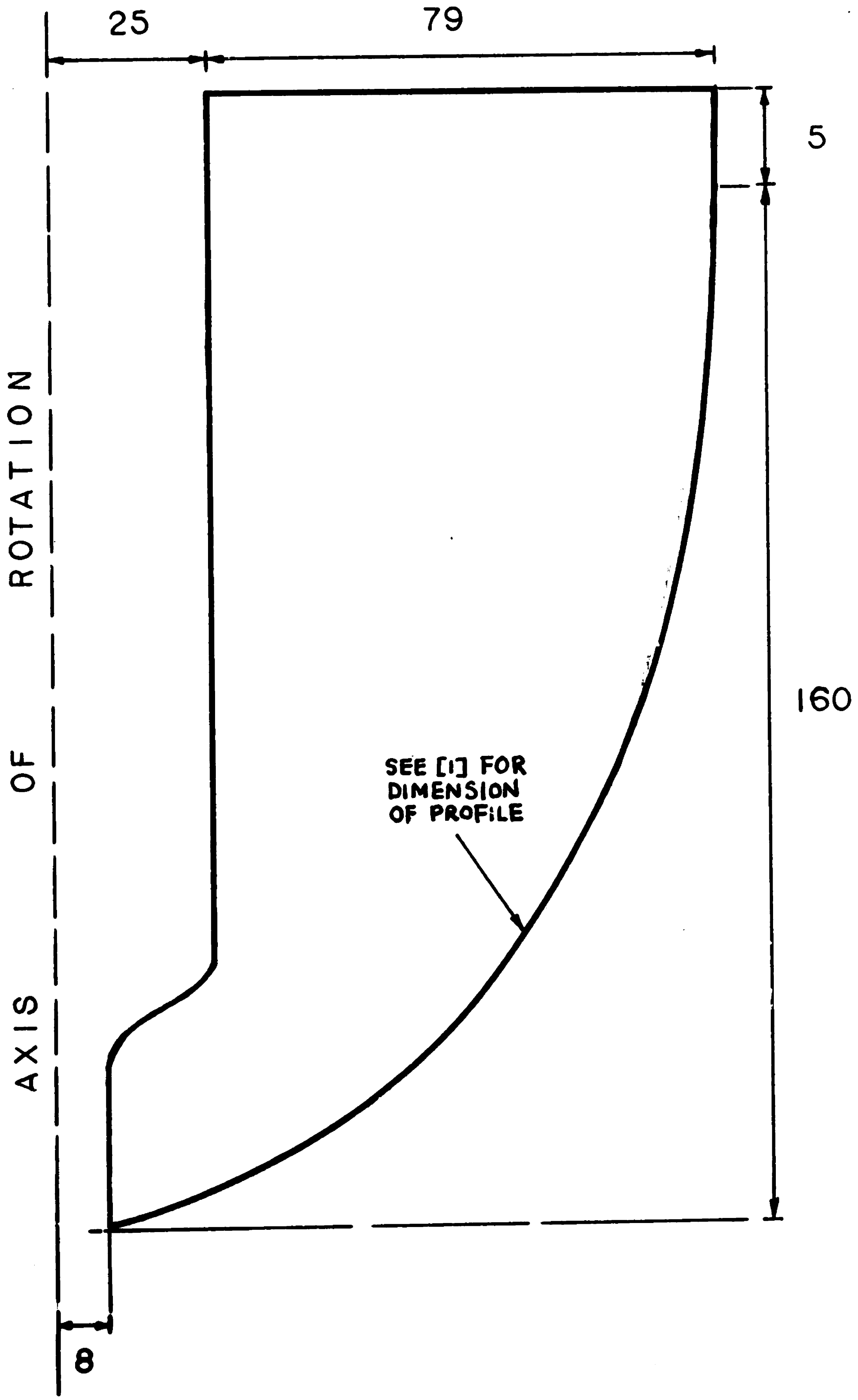

FIG. 19(b): Template for outer mold manufacturing for nose

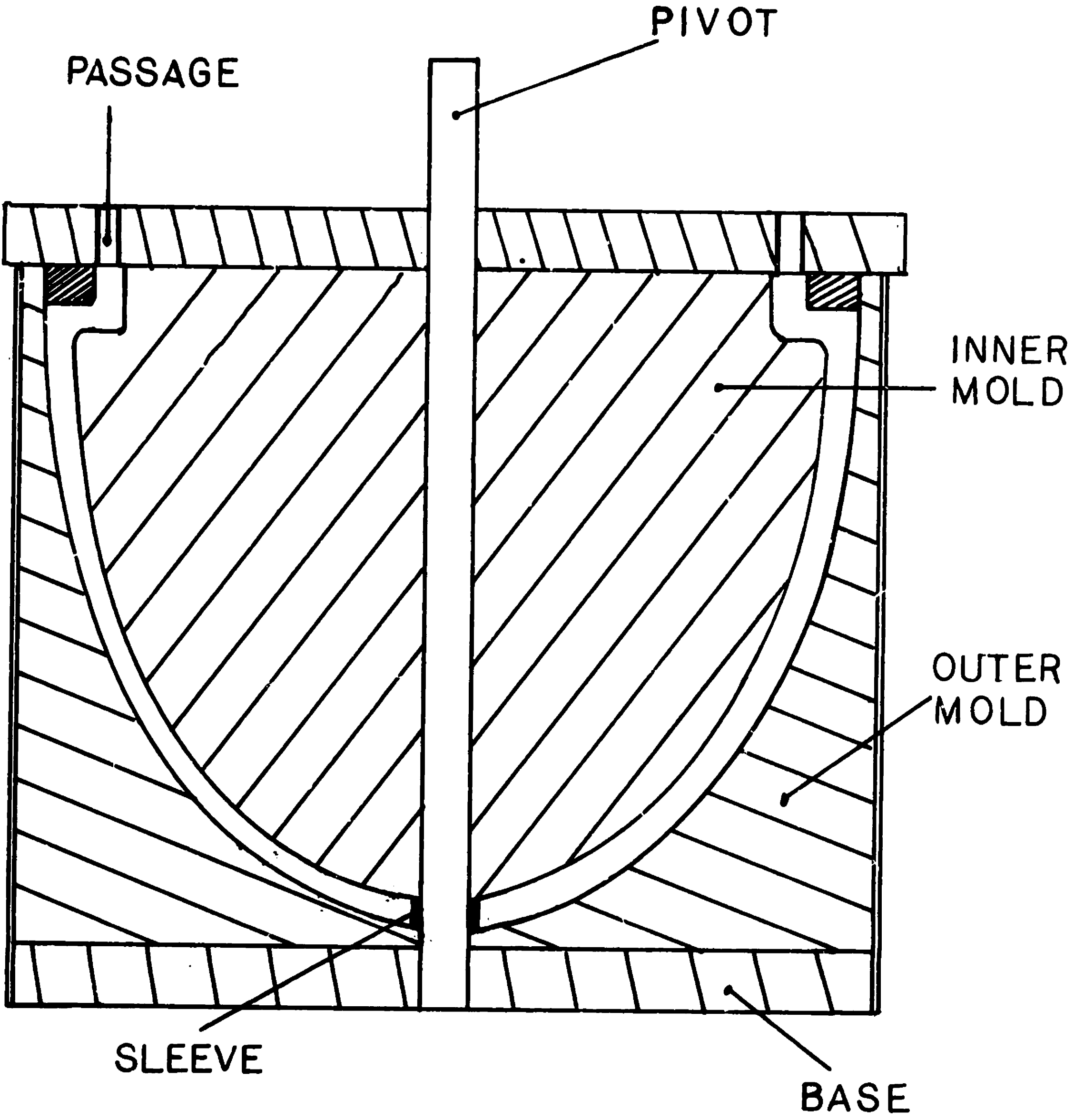

FIG. 20: Set-up for the molding of the nose

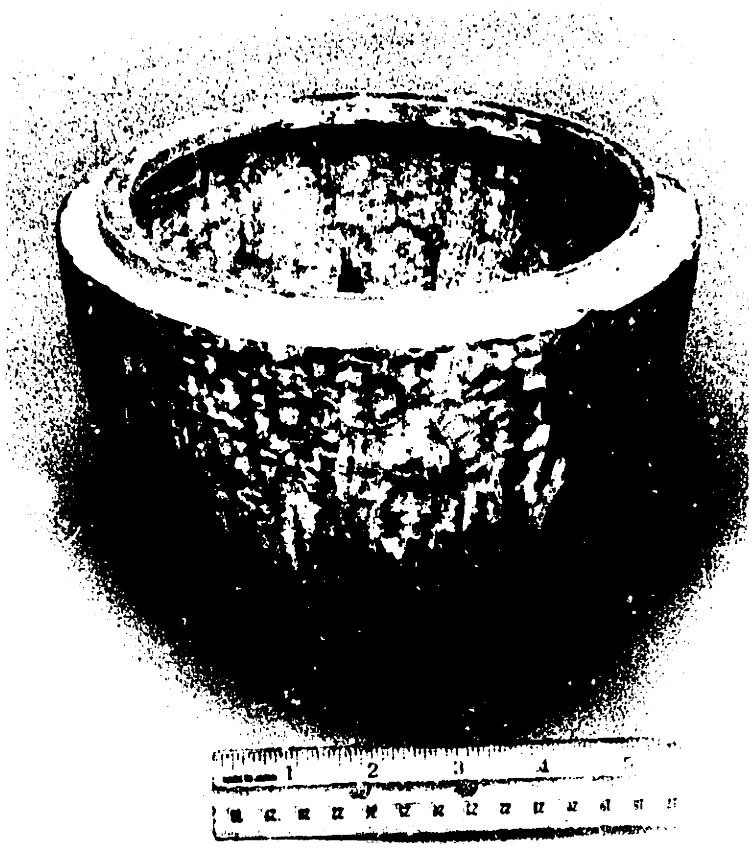

FIG. 21: Molded nose

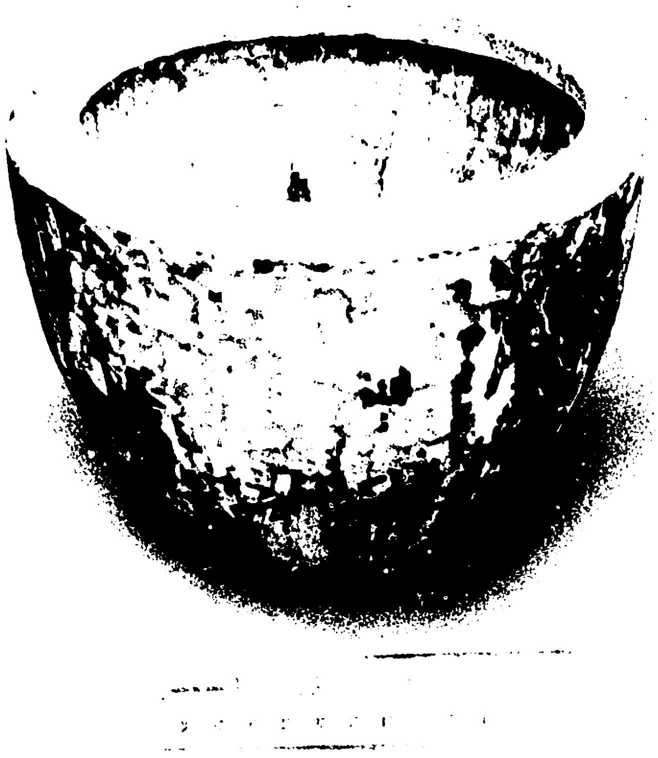

FIG. 21: Molded nose

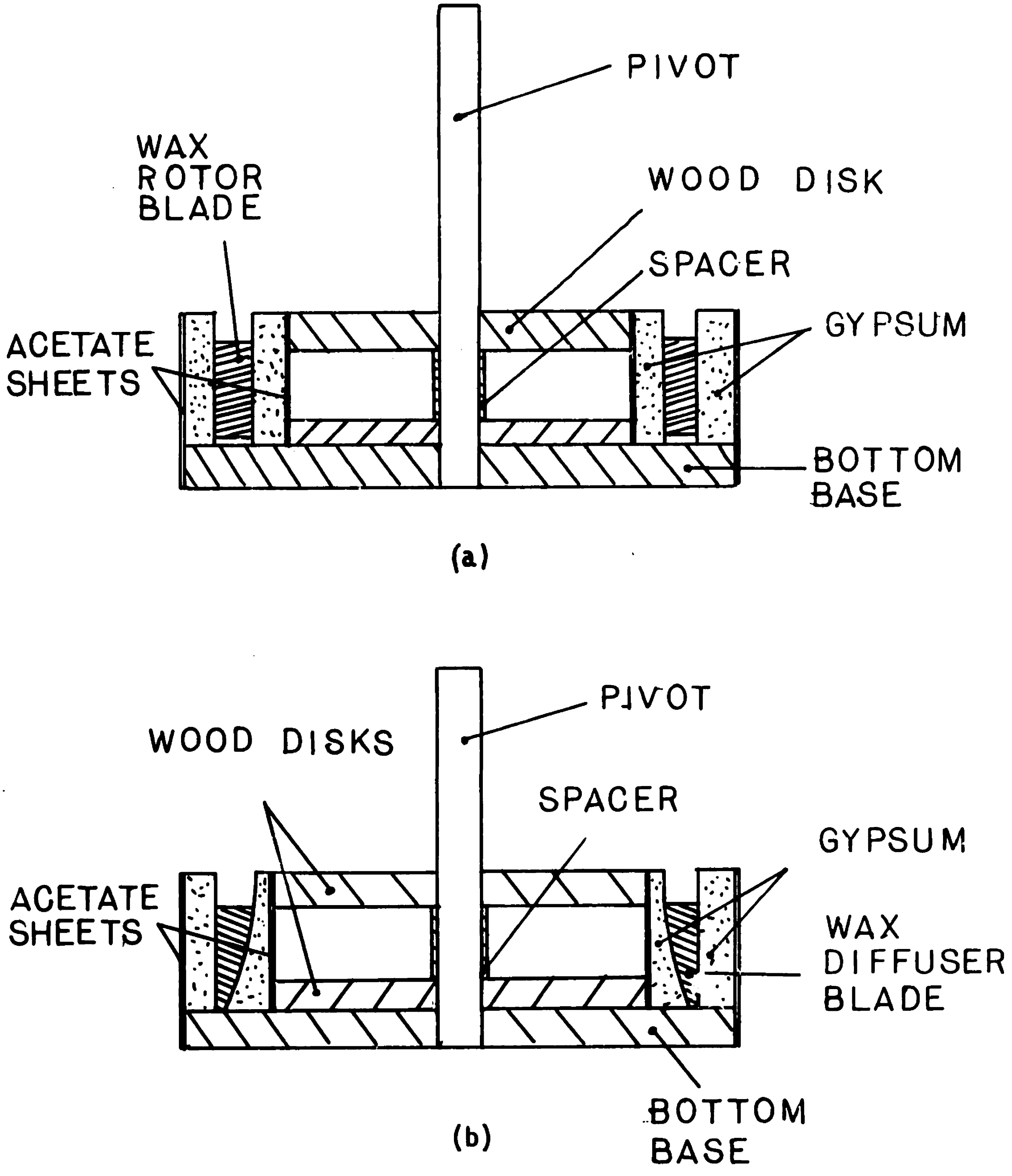

FIG. 22: (a) Molding set-up for stator-blade-mount
(b) Molding set-up for diffuser-blade-mount

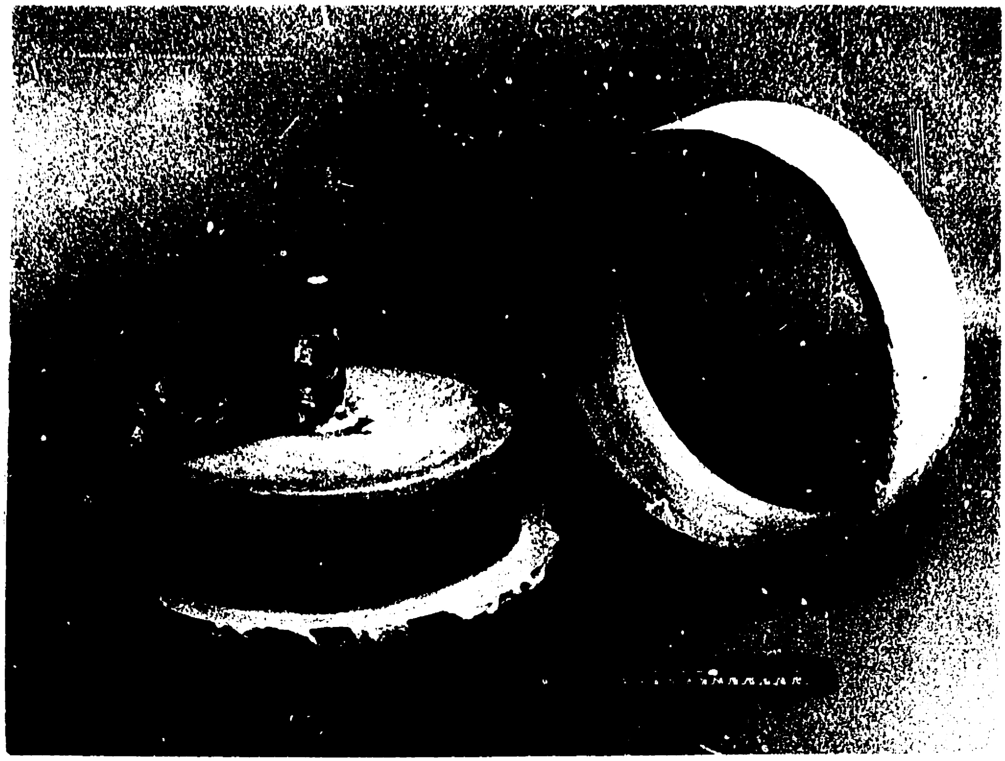

(a)

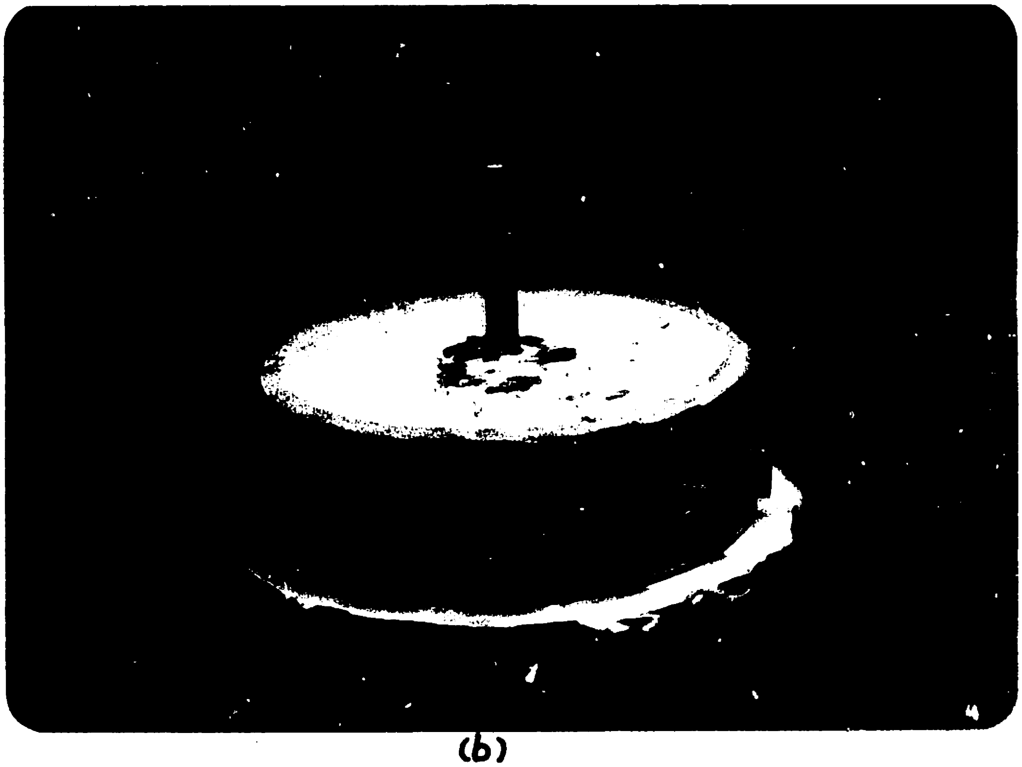

(b)

FIG. 23: (a) Set-up for mold manufacturing for rotor-blade-mount
(b) Inner mold of set-up with wax blades attached

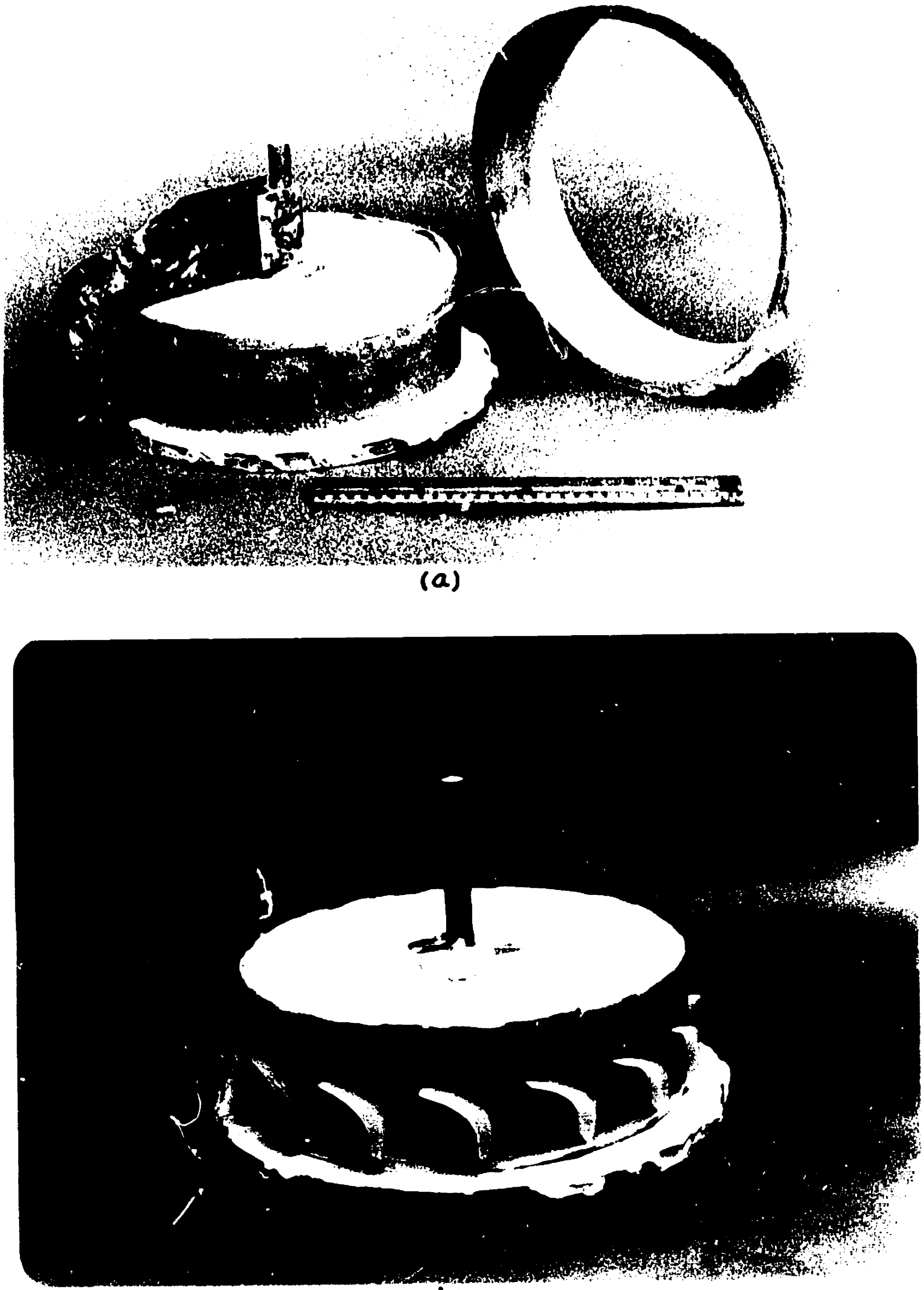

(a)

(b)

FIG. 23: (a) Set-up for mold manufacturing for rotor-blade-mount
(b) Inner mold of set-up with wax blades attached

The templates used for the cutting of the gypsum molds are shown in FIG. 24. The wax blades were glued between the wall of the inner and outer molds at an angle of 24 degrees apart. A wooden plug was machined to fit into these mounts. After the resin had set, the blade-mounts were removed from the set-ups. They were then mounted on the plug in turn and trimmed on a lathe. The finished mounts are shown in FIG. 25.

3.4 The housing units

The housing units consisted of two parts: the main housing and the drain chute. The manufacturing procedures for both of the components are given in the following sections.

3.4.1 The main housing

The profile of the entrance section of the housing was modified to provide the flow with a more gradual acceleration. The modified profile is shown in FIG. 26; a comparison with the old configuration is given in TABLE 3.

A drawing of the molding set-up is given in FIG.27. The in-between section was made with gypsum; it was formed by stacking twomolds one on top of the other. These molds were formed by the templates shown in FIG. 28 with techniques described previously. The top and bottom molds were aligned by an aluminum tubing as shown. The core of both the top and bottom molds were made hollow inorder to reduce material and effort in their manufacturing, and to ease their subsequent removal from the molded component. The

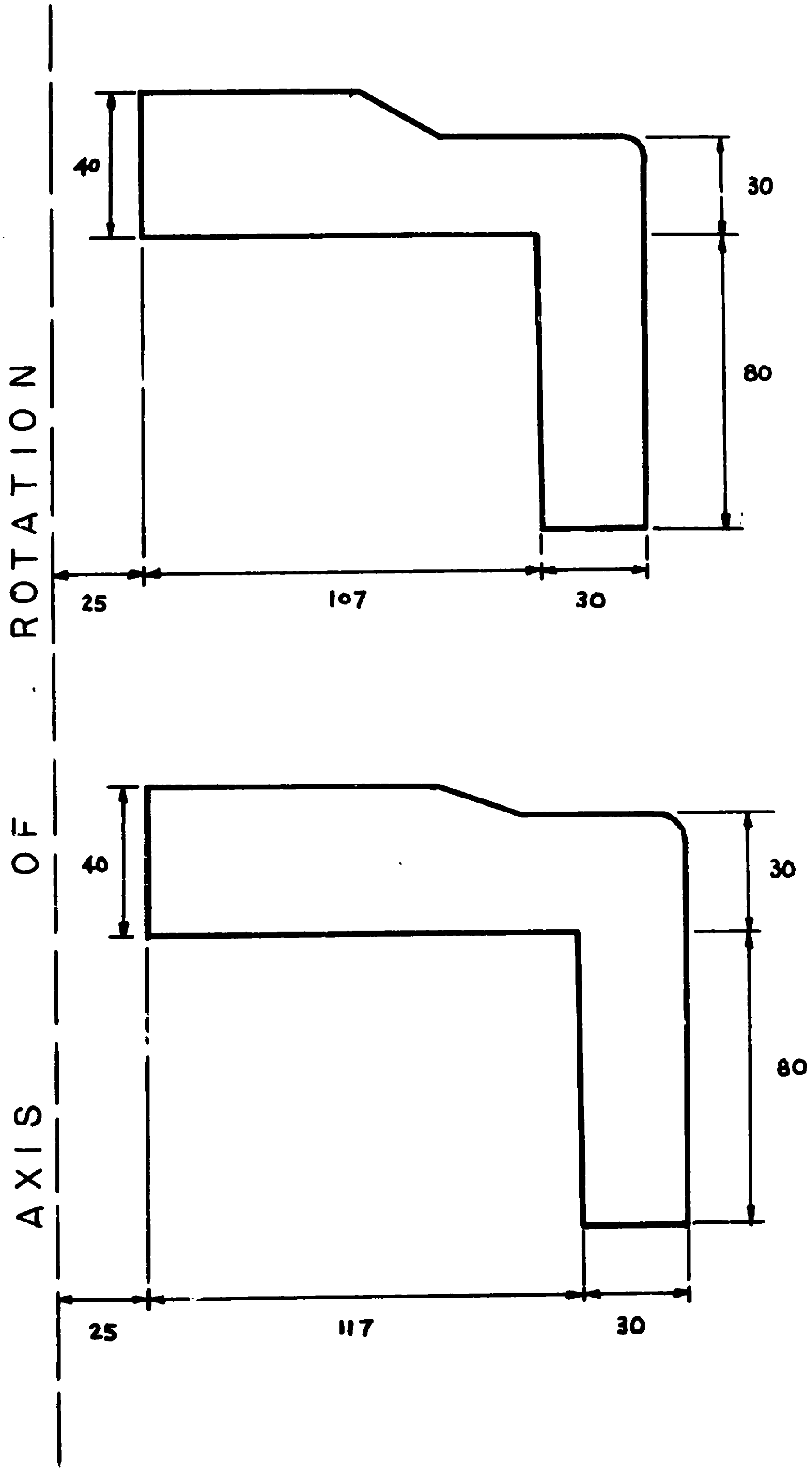

FIG. 24(a) Templates for rotor-blade-mount manufacturing

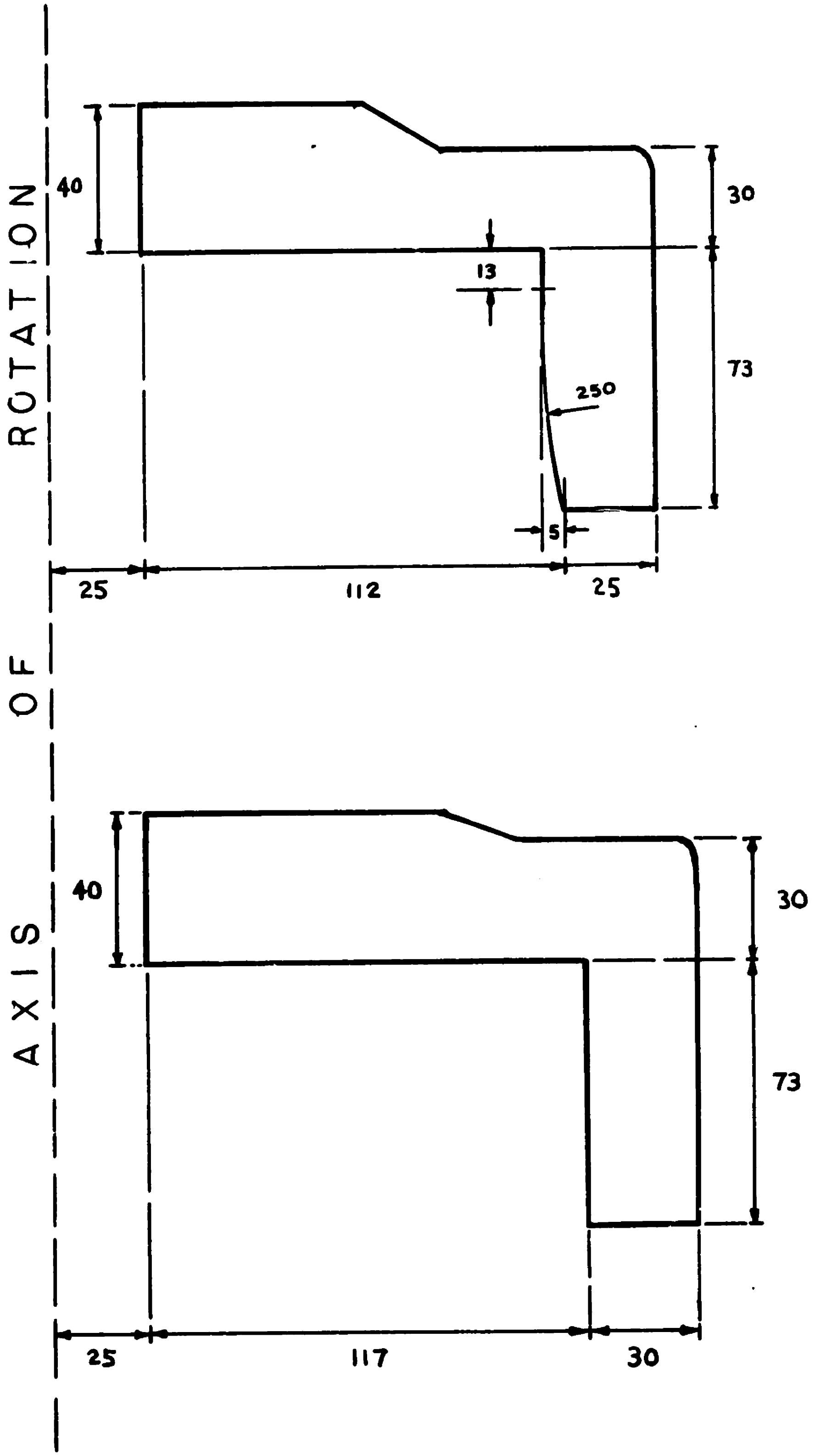

FIG. 24(b): Templates for diffuser-blade-mount manufacturing

FIG. 25: (a) Assembled stator section with the rotor in the middle and the diffuser hub on top

FIG. 25: (a) Assembled stator section with the rotor in the middle and the diffuser hub on top

FIG, 25(b): Assembled diffuser section

FIG, 25(b): Assembled diffuser section

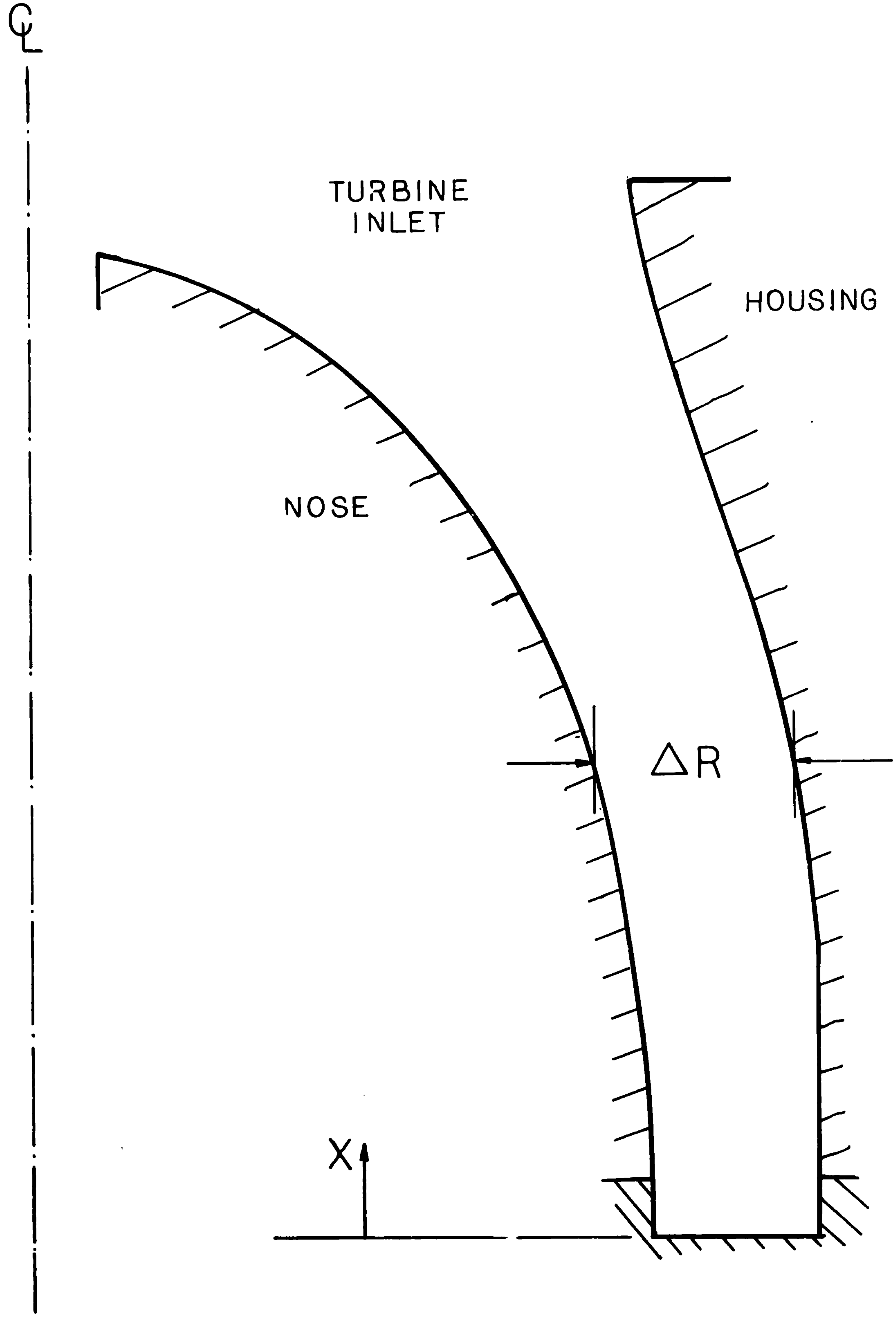

FIG. 26: Modified inlet wall profile of main housing

TABLE 3: COMPARISON OF THE MODIFIED ENTRANCE SECTION WITH THE ORIGINAL ONE

$X^{\dagger}$ (mm)	$\Delta R^{\dagger}$ (mm) (original)	$\Delta R^{\dagger}$ (mm) (new)
0	28.0	28.0
10	28.0	28.0
50	30.0	30.0
75	30.0	33.5
100	33.5	36.5
125	43.0	43.0
150	61.0	58.0
180	101.5	101.5

[†] see FIG. 26.

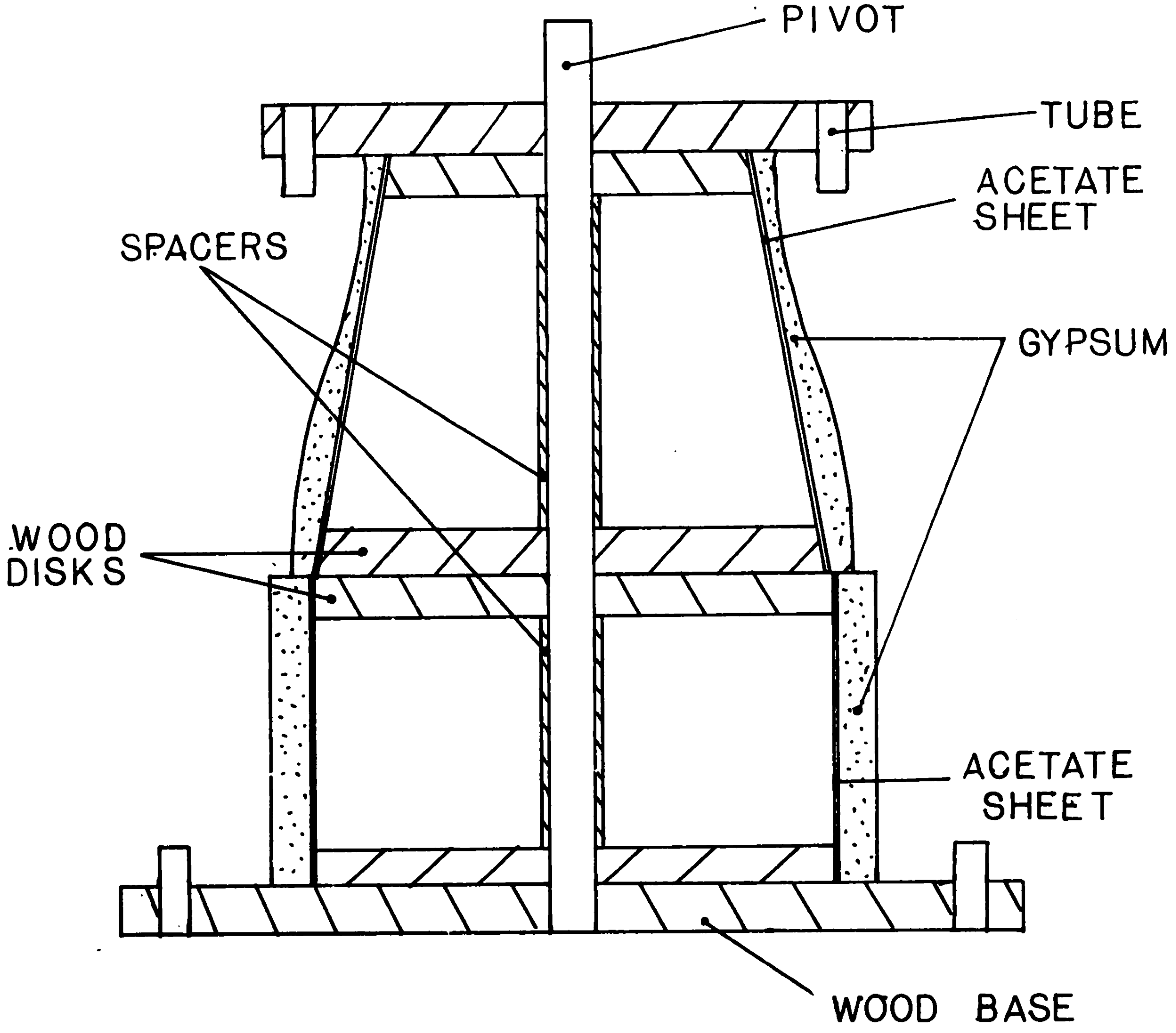

FIG. 27: Molding set-up for main housing manufacturing

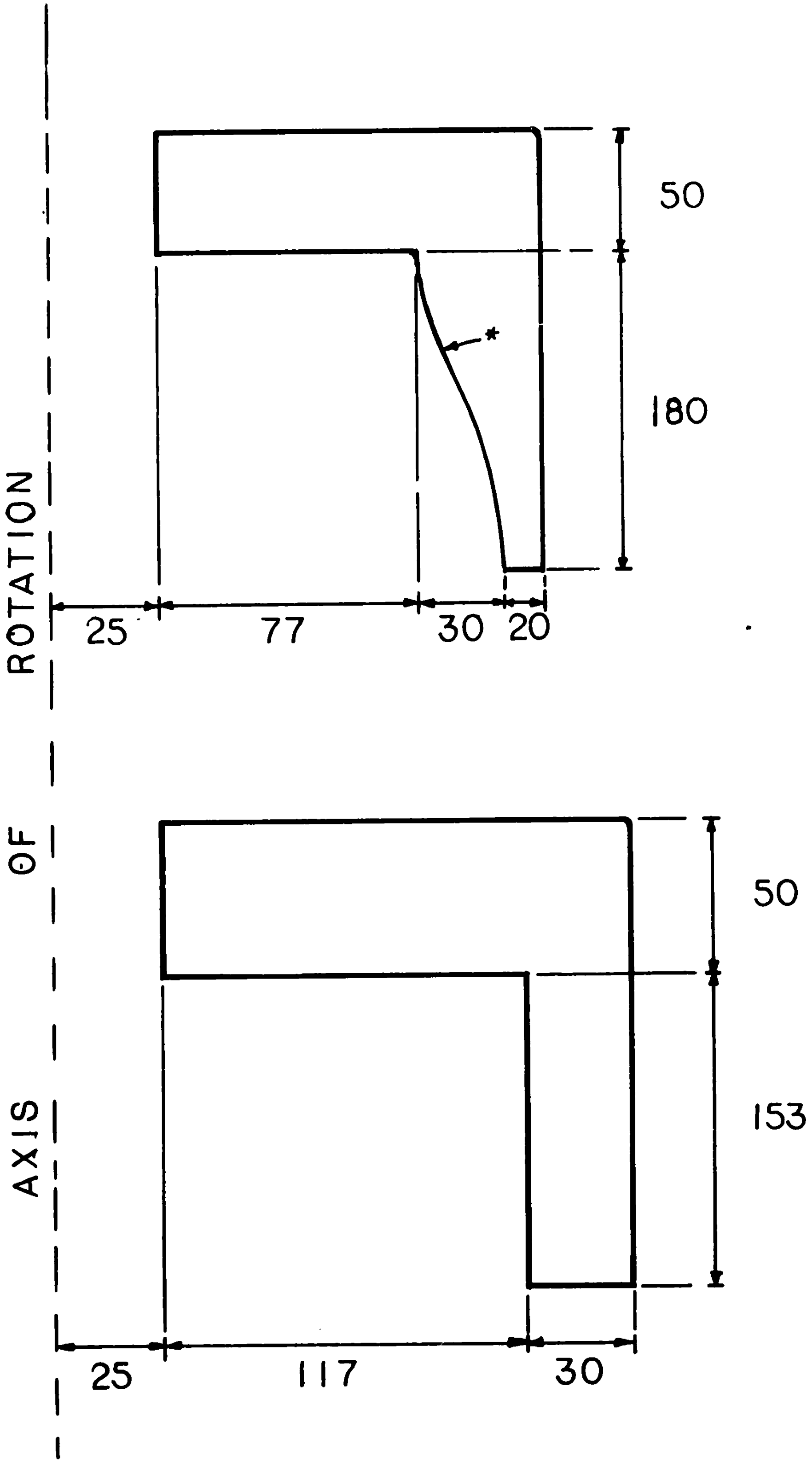

*SEE FIG. 26

FIG. 28: Templates for main-housing-mold manufacturing

top and bottom plywood pieces provided molding surfaces for the flanges. Eight 3/4-inch-O.D. tubes were mounted on each wood piece to provide holes on the flange for bolts. The wall of the housing was specified to be 3/4-inch thick and that of the flanges 1/2 inch. Plies of boating/tooling cloth and chopped-strand mat were laminated until the desired thickness was reached. After the laminates had set, the gypsum molds and the wooden bases were removed. The edges and the irregular spots on the housing surface were smoothed by a sander. Holes for the locking pins for the diffuser section were drilled. Pictures showing the molding set-up are given in FIG. 29-30. The completed housing is shown in FIG. 31.

3.4.2 The drain chute

The set-up for the molding of the drain chute is shown in FIG. 32. Two pieces of wood cut into the illustrated configuration were attached to a cylindrical mold section made with gypsum. Again, alignment was provided by the pivot tube. In addition, two rectangular pieces of wood were attached to the sides joining the end pieces to complete the set-up configuration. Both the wall and flanges were specified to be 1/2 inch thick.

After the set-up was completed and waxed, plies of fiberglass were laminated till the desired thickness was reached. The gypsum molds and the wood pieces were removed upon the setting of the laminates. The edges and the rough spots were trimmed. The complete chute is shown in FIG. 33.

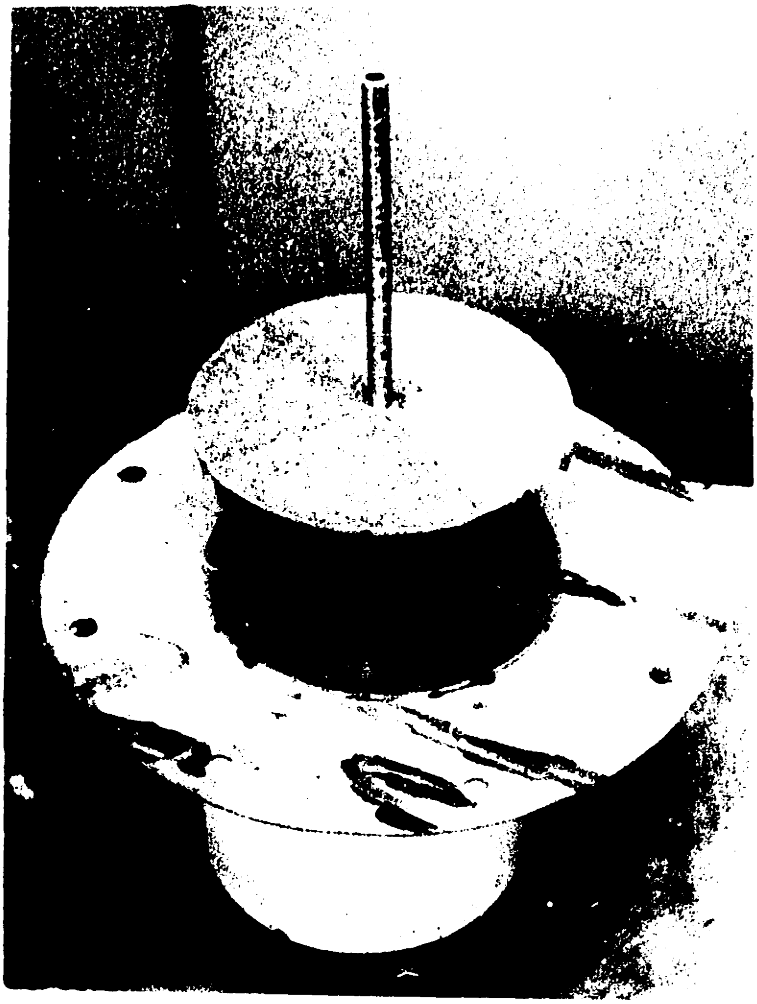

FIG. 29: Upper core of main housing molding set-up

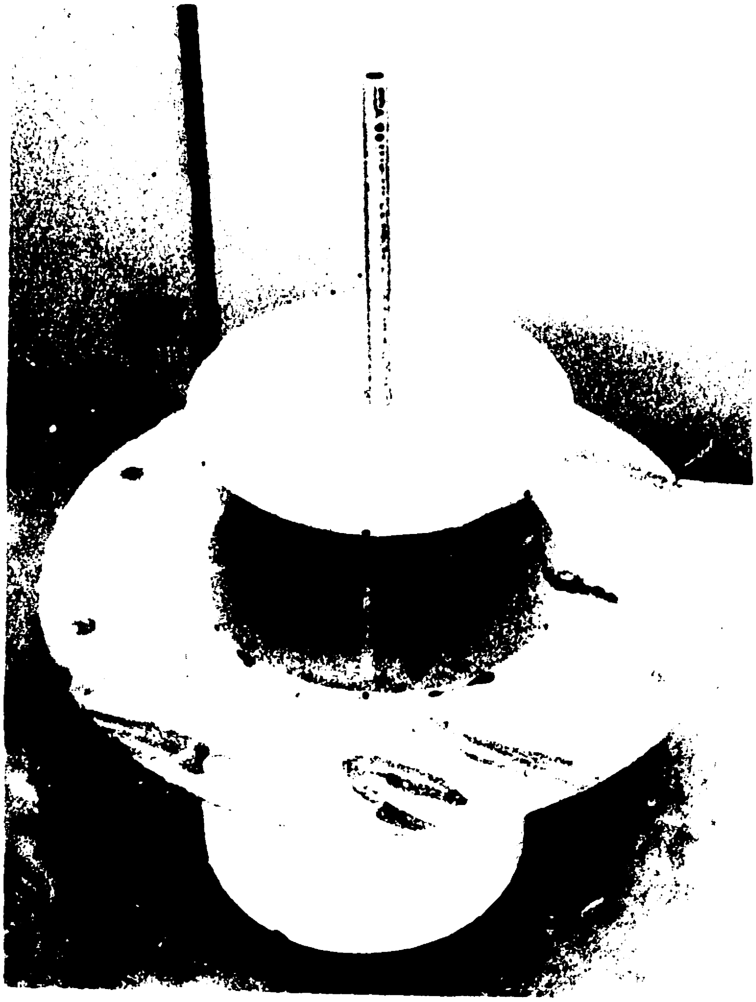

FIG. 29: Upper core of main housing molding set-up

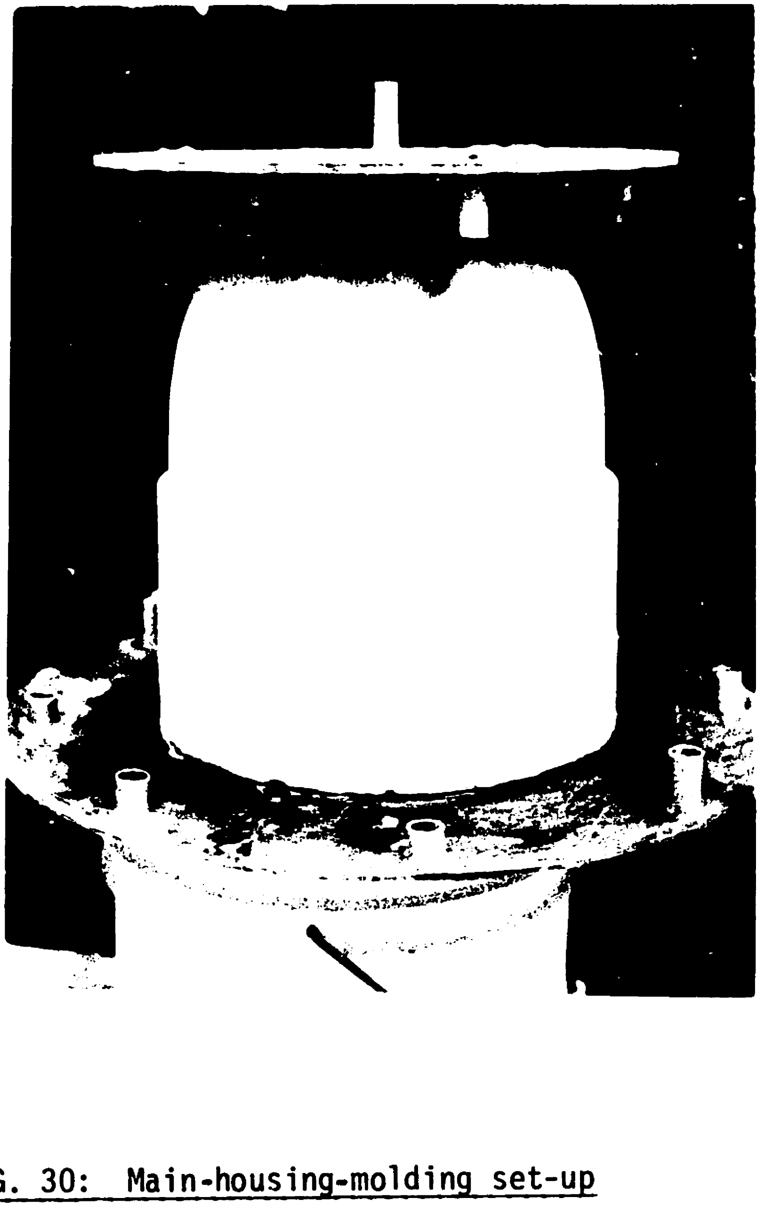

FIG. 30: Main-housing-molding set-up

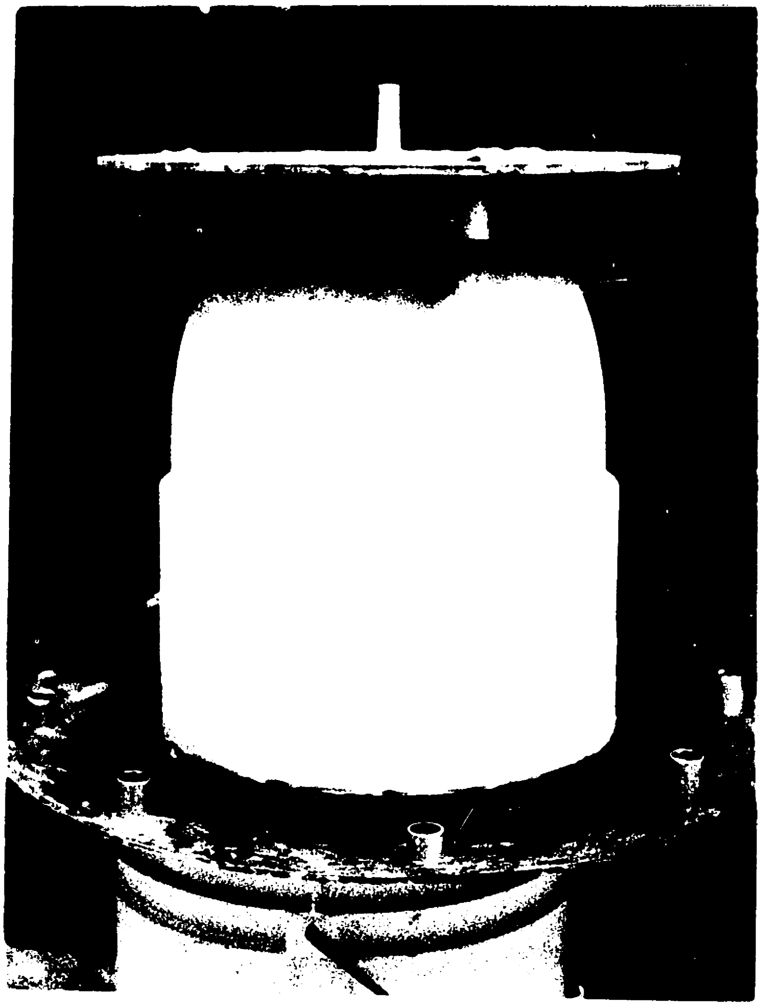

FIG. 30: Main-housing-molding set-up

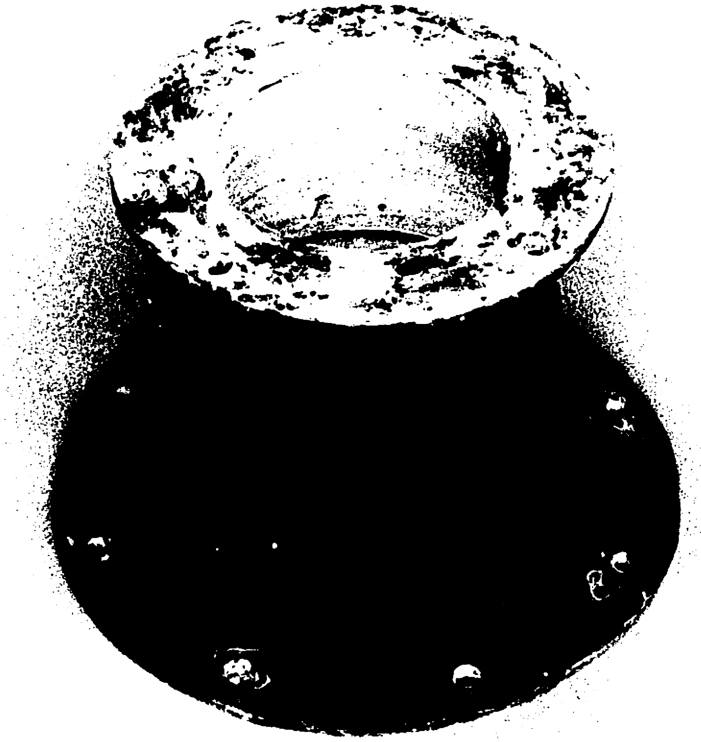

FIG. 31: Completed main housing

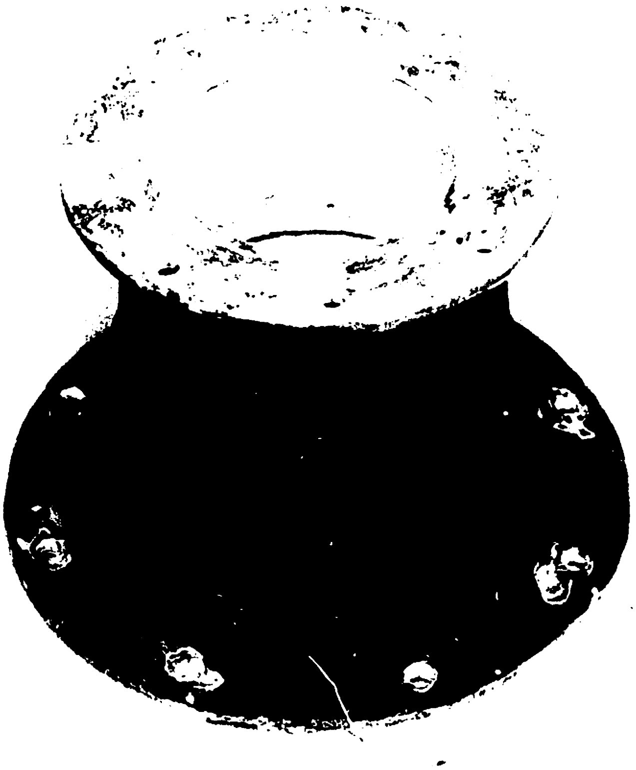

FIG. 31: Completed main housing

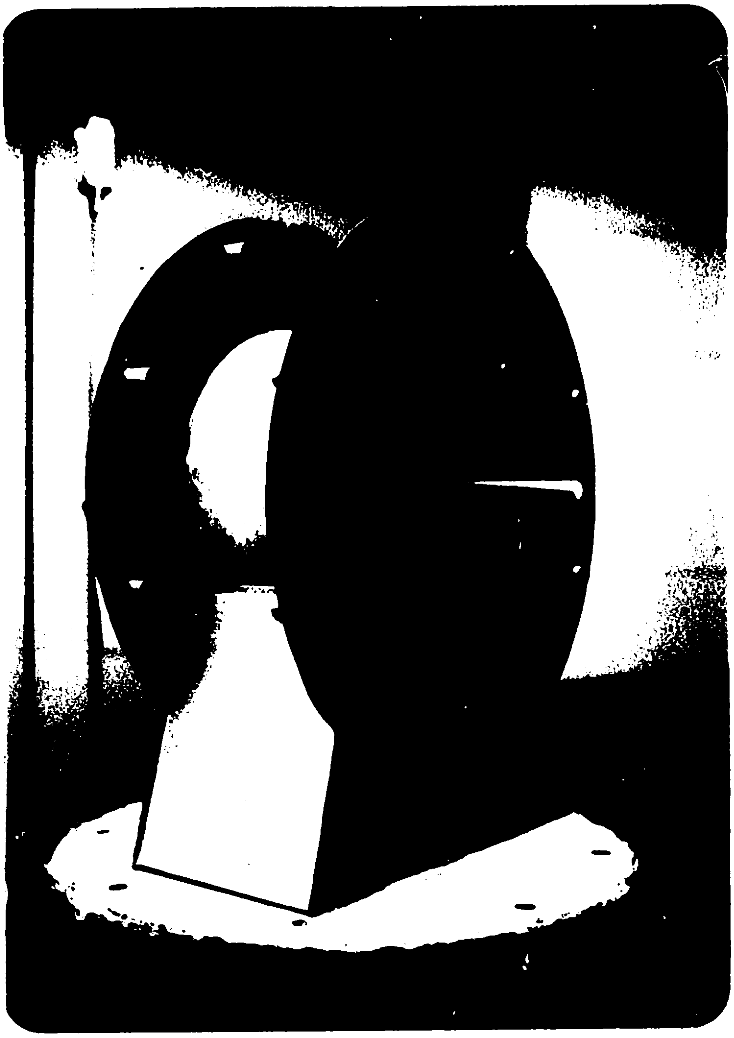

FIG. 32: Drain-chute manufacturing set-up

INTENTIONAL DUPLICATE EXPOSURE

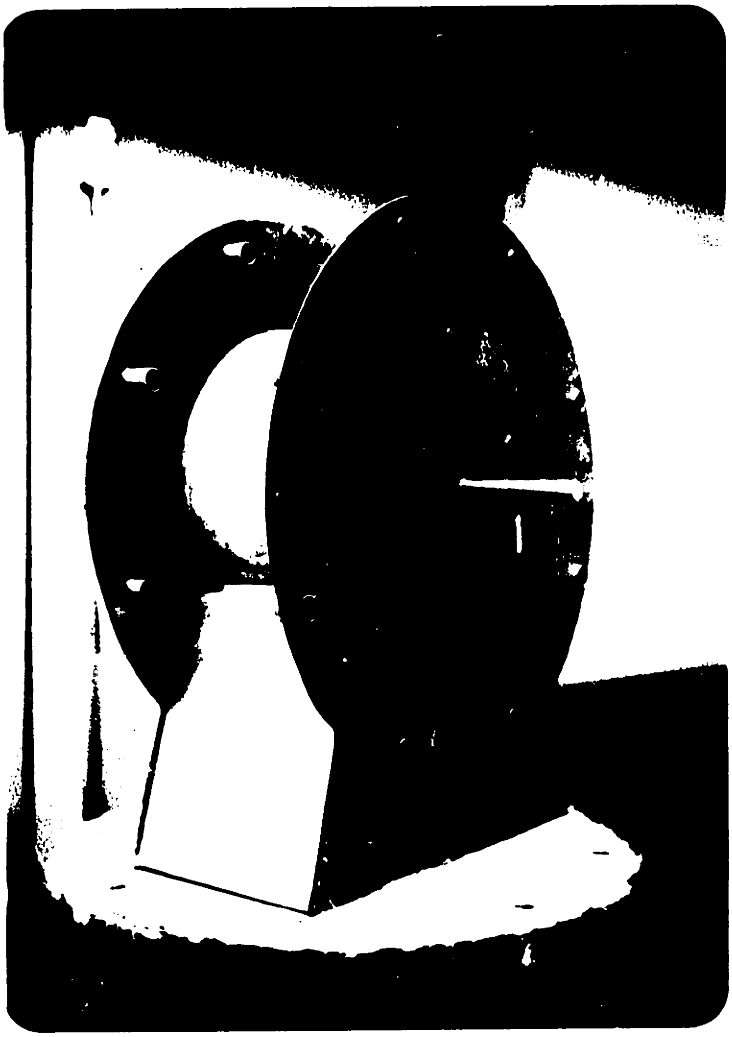

FIG. 32: Drain-chute manufacturing set-up

FIG. 33: Completed drain-chute

FIG. 33: Completed drain-chute

3.5 Miscellaneous components

Other components required in the completion of the turbine include : the output shaft (AF 322, TABLE 1), the flange bearing housing together with the bearing and seal (AF 323), the end plate (MD 8), the disk for torque transmission (AF 321), the filter (MD 2), and the stainless-steel plate for the thrust-bearing (AF 316B, p.111 in [1]).

The shaft, the flange bearing housing and the thrust-bearing plate were machined as specified in [1]. The configurations for the end plate and the modified disk are given in FIG. 34 and 35, respectively. They were accordingly manufactured. The filter is shown in FIG. 36. It was formed by attaching four layers of fine wire onto a circular plastic ring. The pieces of wire were held in place by screws. After all the parts had been completed, the turbine was ready for assembly.

3.6 Turbine assembly

First, the stator blades and the diffuser blades were mounted on the stator and diffuser hubs, respectively, together with the corresponding blade-mounts. The blade protrusions on these sections were trimmed on a lathe. The rotor section was

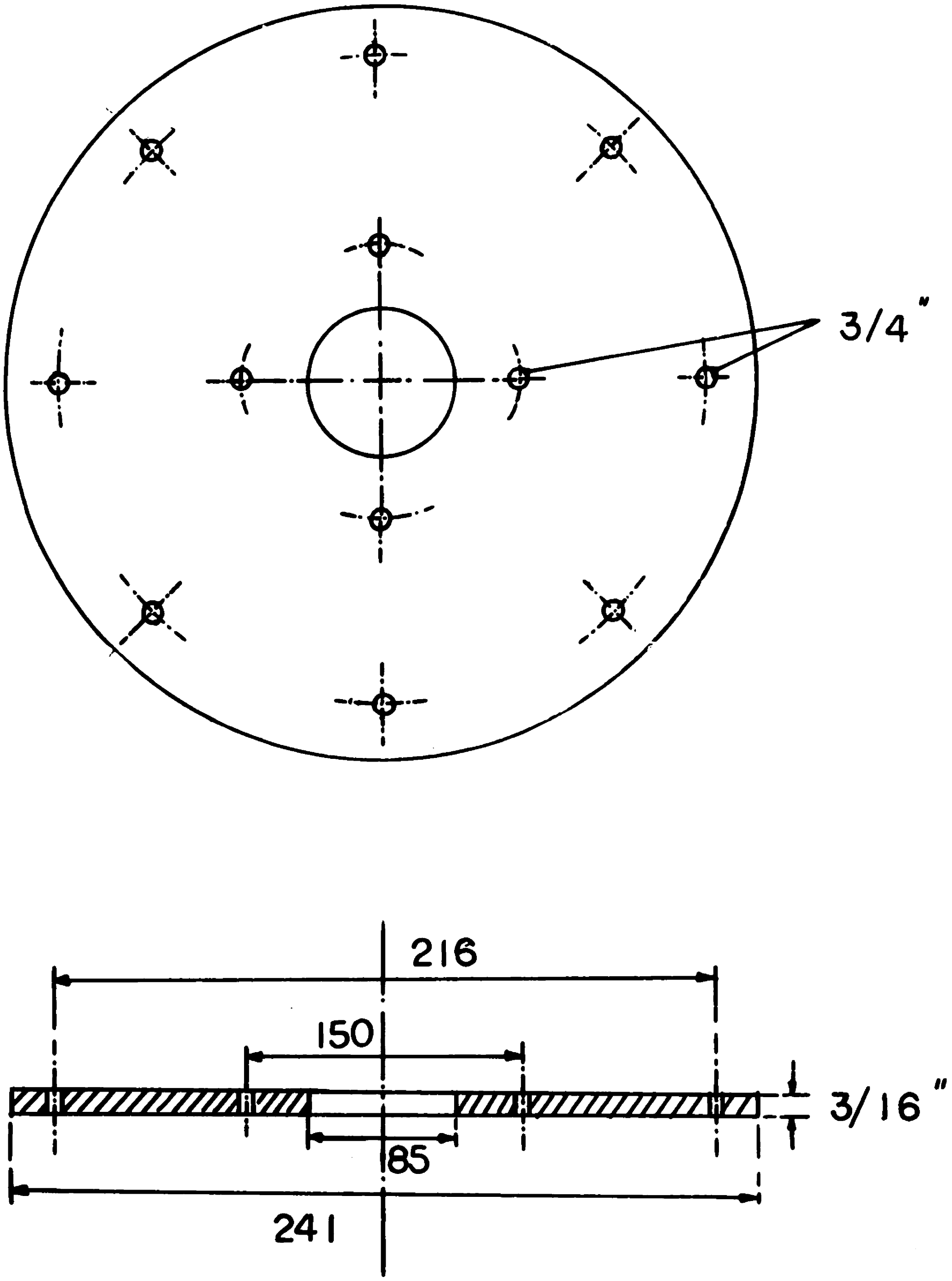

FIG. 34: End plate

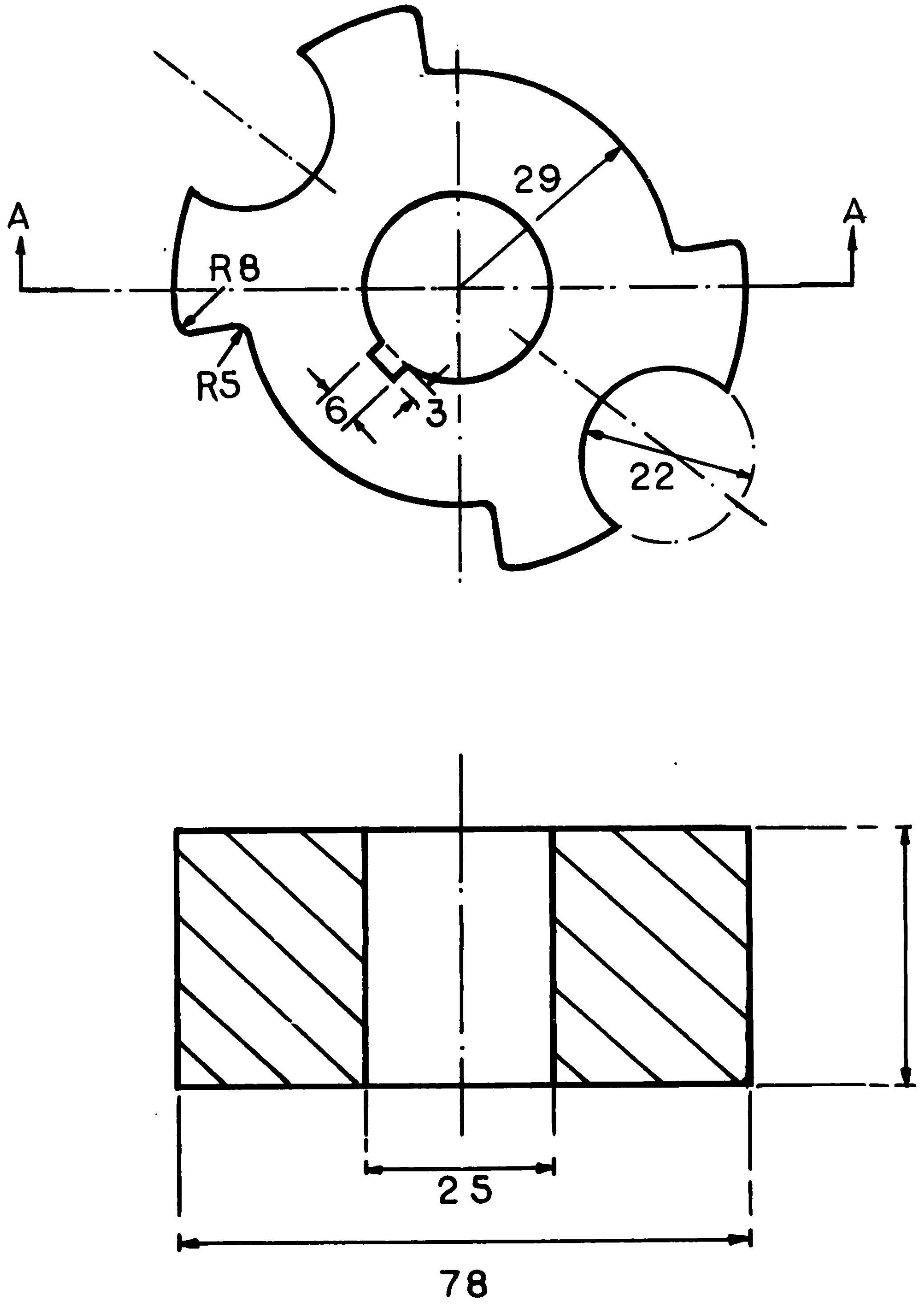

SEC. A-A

FIG. 35: Modified disk configuration

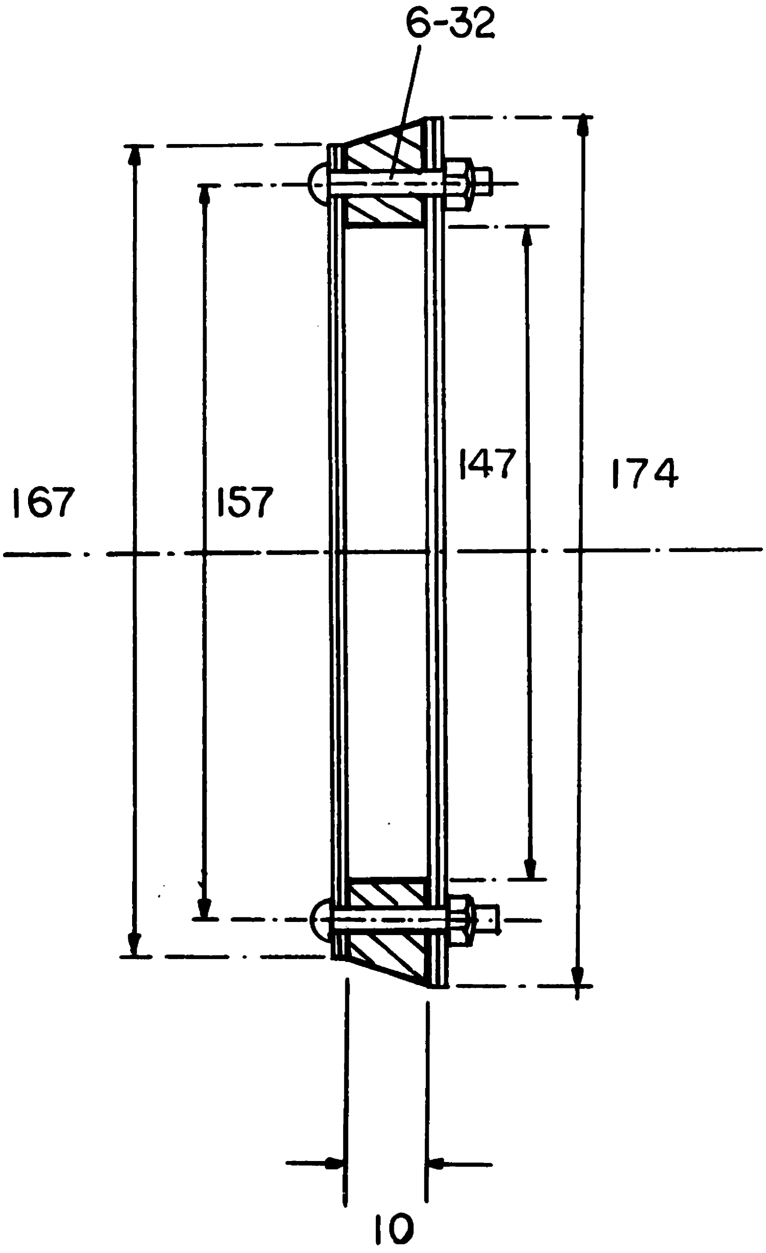

FIG. 36: Filter

also turned on a lathe to obtain the desired tip clearance.In order to accommodate a slight misalignment of the rotor bearings, the tip clearance was increased from 1 mm to 1.5 mm.

Holes one-inch deep into the diffuser blades were drilled in the diffuser section for the accommodation of the locking pins. A 3/8 inch ID tube was connected to the passage for the thrust-relief water supply at the back of the diffuser hub. The stainless-steel sheet forming the thrust-bearing surface on the rotor was attached to the latter with epoxy. In the front, the filter was fitted inside the core of the nose and held in place with resin.The nose was attached to the front end of the stator. The assembled nose, stator, rotor and diffuser sections are shown in FIG.37-40. They were fitted inside the main housing in the provided space. The stator was fixed permanently to the housing with resin while the diffuser was held in place by pins; the rotor was free to turn between the two. After the insertion of all these components, the drain chute was bolted onto the back of the main housing.

The shaft bearing and the seal were then fitted inside the bearing housing ; the whole assembly was subesequently bolted onto the stainless-steel end plate. The shaft was then mounted on the bearing while the disk for torque transmission was mounted at the front end with a key. Finally, the end-plate-

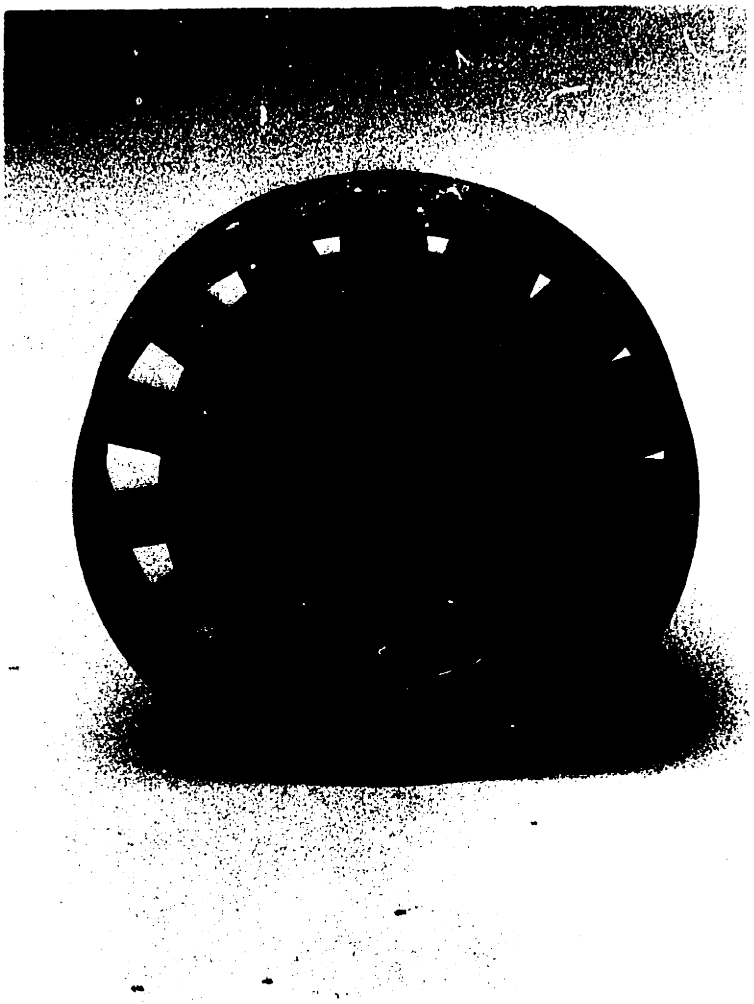

FIG. 37: Completed stator section

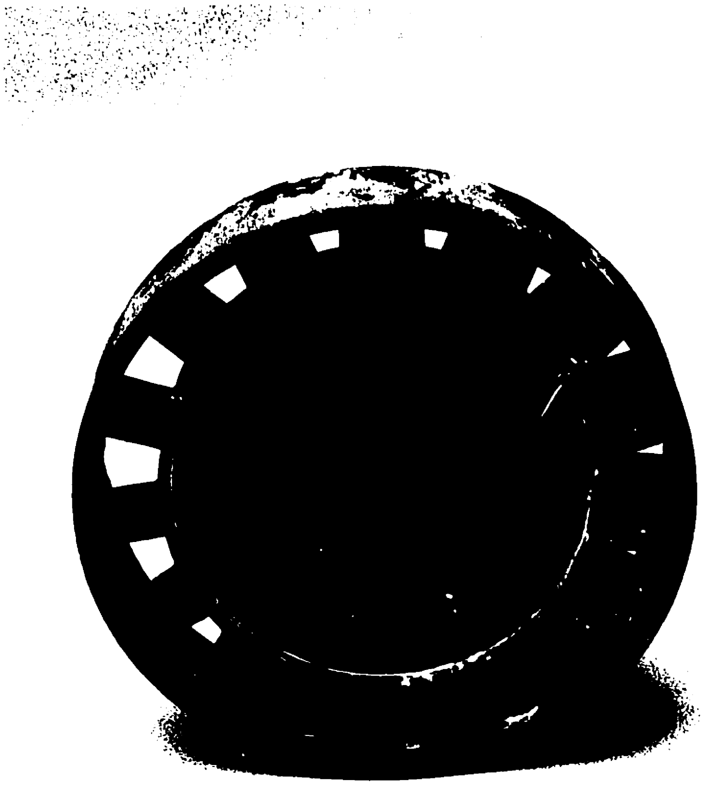

FIG. 37: Completed stator section

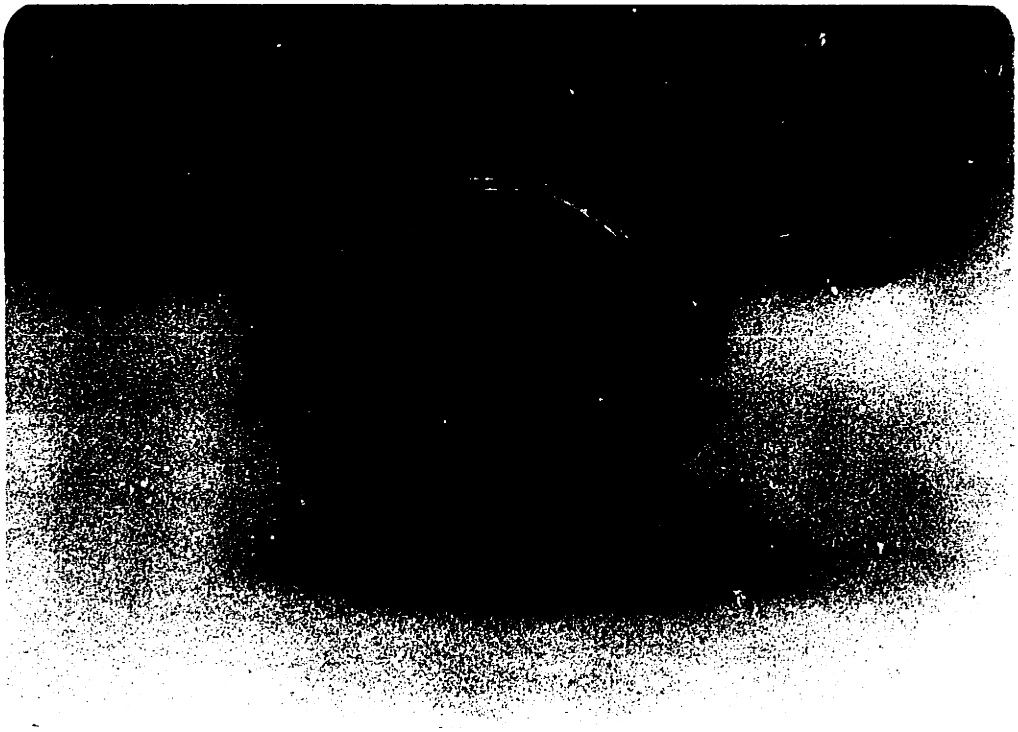

FIG. 38: Completed rotor section

FIG. 38: Completed rotor section

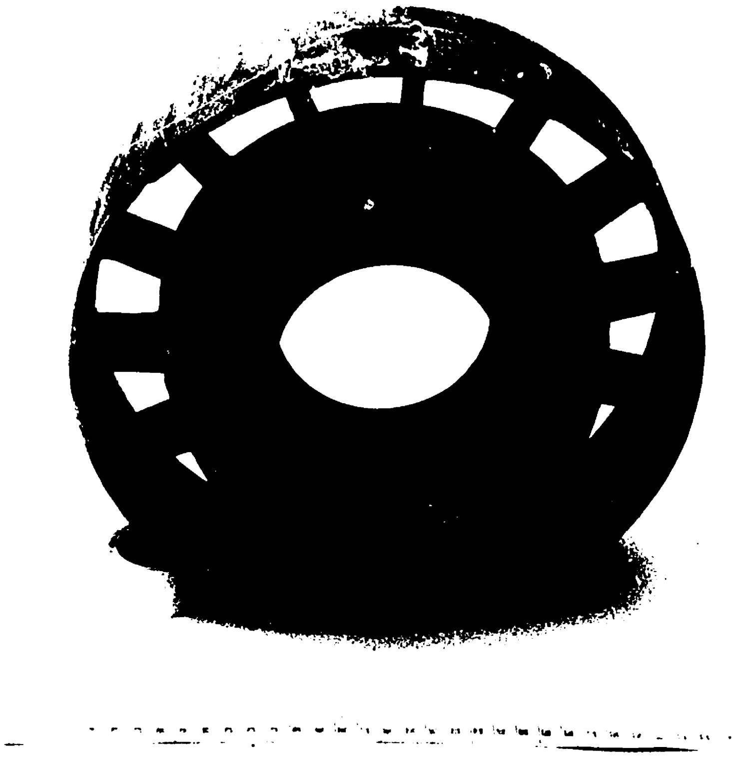

FIG. 39 Completed diffuser section

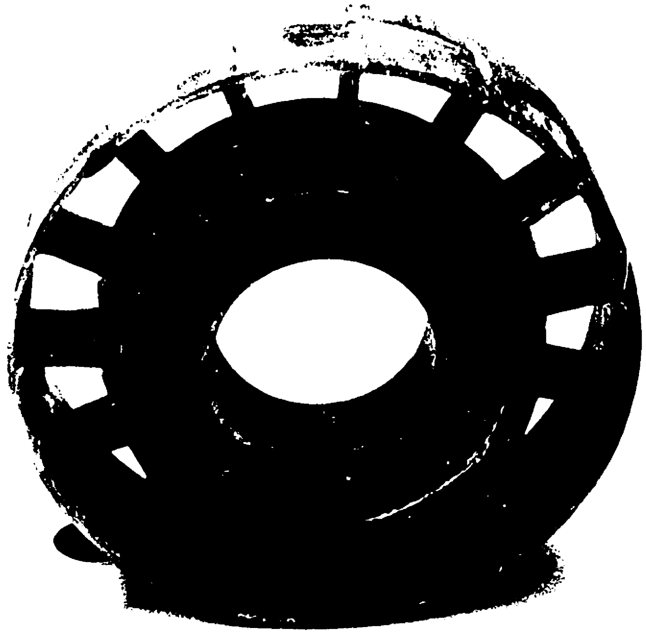

FIG. 39 Completed diffuser section

FIG. 40: Finished stator,rotor and diffuser sections

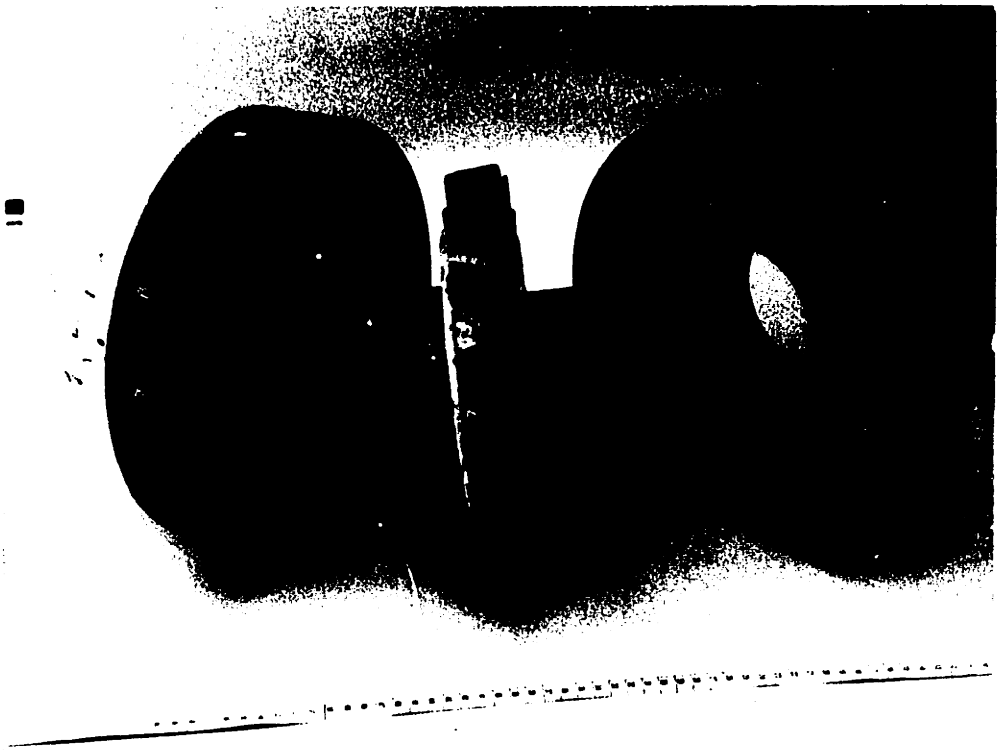

FIG. 40: Finished stator,rotor and diffuser sections

and -flange bearing assembly was bolted onto the back of the drain chute. Alignment was checked by turning the shaft continously during the fitting process. Sealing of contact surfaces of the flanges as well as filling of gaps were provided by rubber cement in all cases. The assembled turbine is shown in FIG. 41.

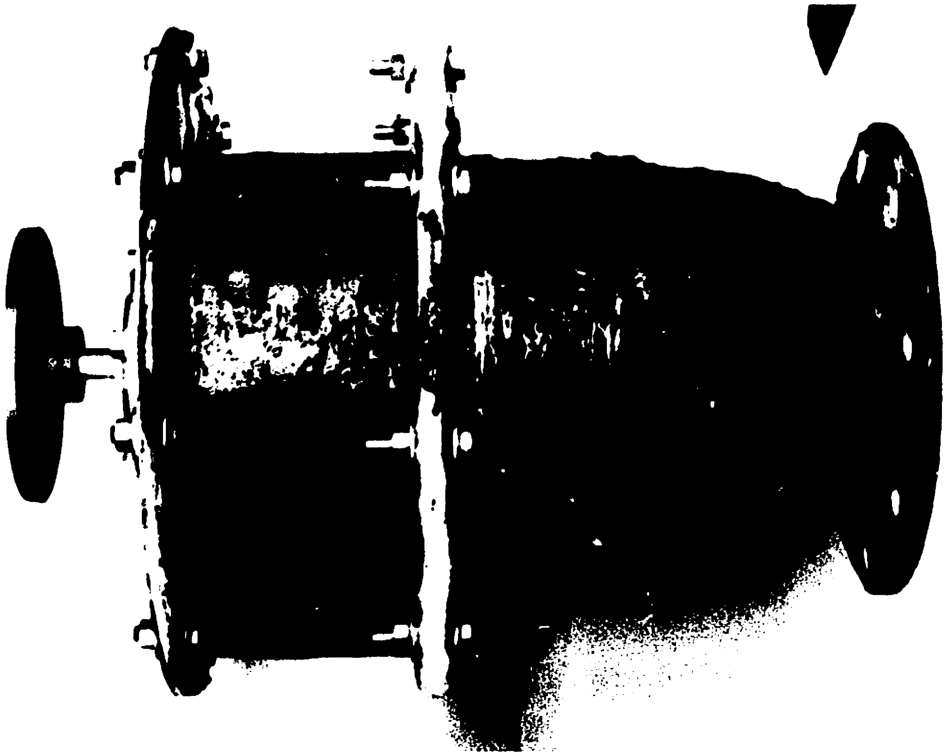

FIG. 41: Assembled turbine with disk fitted to the output shaft for testing

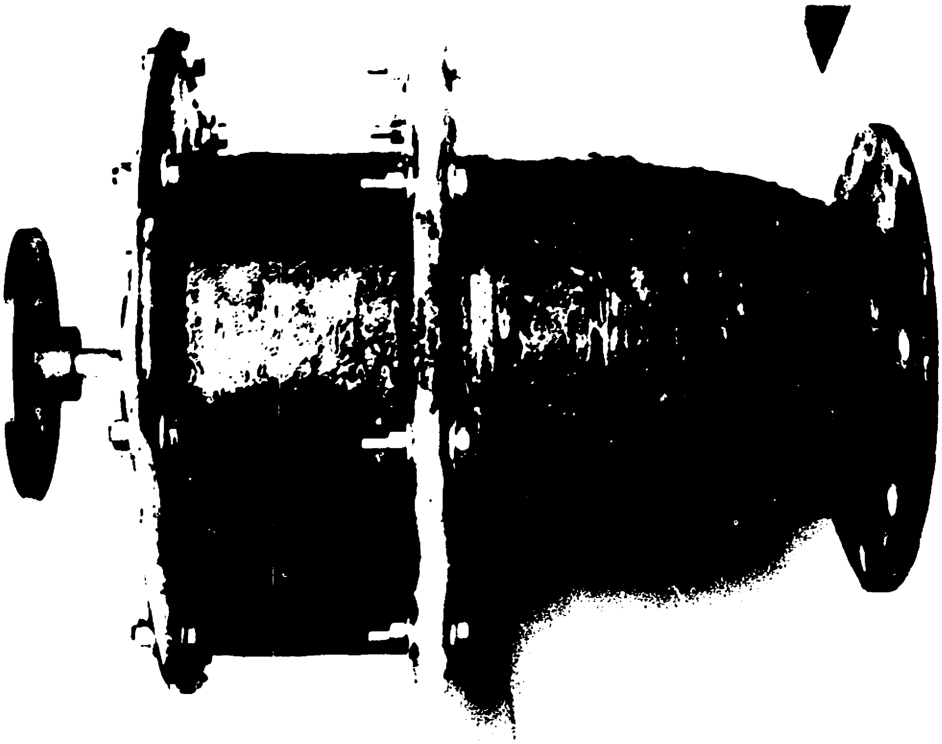

FIG. 41: Assembled turbine with disk fitted to the output shaft for testing

CHAPTER 4

TESTING

4.1 Summary

The turbine was tested with the set-up described in the next section. The mechanical power output was found by measuring the torque and rotational speed. The input parameters were the stagnation pressure measured at the inlet of the turbine and the volume flow rate measured in an upstream pipe section. The characteristics of the turbine were then obtained from data reduction. Owing to the system dynamics of the pump-turbine circuit, an input pressure head of only one-eighth of the designed value was available. All test data were taken at or below this value.

4.2 Testing set-up

The testing set-up [2] is illustrated in Fig.42 . The turbine was placed on top of a water tank. The flow was supplied by a pump with the flow rate controlled by an inlet valve on the tank. The flow then passed through a pipe section with flow-straighteners. These straighteners were formed by stacking a bunch of aluminum tubes together. They served to take the swirl out of the flow which would contribute error

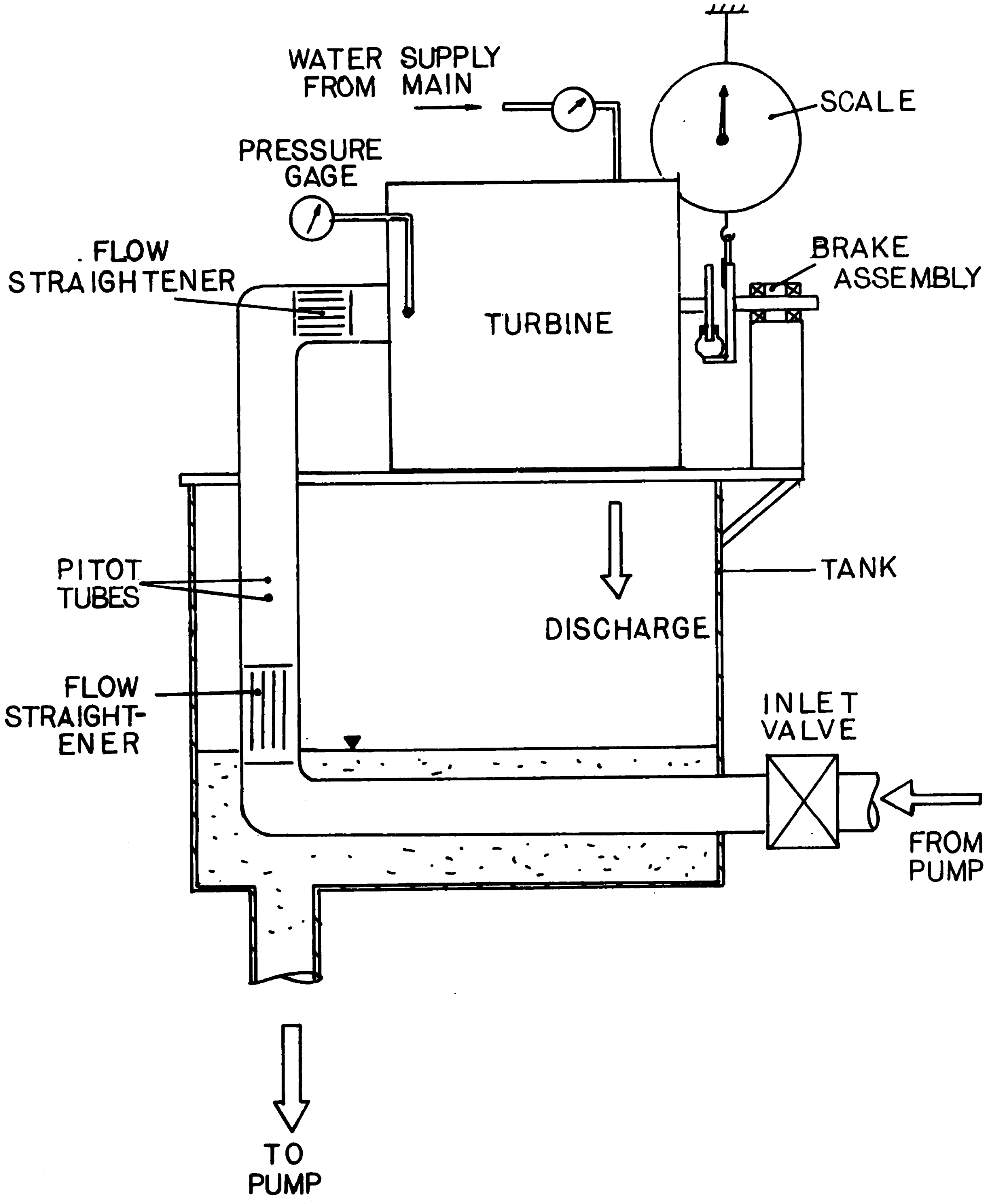

FIG. 42: Testing set-up

to the flow measurements. The flow rate was measured by pitot tubes because of their ease in manufacture and installation. The stagnation pressure at the turbine inlet was measured by a pressure gage. After passing through the turbine stage, the flow discharged down the drain-chute into the tank and eventually returned to the pump. The thrust-bearing-relief-pressure was supplied from a water main via 3/8-in. tubing. A brake assembly was also set up on the platform as shown in FIG. 43. The application of the brake converted the output torque to a force which was read off a scale hinged to the end of the brake-assembly moment arm. The brake-arm pivot had to be concentric with the turbine output shaft to eliminate the calculation of the radial components of the frictional forces between the pads and the disk. A small reflective piece of metal was attached to the rim of the disk so that the rotational speed could easily be determined with a strobe light.

4.3 The turbine characteristics

The torque-speed characteristic is given in FIG. 44. The characteristic was found by operating the turbine at maximum pressure and flow rate available while the torque was varied by changing the clamping force. The corresponding speed was measured.

Other characteristics were found by measuring the output torque and rotational speed at different pressure head and

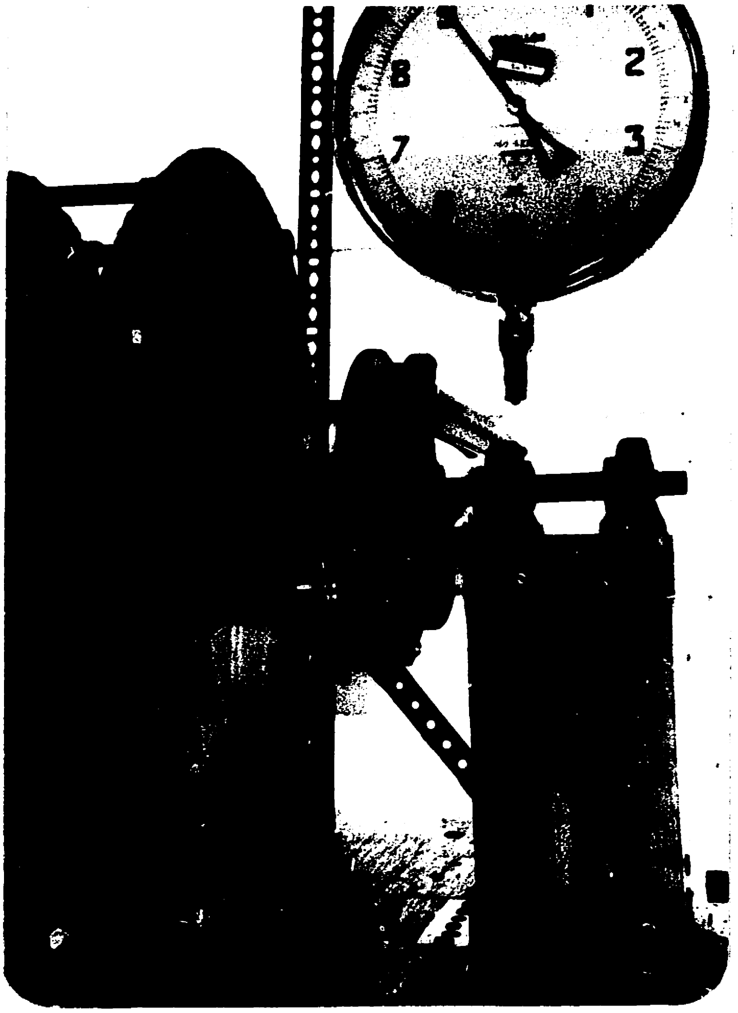

FIG. 43: Brake assembly

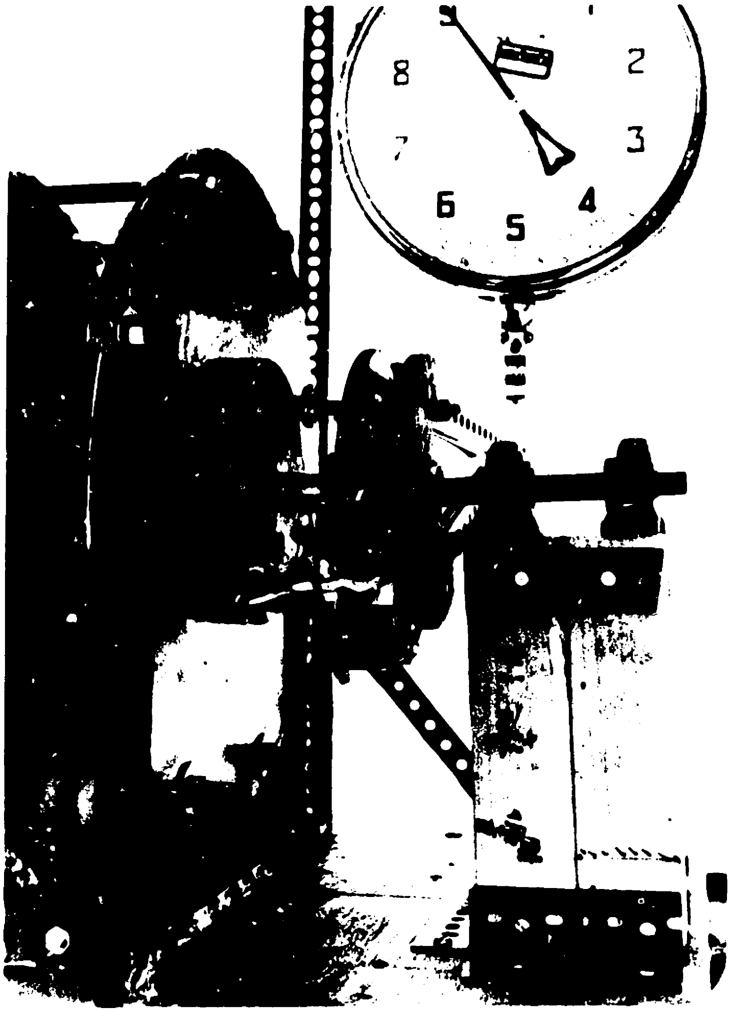

FIG. 43: Brake assembly

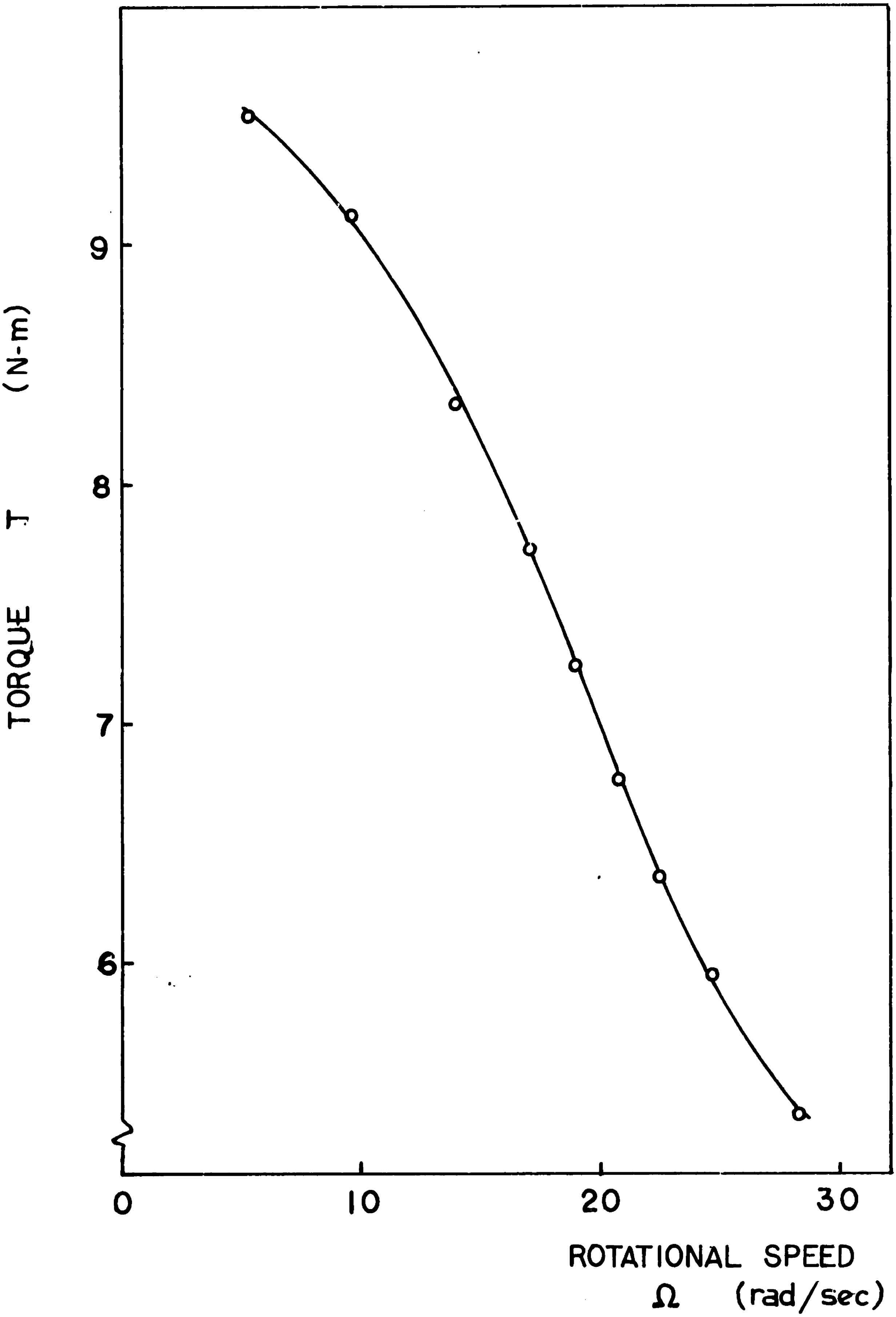

FIG. 44: Torque-speed characteristic

fow rate.

Let $T \equiv$ output torque [N m]

$\Omega \equiv$ rotational speed [rad/s]

$U \equiv$ peripherial speed at mean diameter [m/s]

$C_X \equiv$ axial velocity of flow [m/s]

$\Delta P \equiv$ pressure difference between inlet and outlet of turbine [N/m^2]

$Q \equiv$ volume flow rate [m^3/s]

$\rho \equiv$ density of water [kg/m^3]

$\eta_m \equiv$ mechanical efficiency

The mass flow rate can be calculated from

$$\dot{m} = \rho Q$$

The specific work is defined as

$$\Delta ho \equiv \frac{\text{Actual power output}}{\text{mass flow rate}}$$

$$\equiv \frac{T\Omega_{(\text{measured})}}{\rho Q} \left(\frac{1}{\eta_m}\right)$$

The isentropic work,which is the specific work obtained from a lossless machine,is defined as

$$\Delta ho_s \equiv \frac{\text{Power supplied}}{\text{mass flow rate}} = \frac{\Delta P\, Q}{\rho Q}$$

$$= (Po_{\text{inlet}} - Po_{\text{outlet}}) \frac{1}{\rho}$$

If the kinetic energy of the outflow is neglected, and the outlet pressure is taken as the atmospheric pressure, then

$$\Delta h_{o_s} = P_{\text{gage (inlet)}} / \rho$$

Several useful non-dimensional parameters are defined in the following.

Flow coefficient $\phi \equiv \frac{cx}{U}$

Head coefficient $\psi' \equiv \frac{g\Delta H_o}{U^2}$

Work coefficient $\psi \equiv \frac{\Delta ho}{U^2}$

Where g is the acceleration due to gravity and ΔHo is the head difference across the turbine, i.e.,

$$\Delta Ho = \frac{\Delta Po}{\rho}$$

The ψ-ϕ and ψ'-ϕ characteristics are shown in Fig. 45 and 46 respectively.

The total-to-static efficiency of the machine including mechanical losses can be defined as

$$\eta_{t-sm} = \frac{\Delta h_o}{\Delta h_{o_s}} \cdot \eta_m$$

A plot of η_{t-sm} versus ϕ^{-1} is given in Fig.47. References on these characteristics can be found in [3] and [4].

The effect of the application of thrust-relief-pressure is shown in Fig.48. It was found that higher level of power output can be achieved by the supply of a higher relief pressure; however, there also exists a limiting value for the increase in power. In addition, the plot does not show the advantage of having the relief pressure in reducing the wear of the bearings by extremely fine particles passing through the filter. All test

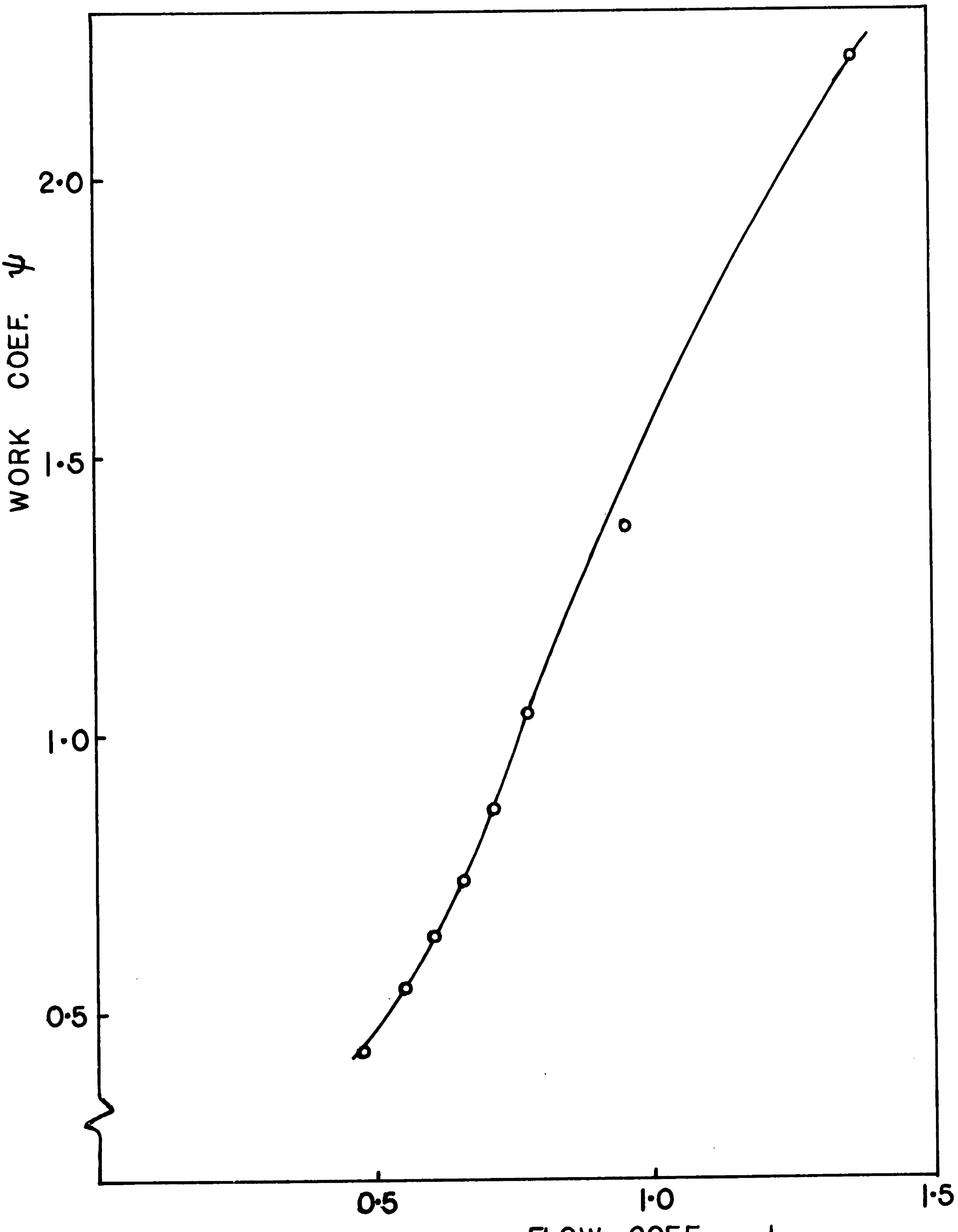
WORK COEF. ψ
2·0
1·5
1·0
0·5
0·5
1·0
1·5
FLOW COEF.

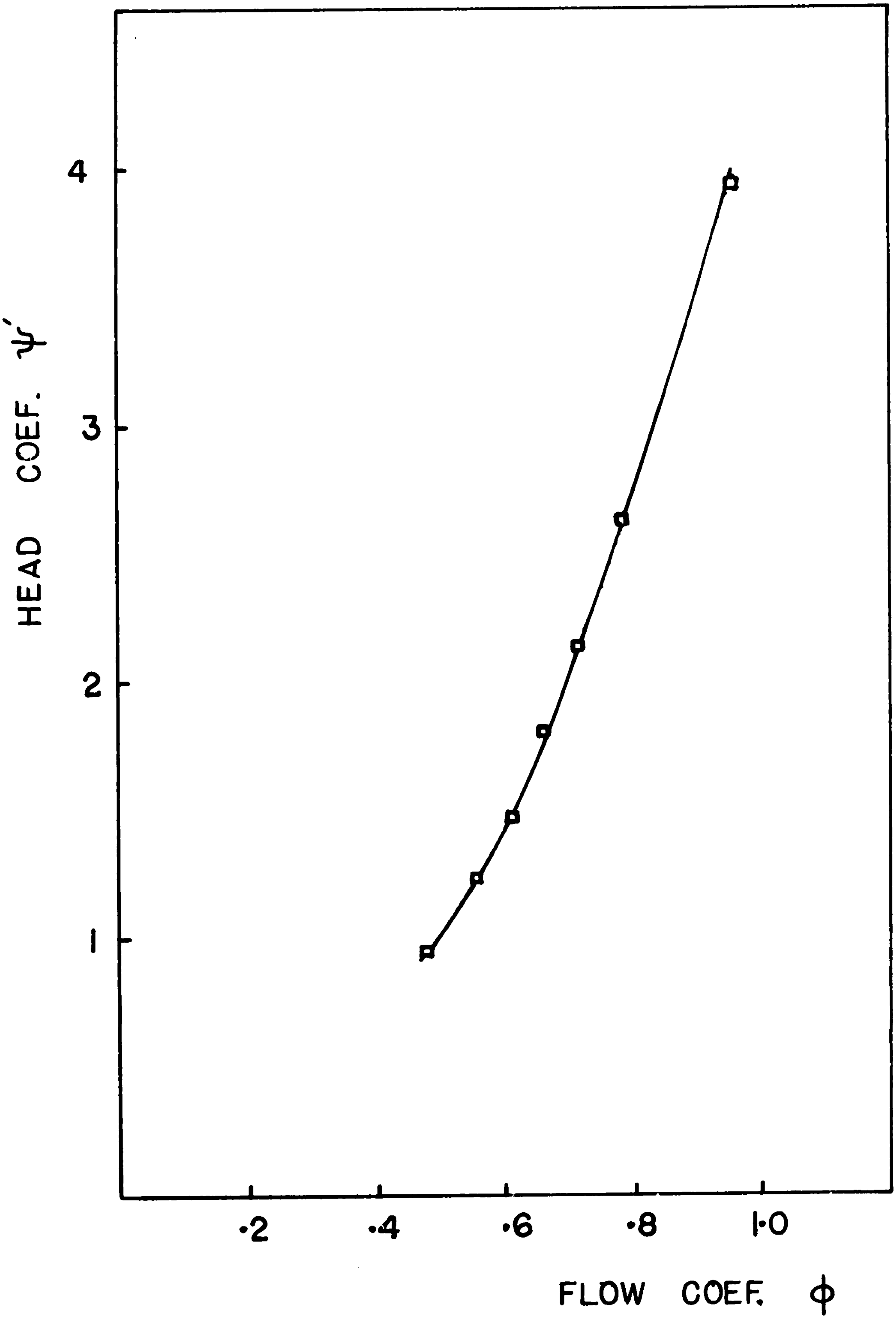

FIG. 46: ψ'-ϕ characteristic

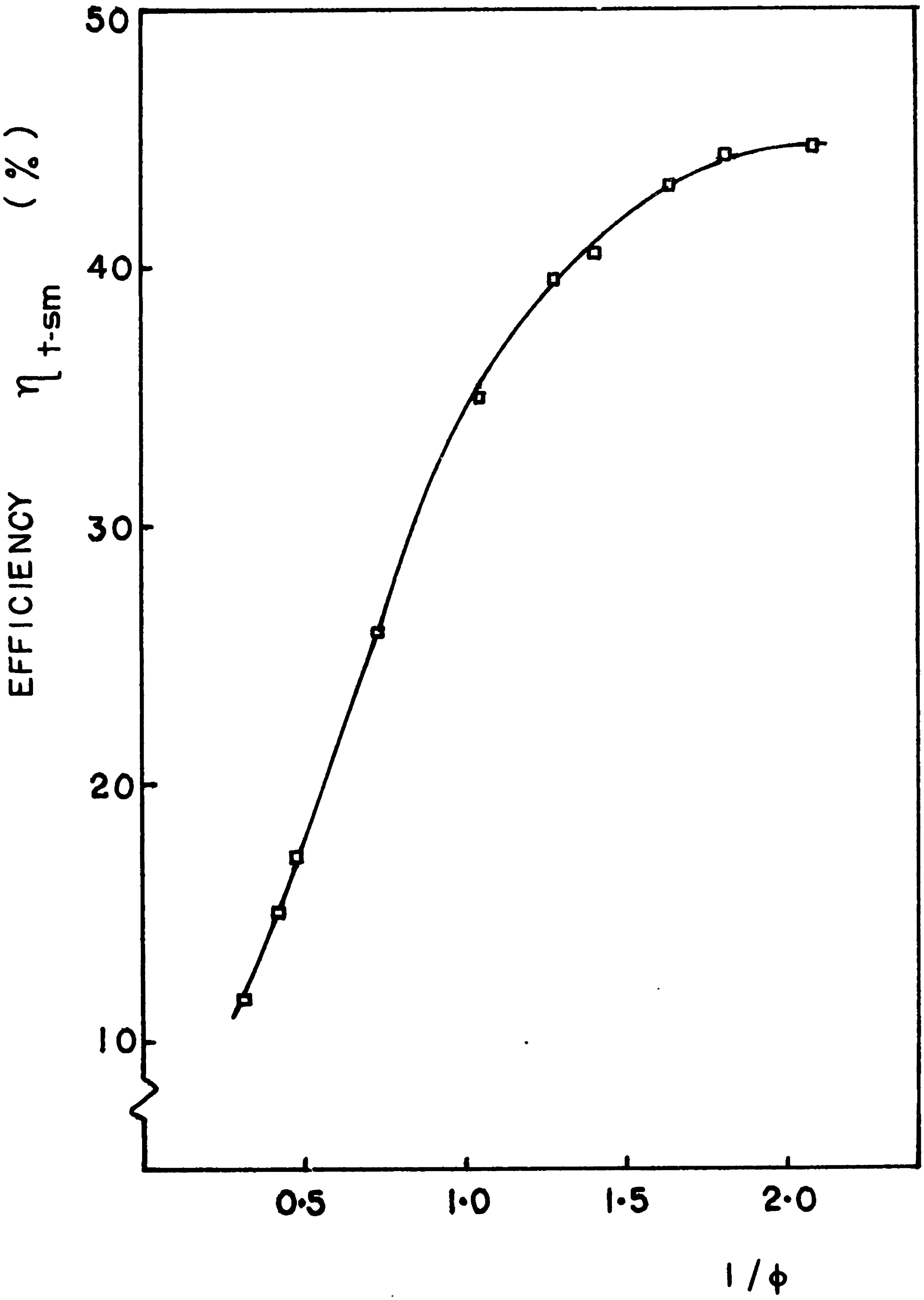

FIG. 47: Efficiency versus inverse of flow coefficient

data presented (except in Fig. 48) were taken at a relief pressure supply of 15 psi to prolong the life of the bearings.

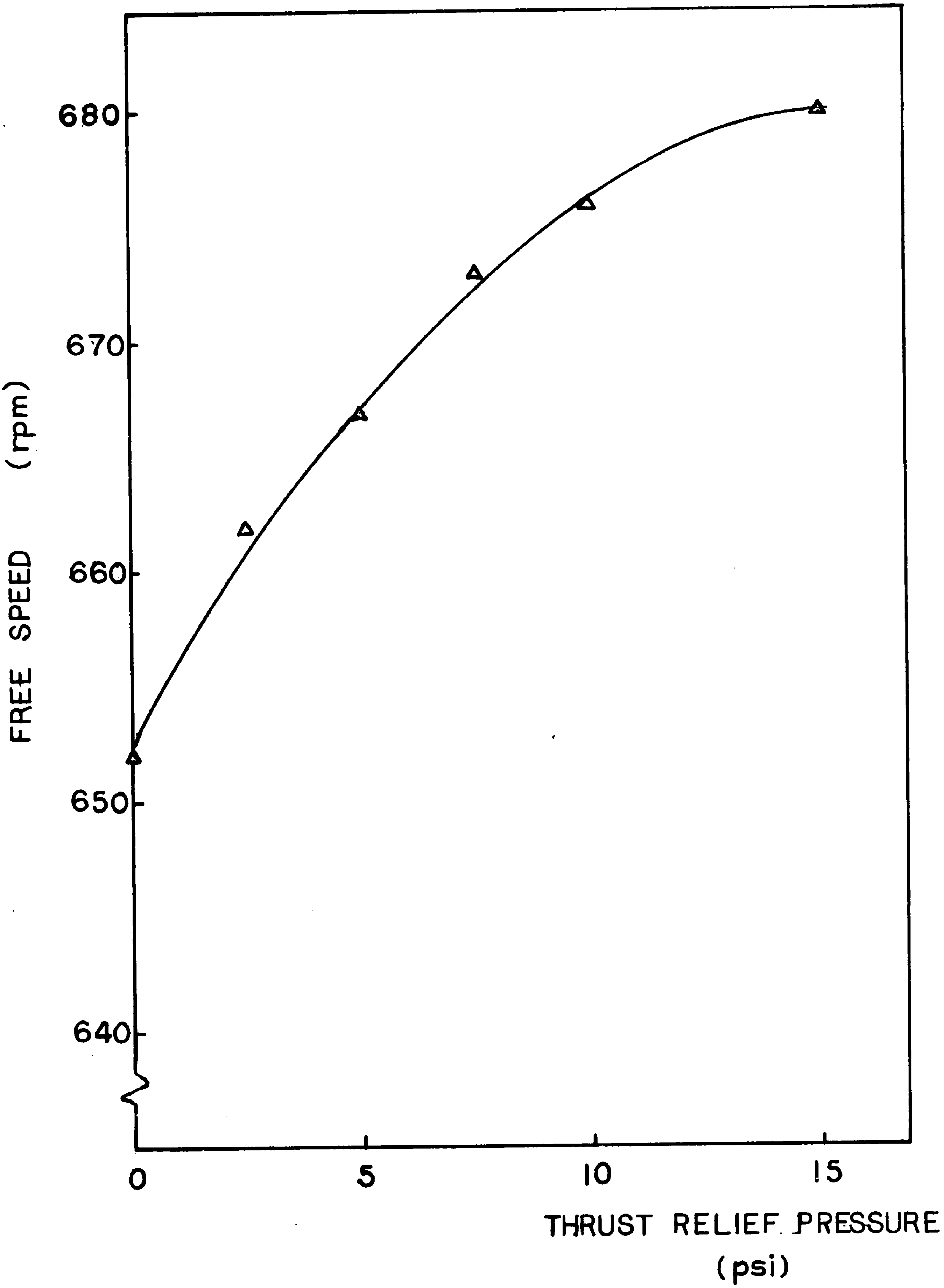

FIG. 48: Effect of thrust relief- pressure on free speed

CHAPTER 5

EVALUATION AND RECOMMENDATION

5.1 Summary

The performance of the turbine obtained from testing is used as the basis for evaluation. The evaluation approach is illustrated in FIG. 49. Based on the evaluation of the turbine design, the choice of manufacturing materials and the production techniques, recommendations are suggested. They are made with the goal of producing a reliable machine with good performance. The cost of materials for the turbine production is estimated; however, further study would be necessary to relate the overall production cost with the techniques and materials employed. Suggestions for full power testing are also given.

5.2 Performance

The power output level of the turbine was found to be lower than expected. This can be observed from the $\eta_{t-sm}-\phi^{-1}$ relation (FIG. 47) where the highest efficiency obtained is quite short of the theoretical value given in [1]. Suggestions of some of the possible causes are listed in the following.

(i) The presence of solid particles in the flow contributes high frictional losses.

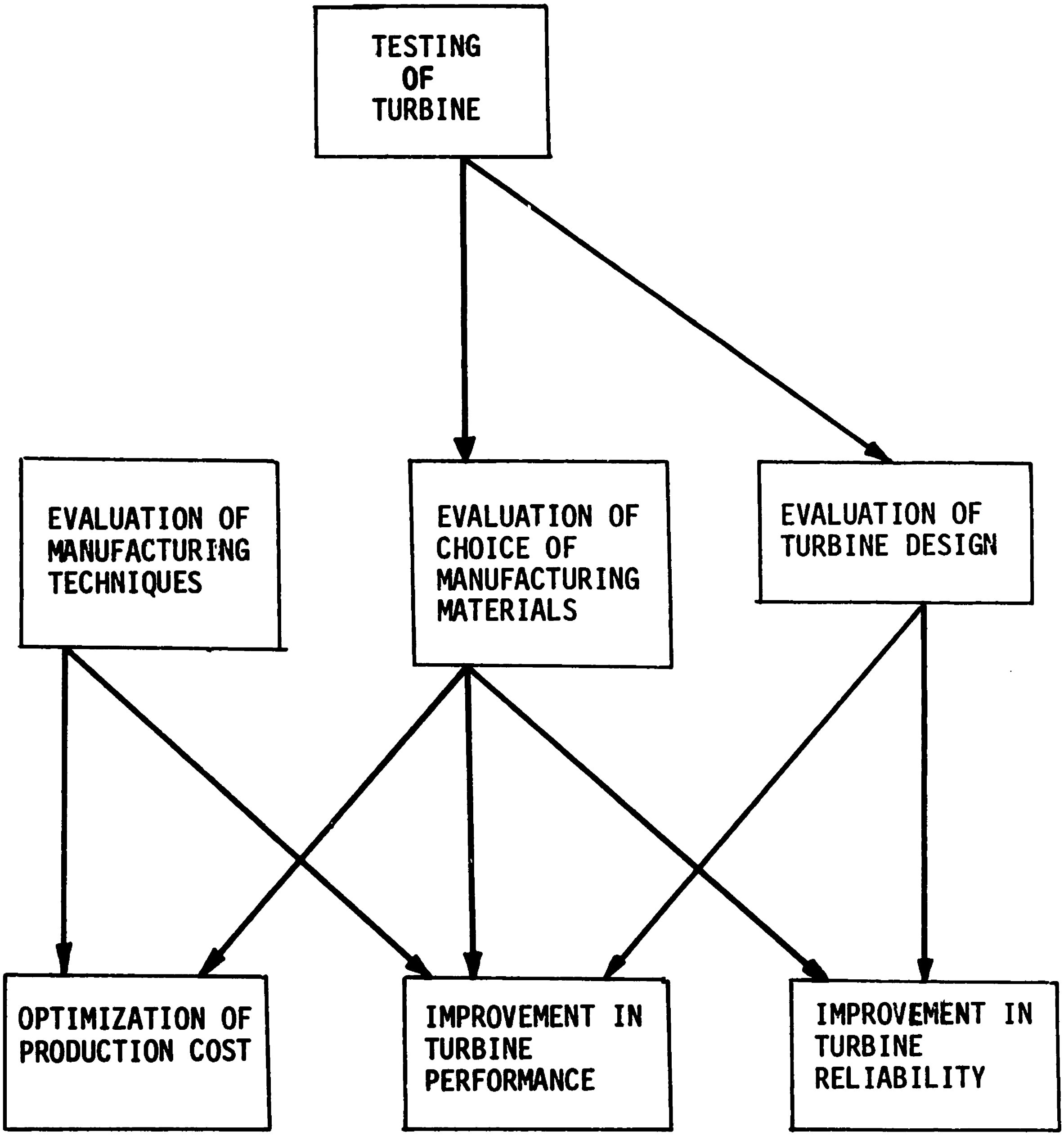

FIG. 49: Evaluation approach

(ii) The severe wearing of the bearings by solid particles in the flow introduces misalignment.

(iii) The increase in tip clearance of the rotor section raises the tip-clearance loss.

(iv) The inaccuracy introduced in the manufacture of various components may contribute additional losses.

Testing conducted at the available power level reveals no structural weakness in all the turbine components. However, further testing at full power is necessary to arrive at more realistic conclusions, especially for some of the crucial components such as the rotor blades.

5.3 Turbine design

The major weakness of the design of the turbine lies in its inability to filter solid particles. Even with the stainless-steel-on-Teflon thrust bearing, the frictional torque is extremely high. This problem is serious but practical. A finer filter inside the nose section would be impractical as the wires would probably be clogged and there would not be enough flow through the nose to give the bearings adequate lubrication. If the rotor blade configuration and the pressure difference (and hence the thrust) are to remain unchanged, the employment of different types of water-tight bearings would be necessary to improve the efficiency and extend the life of the machine. An alternative would be to have the filtering done by better devices upstream of the turbine.

The fixing of the diffuser section to the main housing by locking pins makes its removal rather easy. However, a small leakage problem exists at the pin slots which might intensify at higher pressures. In addition, the permanent attachment of the stator section to the housing is undesirable from the maintenance point of view. A more elegant way of fitting these sections inside the main housing is illustrated in FIG. 50. The stator and diffuser sections in the new design are held in place by four teeth. These sections can therefore slide out of the housing whenever the drain-chute is not in place.

Another modification suggestion is shown in FIG. 51. An outer grove is provided on each side of the flanges in the drain-chute. The end plate and the main housing can now be aligned easily when they are assembled with the chute.

A new design for the rotor-blade-mold is shown in FIG. 52. The new configuration would eliminate the trouble in

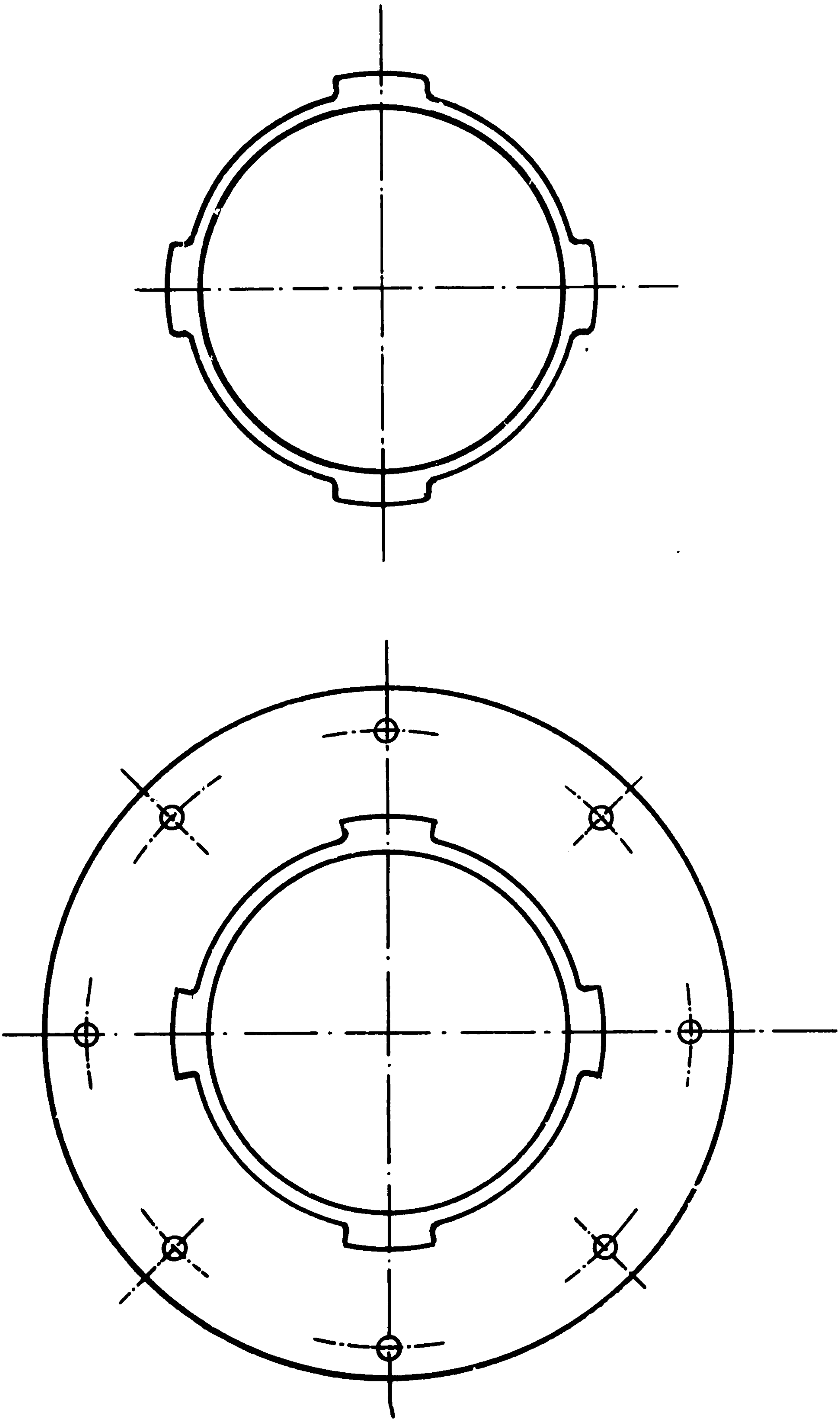

FIG. -9: Modified blade-mount and housing for

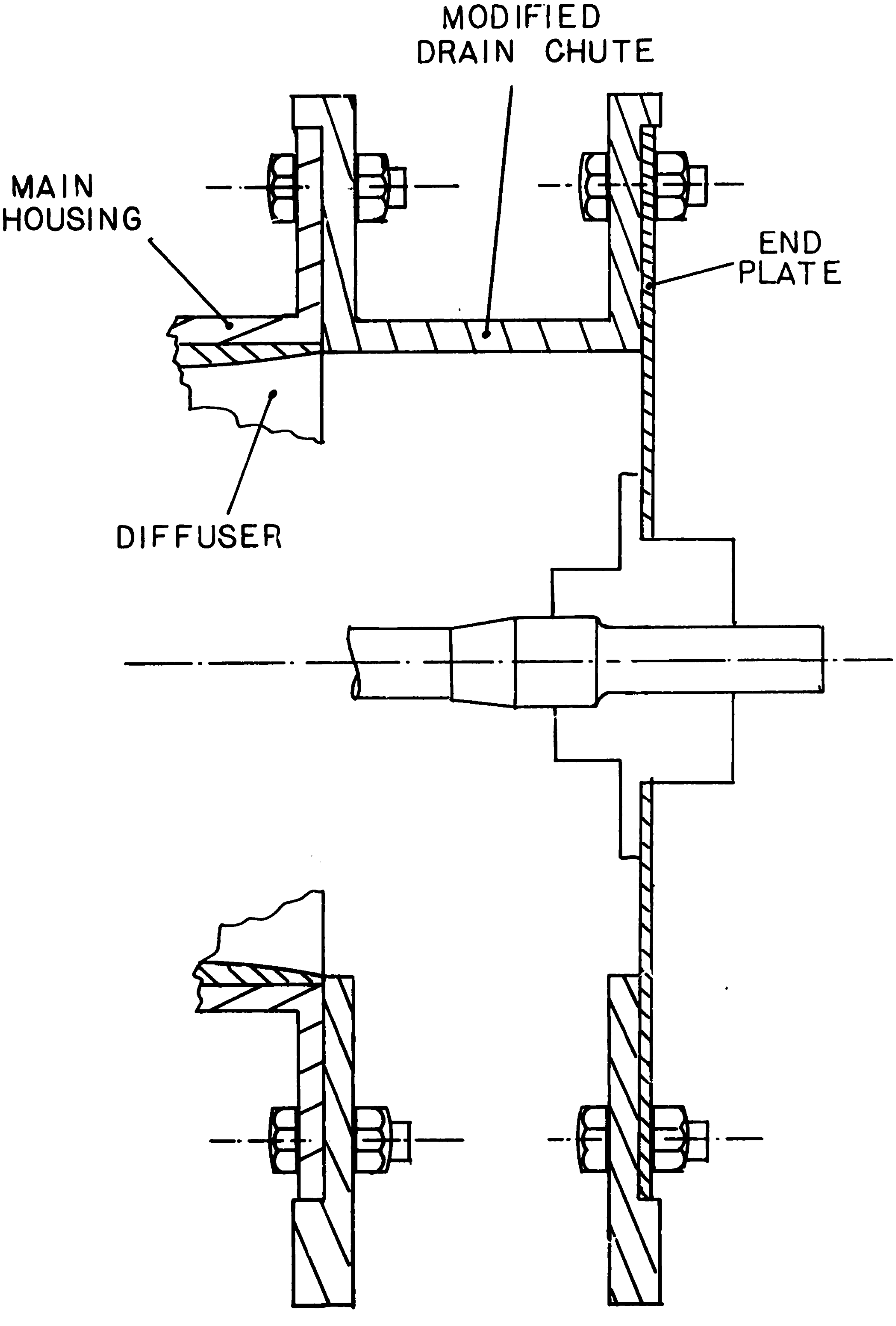

FIG.51: Modification of drain-chute for better

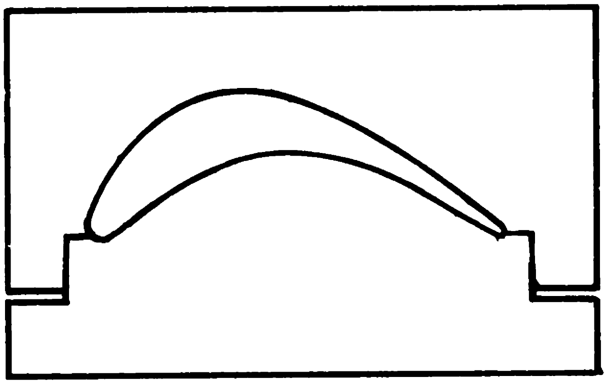

FIG. 52: Modified rotor-blade-mold for easier alignment

aligning the top and bottom halves in the assembling. No complication in the manufacturing techniques is introduced to incorporate this modification. Similar design can also be introduced for the diffuser-blade-mold.

5.4 Manufacturing materials

Fiberglass-reinforced plastic appears to be a good choice of material for the manufacture of the turbine housing. The techniques involved are simple and the procedures required are straight-forward. It proves to be superior to metal as more complicated techniques such as thich metal cutting, bending, casting, welding, heat-treating,etc., are avoided. The products are satisfactory in terms of accuracy, strength and weight (the assembled turbine weighs about 80 pounds). Moreover, design changes such as the inlet modification can be incorporated without any complication of the manufacturing techniques involved.

In the manufacture of the blades, plastic is extremely desirable in giving high accuracy to the desired profile easily. Again, the procedures required are simple enough to be carried out in an ordinary machine shop. However, full-power testing would be necessary to determine whether the strength of the material is adequate.

In case of the nose and the various hubs, plastic proves to be a good choice of material in producing components with quite complex geometry accurately. However, the material is extremely vulnerable to wearing due to particles in the flow which makes it unfit to be used as bearing material. This weakness of rapid wearing greatly affects the reliabilty of the machine from the maintenance point of view. In addition, misalignment introduced by the excessive wearing would deteriorate the performance. Similar to the case of the thrust-bearing, the problem could be solved by either introducing better filtering devices upstream of the turbine or discarding the present bearing design in favor of water-tight conventional bearings.

Aluminum (introduced as a modification of material for the output shaft) was found to be slightly inadequate for that component. Small distortion was detected after testing had been performed. It is recommended that either bronze or stainless-steel be used as a substitution.

5.5 Manufacturing techniques

The approach to the choice of manufacturing processes appears to be a good one. Components with complicated geometry are manufactured with simple techniques and facilities even though the procedures may be a bit lengthy. Nevertheless, the rate of production would increase with experience obtained from successive trials.

The accuracy of the products are in general acceptable. For example, the set-up used in the manufacture of the axisymmetric components yields a tolerance of 0.5 mm easily. As for the parts which require higher precision, modification of the set-ups and techniques is necessary if subsequent machining is to be avoided. For example, bearings could be fitted to the pivot in the set-up for the making of the axisymmetric molds to give a better tolerance.

The manufacturing process of plastic molding took a considerable amount of labor. This could be due to the fact that the workers were inexperienced, and that different alternatives were attempted to find the optimum one. The techniques presented here would therefore be much more effective if a significant number of machines are being produced at the same time.

The manufacture of the turbine by molding would be very efficient in medium-scale production. Sections which have to be molded separately and then assembled together could be molded as one piece. For example,the stator-hub, the blades and the blade-mount could be molded as one piece. Higher accuracy and better product control could also be achieved.

5.6 Cost of materials

An estimate of the cost of manufacturing materials is given in TABLE 4. It should be noted that the figures presented do not account for materials used in experimentation to gain experience and for unsuccessful trials. The actual cost would therefore be slightly less than this amount.

Even though the figures shown in TABLE 4 are rough estimates, they indicate that the material cost for the turbine is rather low. The cost-effectiveness of the machine would then due largely to the cost of labor.Further investigations would be helpful to evaluate the manufacturing processes and materials employed from the cost-optimization point of view.

5.7 Testing

With the apparatus shown in FIG. 42, experimental errors may be introduced from the following sources.

(i) The fluctuation of the flow due to the system dynamics of the circuit contributes errors

TABLE 4: ESTIMATION OF RETAIL OF MANUFACTURING MATERIALS FOR ONE TURBINE

ITEM	COST
Resin (10 gallon)	$100.00
Glass fibers	$ 45.00
MEK, base wax, etc.	$ 20.00
Gypsum	$ 33.00
Metals*	$ 55.00
Miscellaneous*	$ 50.00
	TOTAL $ 303.00

*Rough estimates only.

to the flow and pressure measurements.

(ii) The fluctuation of the torque and speed of the turbine induces vibration of the brake-scale assembly which gives rise to errors in the measurements of power output.

The following recommendations are suggested for further testing at full power.

(i) The rotor should be statically and dynamically balanced to prevent damage of bearings as the runaway speed would be much higher.

(ii) A stronger brake-system would be necessary.

(iii) The addition of a shock absorber would be desirable to eliminate the torque vibrations.

(iv) A better dissipation of the power output would be required. If the current disk-brake concept is to be retained, cooling of the disk would be necessary.

APPENDIX A: CHARACTERISTICS OF HYDROCAL B11 AND ULTRACAL 30

PRODUCT	PARTS OF WATER BY WEIGHT PER 100 PARTS OF GYPSUM	HAND MIX VICAT SET (minutes)	COMPRESSIVE STRENGTH (psi)		SETTING EXPANSION (%)	
			MIN. WET	MIN.DRY	FINAL	MAX
HYDROCAL B 11	42 - 44	25 - 35	1500	3750	0.070	0.085
ULTRACAL 30	43 - 46	25 - 30	2600	4300	0.055	0.075

APPENDIX B: (A) PROPERTIES AND (B) CURING CHARACTERISTICS OF POLYLITE 33-031.

(A) PROPERTIES OF CURED UNFILLED CASTINGS OF POLYLITE 33-031

Barcol Hardness	47
Tensile Strength	10000 psi
Flexural Strength	13000 psi
Compressive Strength	22000 psi
Flexural Modulus	550000 psi

(B) CURING CHARACTERISTICS OF POLYLITE IN LAMINATES

(Two plies of 10 oz. cloth and one ply of 1.5 oz. mat)

TEMPERATURE (Deg. F)	% MEK PEROXIDE	GEL TIME (Min.)	TIME FROM CATALYZATION TO BARCOL HARDNESS 10-20 (Min.)
65	0.25	65 - 85	275 - 300
	0.50	35 - 45	90 - 110
	1.00	20 - 30	65 - 85
77	0.25	40 - 60	150 - 175
	0.50	20 - 30	55 - 75
	1.00	12 - 18	40 - 60
90	0.25	30 - 40	110 - 140
	0.50	15 - 25	35 - 55
	1.00	7 - 12	30 - 45

REFERENCES

[1] Durali, Mohhammad, " DESIGN OF SMALL WATER TURBINES FOR FARMS AND SMALL COMMUNITIES " , Technology Adaption Project Report, M.I.T., Cambridge, Mass..

[2] Hubbard, James, "APPARATUS FOR THE TESTING OF A SMALL WATER TURBINE" , S.B.M.E. thesis, M.I.T. 1976.

[3] Horlock, J.H., " AXIAL FLOW TURBINES ", Krieger, 1966.

[4] Dixon, S.L., " FLUID MECHANICS AND THERMODYNAMICS OF TURBOMACHINERY ", Pergamon 1975.