HEAT TRANSFER TO BOILING LIQUIDS UNDER VACUUM

by

Richard Harding Braunlich
B.S., M.I.T.
1940

Submitted in Partial Fulfillment of the
Requirements for the Degree of
Master of Science

from the
Massachusetts Institute of Technology
1941

Signature of Author
Department of Chemical Engineering, May 10, 1940
Signature of Professor in Charge of
Research
Signature of Chairman of Department Committee
on Graduate Students

M.I.T. Graduate House
Cambridge, Mass.
May 16, 1941

15, 1942

Professor George W. Swett
Secretary of the Faculty
Massachusetts Institute of Technology
Cambridge, Massachusetts

Dear Sir:-

In partial fulfillment of requirements for the degree of Master of Science, I submit herewith a thesis entitled "Heat Transfer to Boiling Liquids ~~Under Vacuum~~."

Very truly yours,

Richard H. Braunlich

ACKNOWLEDGMENT

The author acknowledges with gratitude the kind assistance and advice of Professor W.H.McAdams and Mr. G.Williams under whose direction this research was done.

TABLE OF CONTENTS

TABLE OF FIGURES

SUMMARY

The purpose of this investigation was to continue the work of C. K. Walker[9] who designed and built an experimental boiler in 1940 for a study of heat transfer to boiling liquids under vacuum.

Distilled water was boiled in the all copper cylindrical boiler by means of a horizontal, submerged, chrome-plated copper tube internally heated by steam. Using a vertical reflux condenser, heat flux was measured for various values of Δt (temperature drop from the side surface of the tube to boiling water) and for various boiling temperatures. The following results were obtained:

1.) For a given Δt, the heat flux obtained with a clean tube was reproducible within ±15%.

2.) For values of Δt ranging from 12 to 30°F., a slight fouling of the surface increased the heat flux 40% above that obtained for the clean tube. This agrees quantitatively with a similar finding by Akin[1].

3.) For values of Δt ranging from 13 to 35°F., the heat flux varies approximately as the 2-2.5 power of Δt, depending on the boiling temperature.

4.) The maximum flux occurs at a Δt of 45°F. for all boiling temperatures used (110 to 212°F.), and is an exponential function of the boiling temperature rather than of the absolute pressure or viscosity of the boiling liquid alone.

5.) For a given Δt over the range of 45 to 150°F., the coefficients and also heat flux decrease with a decrease in the boiling temperature.

6.) Using octyl thiocyanate to promote the inside copper surface, very high steam side coefficients were obtained. The side surface temperatures of the tube wall were practically the same at the three points as shown in Figure XVII.

II. INTRODUCTION

The use of evaporation as an important part of many industrial processes has naturally led engineers to a study of heat transfer to boiling liquids. The designing engineer is greatly aided by experimental data in designing and predicting the performance of new equipment. The wide use of multiple effect evaporators, requiring boiling at pressures lower than atmospheric illustrates the importance of data on heat transfer to liquids boiling under vacuum.

It has been only recently, however, that any work has been done on the subject so that today the phenomenon of boiling under vacuum still remains one of the most important phases of heat transfer about which our knowledge is quite meagre.

Early investigators in the field of boiling liquids studied the phenomenon at atmospheric pressure and at low temperature differences; i.e., the temperature of the heating surface was very near that of the boiling liquid. These workers found that as the temperature difference between the heating surface and the liquid was increased, the coefficients of heat transfer increased markedly.

Later it was found that as the range of temperature difference is increased beyond that studied by the first investigators, a point is finally reached at which the heat transfer rate becomes a maximum. The temperature difference corresponding to this point is often termed the "critical" value. As the temperature of the heating surface is still further increased, the rate of heat transfer falls off at a rapid rate.At temperature differences below the critical value, the boiling is vigorous and has been described in the literature as "nuclear" boiling, while above the critical value boiling is much slower and has been called "film" boiling because the heating surface is insulated by a film or blanket of superheated vapor of the liquid being boiled.

The factors affecting heat transfer to boiling liquids are numerous and very little is known as to the degree in variation of heat transfer caused by variation of these factors. The most important factors seem to be temperature difference, absolute pressure, viscosity, surface tension, surface wetting, thermal conductivity, and surface roughness. Numerous equations have been proposed to correlate existing data on heat transfer to boiling liquids, but no one equation fits all of the data.

The general effect of pressure on heat transfer to boiling liquids has been studied in the past. Claassen[1], in 1902, using an experimental coil evaporator, showed that the overall coefficients from steam to boiling liquid decreased with a decrease in the pressure on the liquid. For the same rate of heat transfer the overall coefficient obtained for water boiling at 158°F. was 25% lower than that obtained at 212°F.

Badger and Shepard[1], using a vertical tube, basket type evaporator, found a 30 to 45% decrease under the same conditions.

Cryder and Finalborgo[4], using an electrically heated copper tube boiled various liquids under vacuum. Their results show a decrease in coefficients as the pressure was lowered, but the data were obtained over a low range of temperature drop (tube wall to boiling liquid).

Sherman and Kaulakis[8], using a steam heated, nickel-plated copper tube, boiled several alcohols and water under vacuum. Their results also show a marked decrease in coefficients with decrease in pressure. The lowest boiling temperature reached in runs with water was 155°F.

Insigner and Bliss[6], using an electrically heated, chromium-plated copper tube, boiled water under vacuum. The highest temperature difference used was 16.6°F., and the lowest boiling point was 187°F. Their results show a marked decrease in coefficients with vacuum in spite of the low temperature difference range.

In 1940, C.K. Walker[9] designed and built an experimental boiler housing a horizontal, steam heated, chromium-plated copper heating tube. He was able to obtain pressures low enough to boil water at 78°F. As time was short he was unable to obtain data of a comprehensive nature. An examination of the original data indicated that measurements had been made before equilibrium conditions had been reached in the boiler.

It was the purpose of this investigation to continue the work of Walker with the same apparatus exploring wide ranges of temperature difference and pressure.

III. PROCEDURE

A.) Description of Apparatus

The apparatus used in this investigation was designed and built by C. K. Walker[9] in 1940. It consists primarily of a cylindrical copper boiler containing a horizontal, chrome-plated, copper tube internally heated with condensing steam. Vapors are totally condensed in a vertical copper reflux condenser. A diagram of the apparatus is shown in Figure I. The details of the boiler construction are presented in section A of the appendix.

The steam line consists (in order from the steam main) of a condensate trap, a two inch high pressure tee containing glass wool for filtering purposes, a pressure regulator, a thermometer well, a Bourdon pressure gage, the heating tube itself, another thermometer well, two auxiliary condensers to aid in condensing steam under vacuum, and a vented condensate trap fitted with a water driven aspirator to draw vapor out of the trap when the steam line is run under vacuum.

The boiler is about a foot long and eight inches in diameter. The heating tube is standard half-inch copper pipe, chrome-plated outside, 0.840 inches in outside diameter, 0.109 inch wall thickness, 1212 inches in length, giving an outside

FIGURE I

DIAGRAM OF APPARATUS

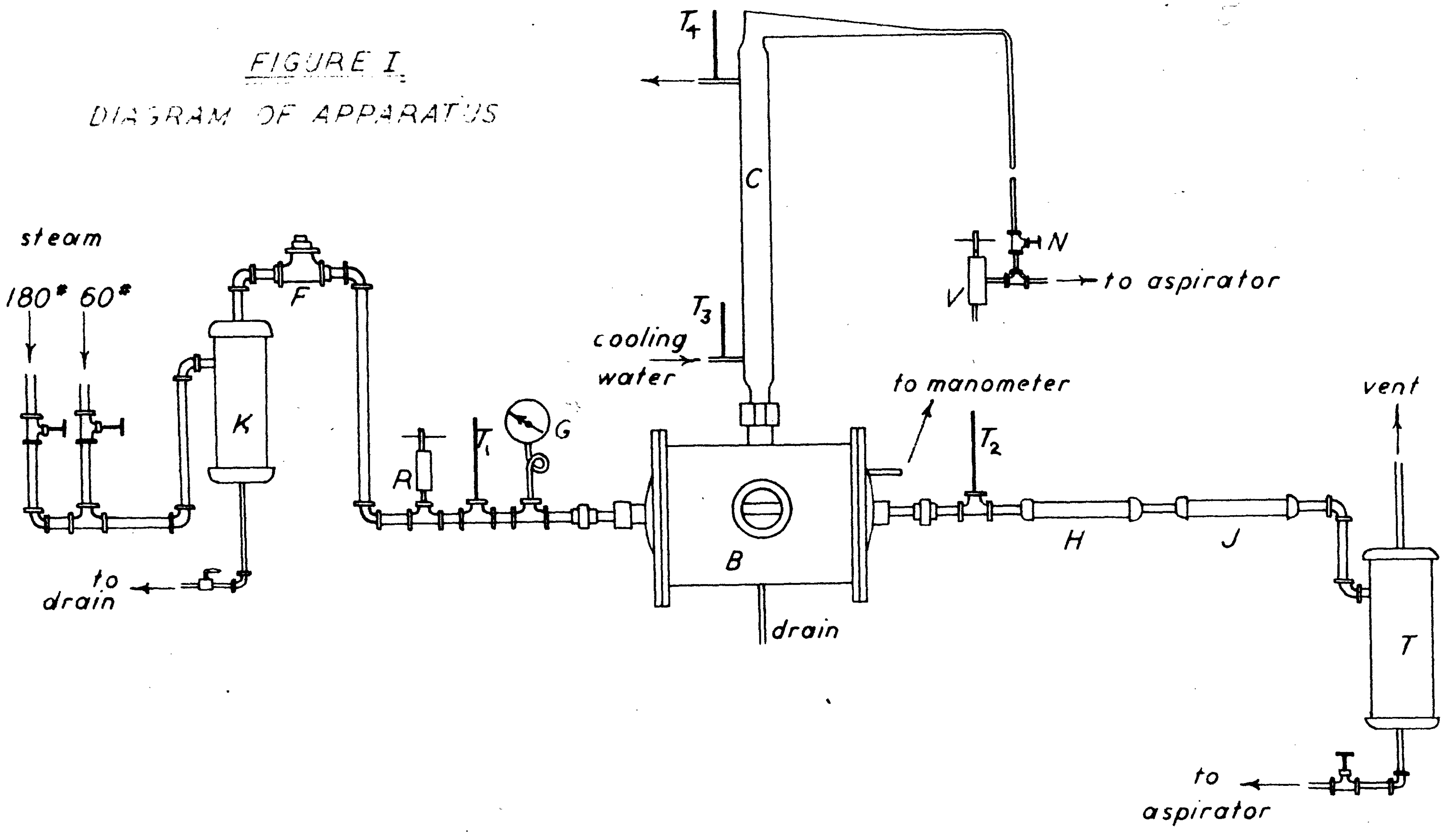

R.H.B.
4/29/41

Note: see legend on foll. page

LEGEND FOR FIGURE I

B - Boiler

C - Condenser

F - Steam Filter

G - Pressure Guage

H,J - Auxiliary Condensers

K,T - Traps

N - Needle Valve

R - Pressure Regulator

V - Vacuum Regulator

heating area of 0.222 square feet. Thermocouples are installed in the side tube walls to measure surface temperatures. Details of the thermocouple installation are presented in section,B of the appendix.

The vertical reflux consists of a two inch copper tube inside a $2\frac{3}{4}$ inch steel water jacket. The condensing area is 2.2 square feet.

A water aspirator is used to maintain a given vacuum on the boiler, the vacuum being regulated by a needle valve and a vacuum regulator (a pressure regulator with the connections reversed).

B.) Experimental Procedure

Before each run (runs 10, 18,19,20 excluded) the heating tube was removed from the boiler and cleaned on both sides. The chrome-plate was polished lightly with medium grade steel wool. The inside was cleaned with a stiff wire brush and then coated with octyl thiocyanate by means of a bristle brush which had been dipped in the promoter. Promoter was also added to the filter from time to time. The boiler was filled with distilled water until the top of the heating tube was submerged to a depth of about $1\frac{1}{2}$ inches. If the run was to be a vacuum run the vacuum line was connected to the top of the condenser and the water aspirator started. If low temperature steam (below 212°F.) was desired a water aspirator was applied to the condensate trap T. The steam valve was then cracked to give the desired pressure in the heating tube. After boiling had started the vacuum on the boiler was adjusted roughly with the vacuum regulator and accurately by adjusting the cooling water rate. The cooling water rate was regulated so that there was never less than a 20°F. rise from inlet to outlet.

Tube wall temperatures were measured by use of thermocouples and a Brown portable potentiometer, Department Serial No. 150. A thermocouple located about two inches from one side of the tube gave the boiling temperature.

Heat flux was measured by noting the rate of flow and the temperature rise of the cooling water flowing through the condenser. The rate of flow was measured by determining the time, using a stop watch, to fill a 1000 cc. graduated cylinder. If the rate was too high to give sufficient accuracy, a calibrated bucket (8100 cc.) was used in place of the 1000 cc. cylinder. Thermometers in the inlet and exit water lines of the condenser gave the temperature rise.

A run consisted of obtaining values of heat flux at various Δt's (temperature drop from tube wall to liquid) for a particular boiling point. In all instances, at least fifteen minutes were allowed to elapse between taking data for two points in order that the apparatus might reach a steady state. Data for water boiling at 212°F. were taken first and served as a check on the reliability of subsequent vacuum runs. After each vacuum run one or two atmospheric points were taken and compared with the atmospheric curve. If these points checked the curve within 15% the vacuum data were considered reproducible. Data were taken for water boiling at 212°,190°,170°,150°,130°, and 110°F. A slight fouling of the tube at one period resulted in increased values of heat flux. Runs 18,19 and 20 were made to learn more if possible about this phenomenon.

IV. RESULTS

The results of this investigation are shown in Figures III to XV. The following summary will expedite a study of the results.

1.) For a given Δt from tube to distilled water boiling at 212°F., Figures III and IV show that the heat flux varies less than ±15% for a clean tube and is increased 40% by a slight deposit of scale.

2.) Figure V is a plot of heat flux versus Δ t from heating surface to boiling liquid for distilled water boiling at 212°F. Data of other observers are included and run as low as seven-tenths of the values obtained by the author below the critical Δ t (45°F.) and three-tenths at the highest Δ t (90°F.).

3.) Figures VI to IX present plots similar to those in Figure V for water boiling at 190°, 170°, 150°, 130°, and 110°F. In general, the data of other observers lie below the present data.

4.) Figure X is a composite of the authors data given in Figures VI to IX. The effect of reducing the boiling point by the use of vacuum, which in general reduces the flux at a given Δ t, is shown.

5.) Figure XI shows that the maximum flux may be correlated by an exponential function of the boiling temperature. Contrary to the statement in the literature the maximum flux was not found to be an exponential function of the absolute pressure; neither was it found to be an exponential function of the viscosity of the boiling liquid.

6.) Figure XII shows that the overall coefficients depend on the overall Δt (from steam to boiling liquid) and the boiling temperature. Overall coefficients as high as 6000 were obtained at atmospheric pressure.

7.) Figures XIII to XV show the three usual methods of plotting the data. For values of Δt ranging from 13 to 35°F., the slopes of the three curves are as follows:

$$d(q/A)/d(\Delta t) = 2.5 = n+1$$

$$d(\ h\ )/d(\Delta t) = 1.5 = n$$

$$d(h)/d(q/A) = .6 = \frac{n}{n+1}$$

FIGURE III

PLOT OF HEAT FLUX VS. TEMP. DIFF. SHOWING
CONSISTENCY OF RESULTS
CR-PL. COPPER

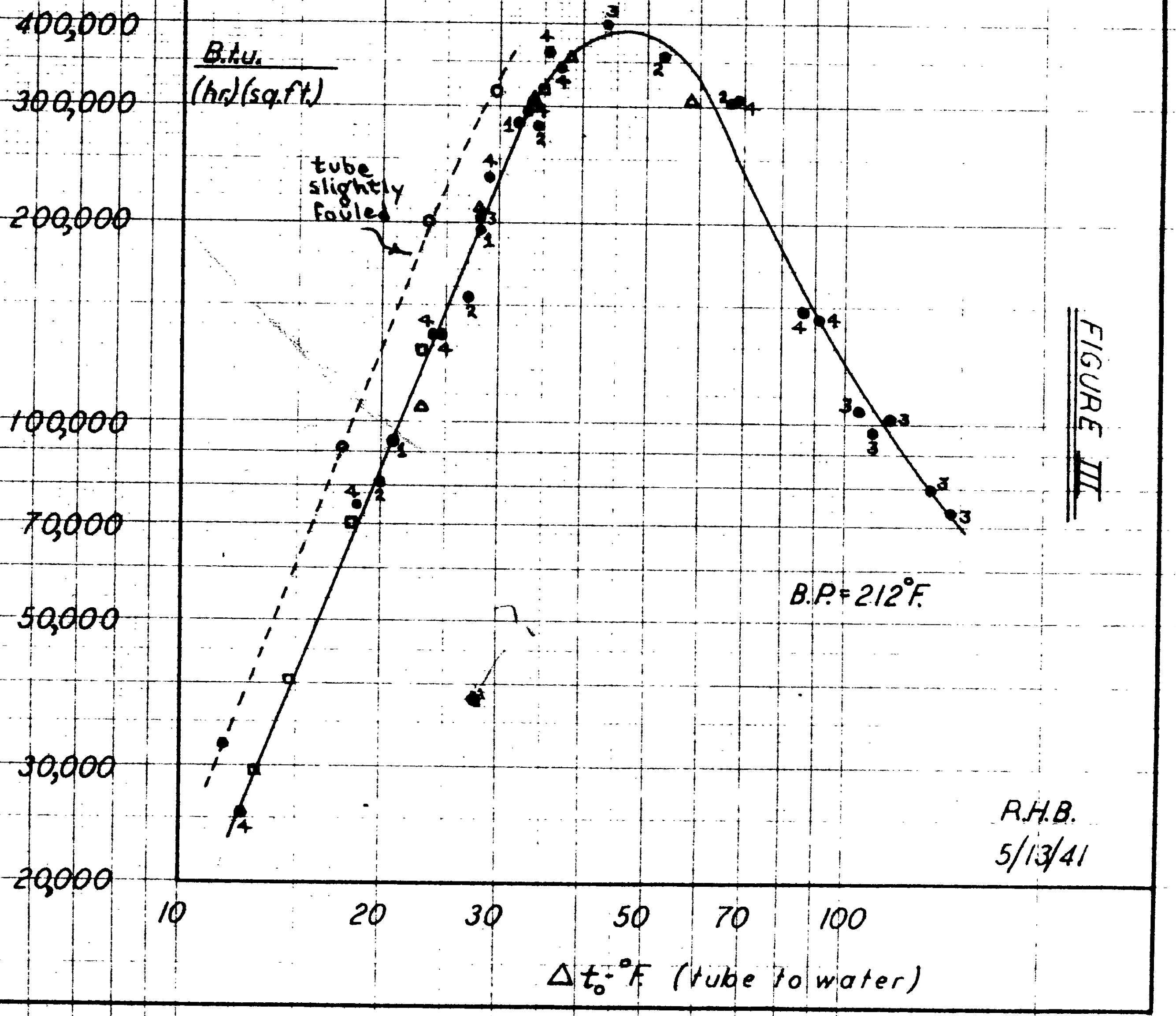

R.H.B.
5/13/41

Symbol	Run	Date Made
$\bullet_1$	1	4/8/41
$\bullet_2$	2	4/13/41
$\bullet_3$	3	4/17/41
$\bullet_4$	4	4/21/41
△	5	4/22/41
○	10	4/28/41
□	16	5/6/41

PLOT SHOWING LOCATION OF ATMOSPHERIC CHECK POINTS WITH RESPECT TO THE STANDARD ATMOSPHERIC CURVE (FIG.)

CR-PL. COPPER

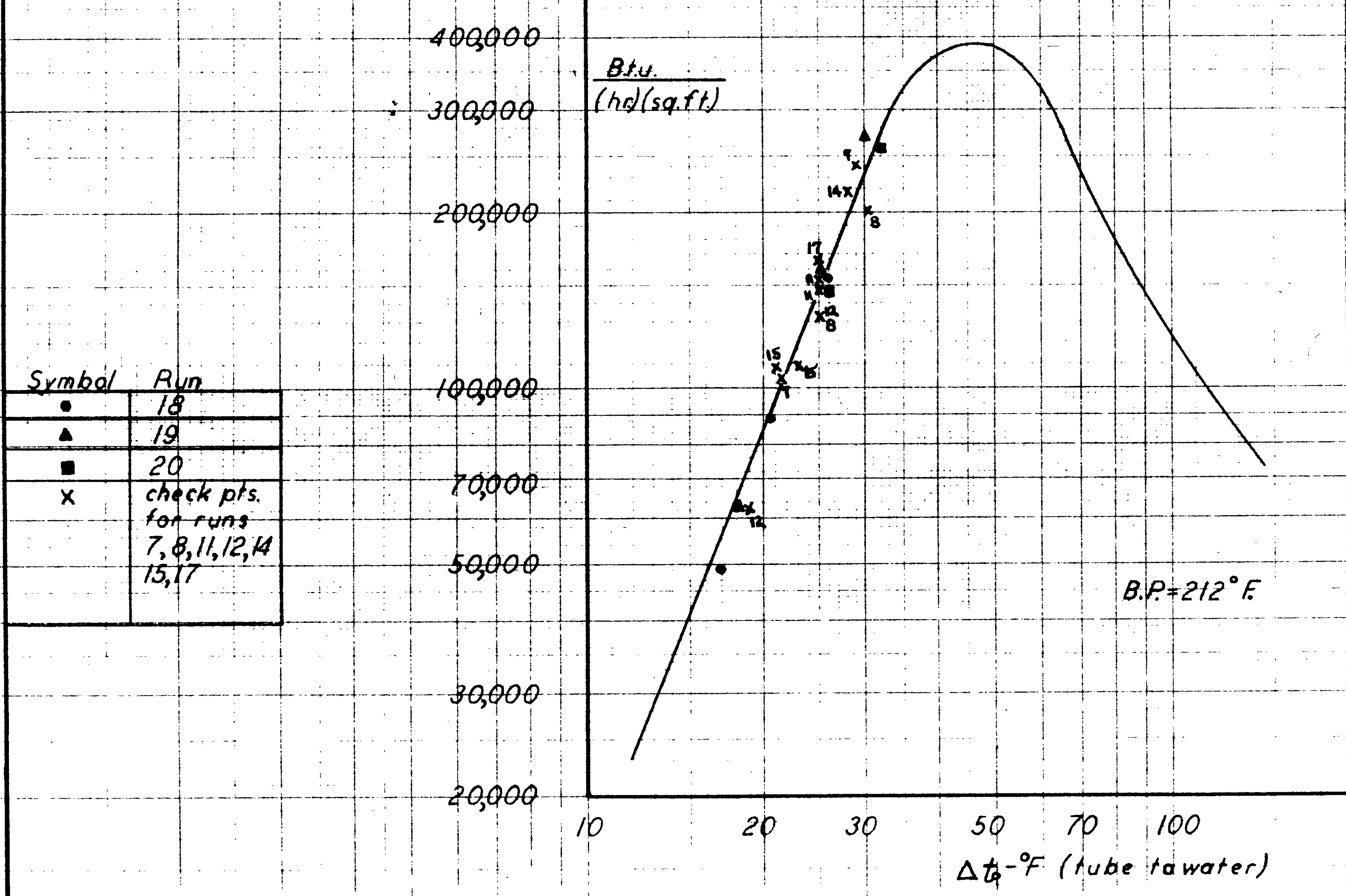

FIGURE IV

R.H.B.
5/13/41

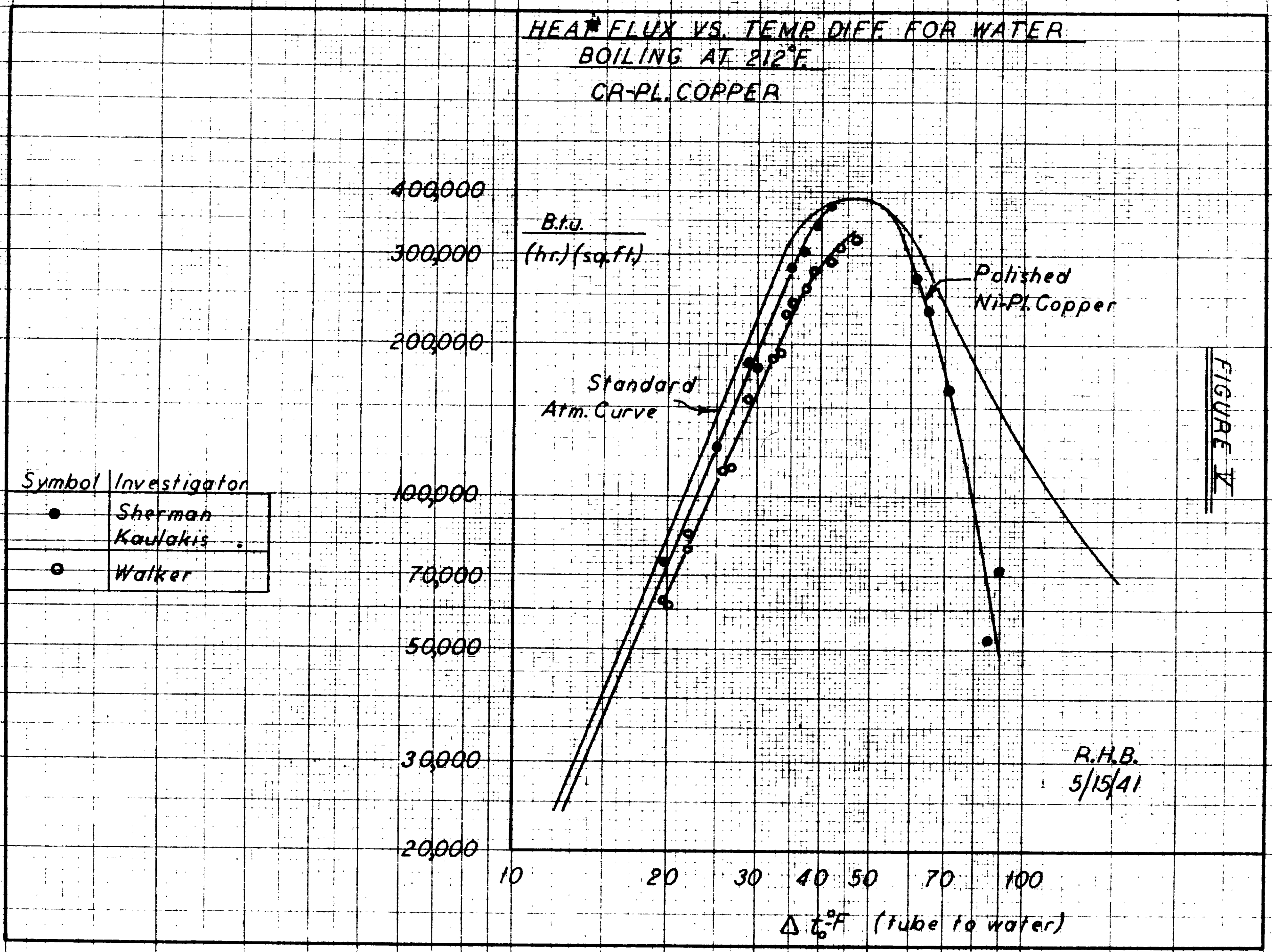
HEAT FLUX VS. TEMP DIFF. FOR WATER
BOILING AT 212°F.
CR-PL. COPPER
B.t.u. / (hr.)(sq.ft.)
400,000
300,000
200,000
100,000
70,000
50,000
30,000
20,000
10
20
30
40
50
70
100
Δ t_o °F (tube to water)
Standard Atm. Curve
Polished Ni-Pl. Copper
R.H.B.
5/15/41
Symbol | Investigator
● Sherman Kaulakis
○ Walker

FIGURE V

FIGURE VI

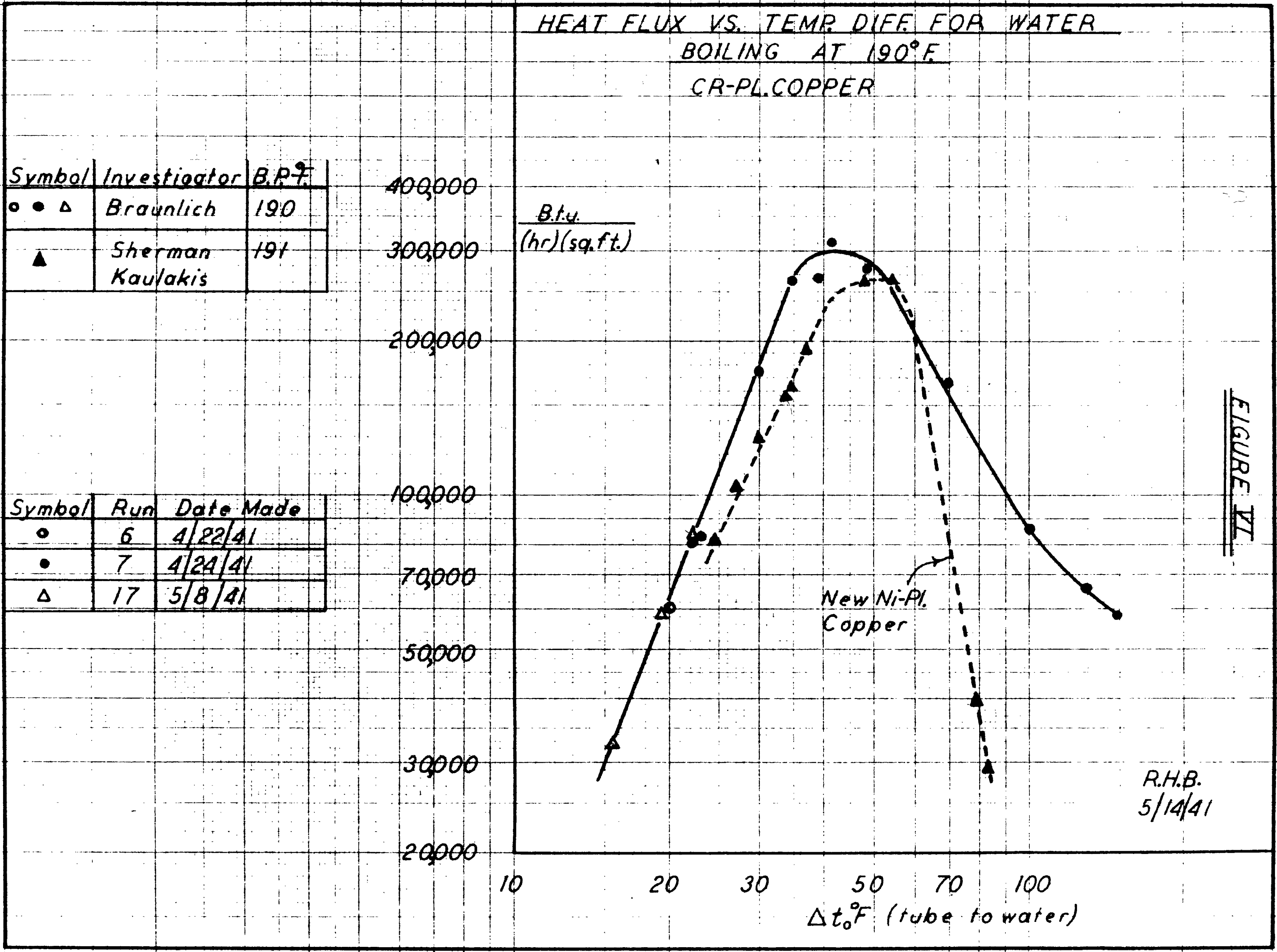

Symbol	Investigator	B.P.°F.
○ ● △	Braunlich	190
▲	Sherman Kaulakis	191

Symbol	Run	Date Made
○	6	4/22/41
●	7	4/24/41
△	17	5/8/41

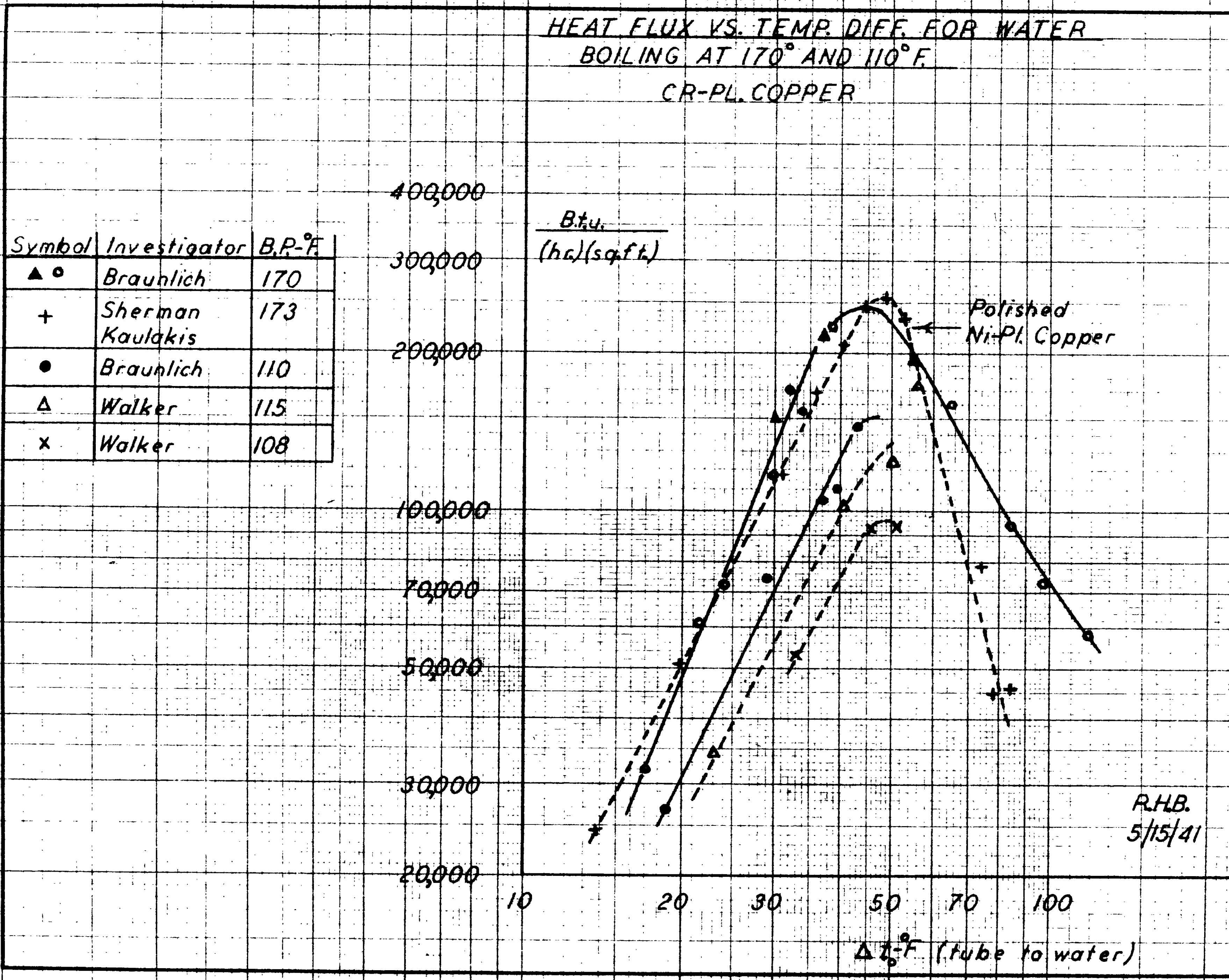

FIGURE VII

HEAT FLUX VS. TEMP. DIFF. FOR WATER
BOILING AT 170° AND 110° F.
CR-PL. COPPER

Symbol	Investigator	B.P.-°F.
▲ ○	Braunlich	170
+	Sherman Kaulakis	173
●	Braunlich	110
△	Walker	115
×	Walker	108

R.H.B.
5/15/41

FIGURE VIII

HEAT FLUX VS. TEMP. DIFF. FOR WATER
BOILING AT 150° F.
CR-PL. COPPER

Symbol	Investigator	B.P.-°F.
■ ● ○ ▲	Braunlich	150
×	Sherman Kaulakis	155
△	Walker	148

Symbol	Run	Date Made
■	11	5/29/41
●	12	5/1/41
○	13	5/2/41
▲	17	5/8/41

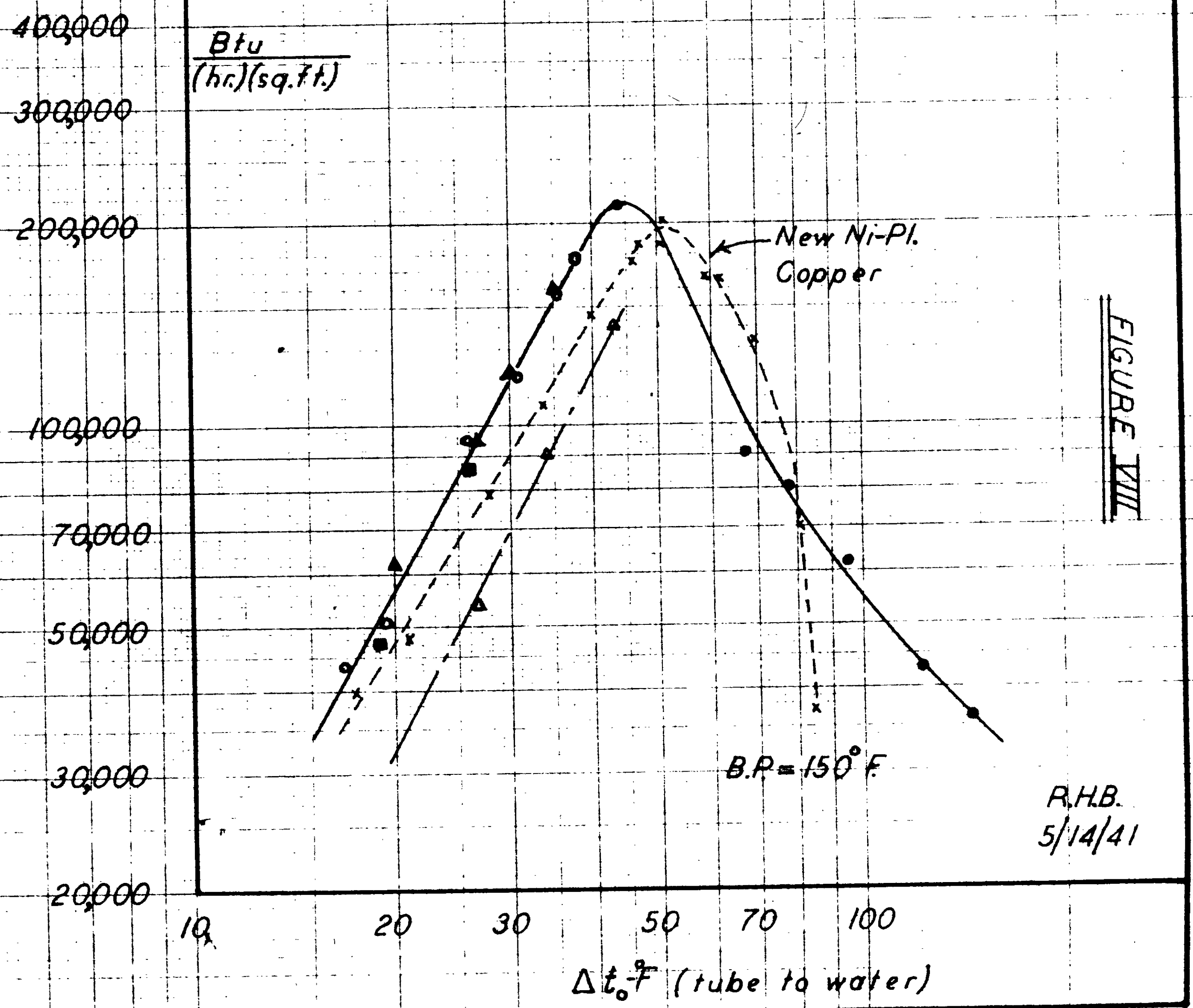

R.H.B.
5/14/41

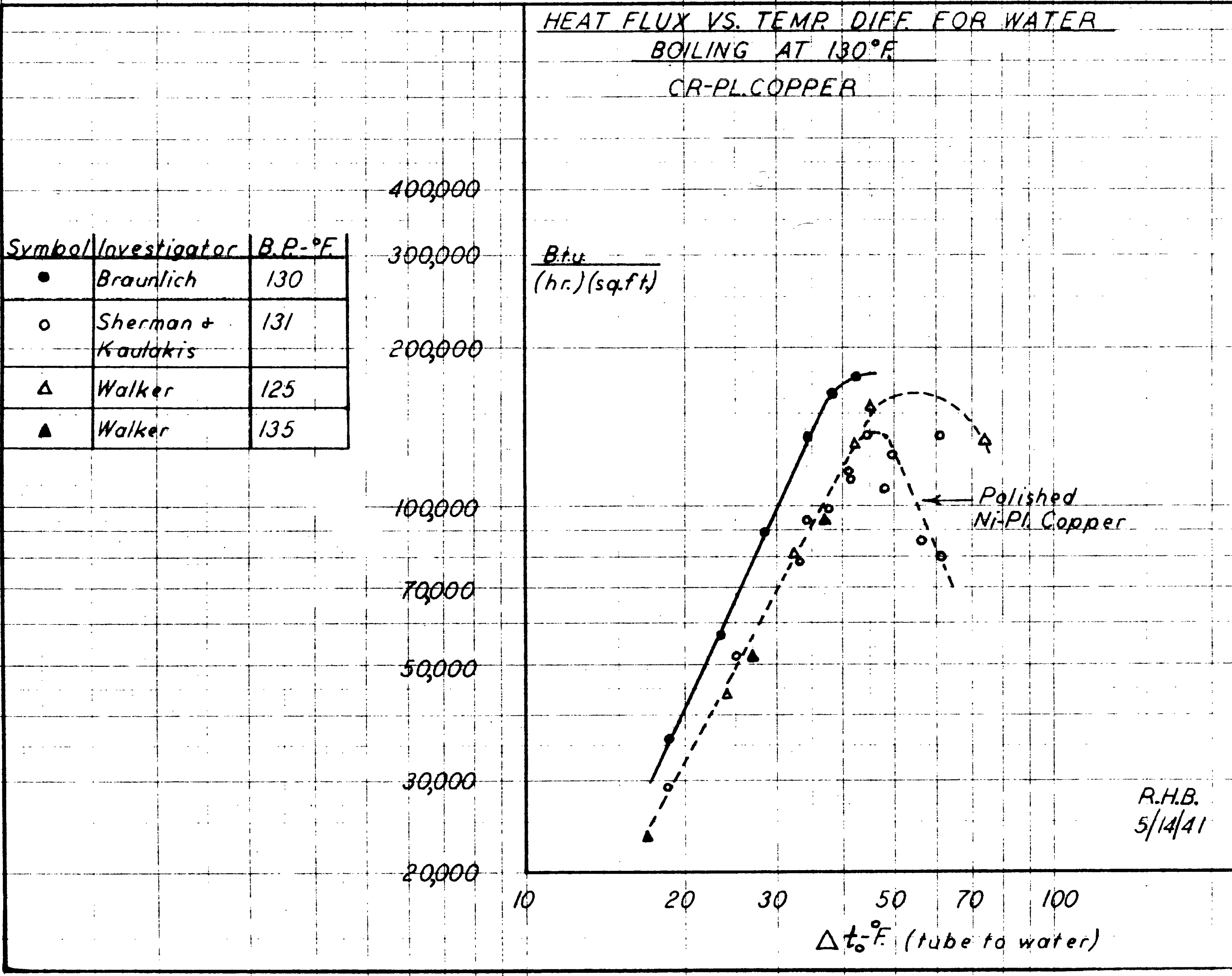

FIGURE IX

HEAT FLUX VS. TEMP. DIFF. FOR WATER
BOILING AT 130°F.
CR-PL. COPPER

Symbol	Investigator	B.P.-°F.
●	Braunlich	130
○	Sherman + Kaulakis	131
△	Walker	125
▲	Walker	135

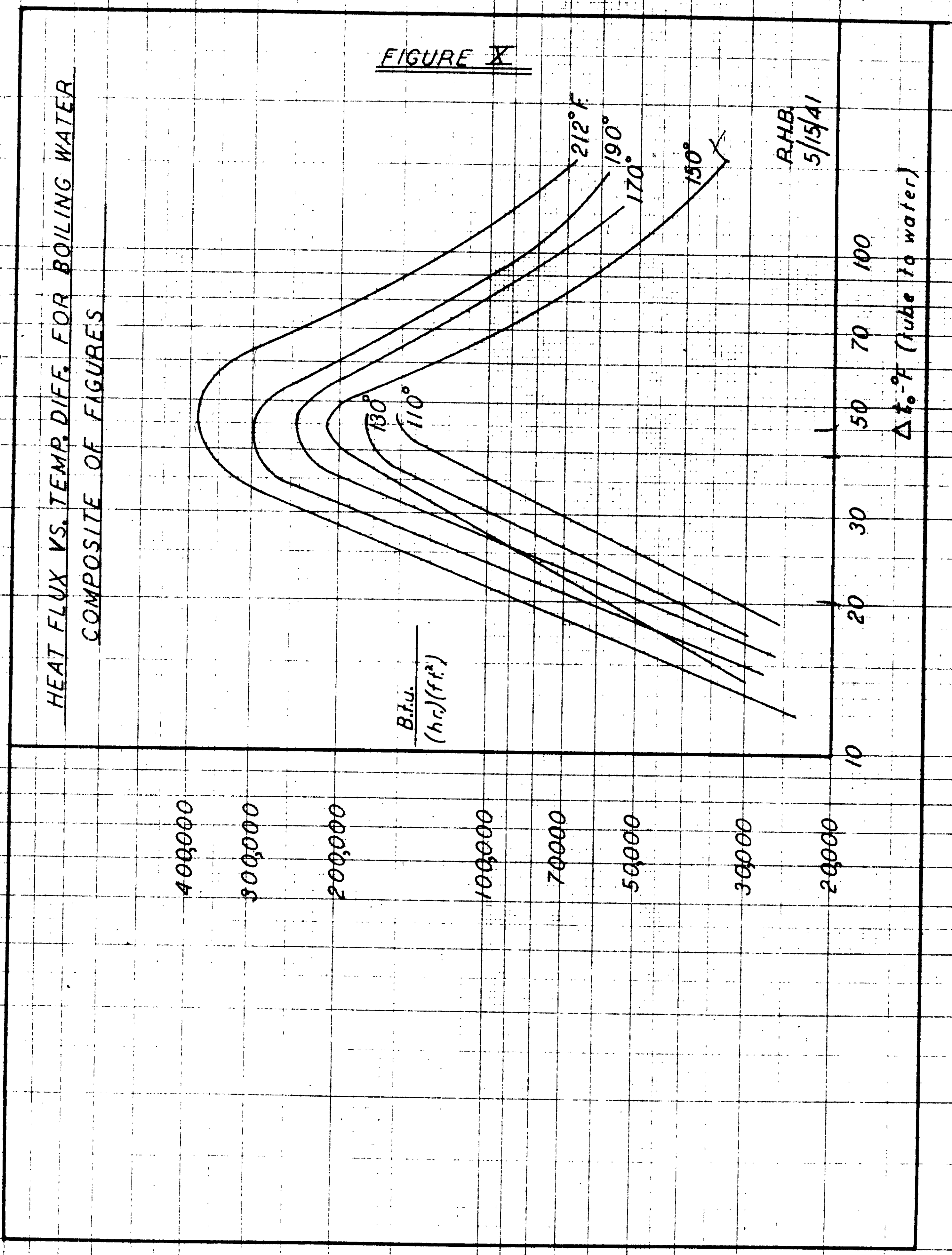

FIGURE X

HEAT FLUX VS. TEMP. DIFF. FOR BOILING WATER
COMPOSITE OF FIGURES

FIGURE XI

MAXIMUM HEAT FLUX VS. TEMPERATURE OF BOILING WATER

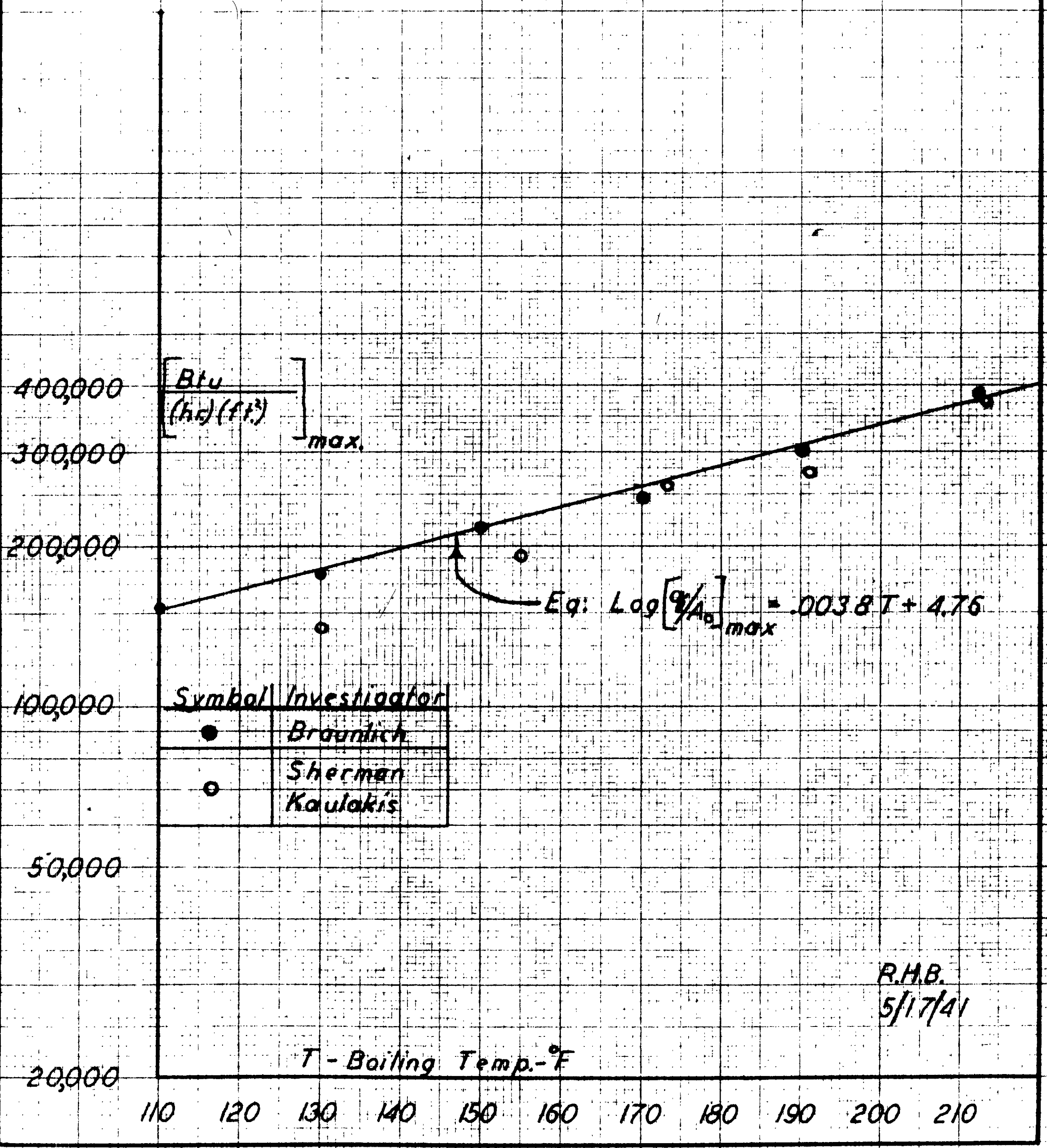

R.H.B.
5/17/41

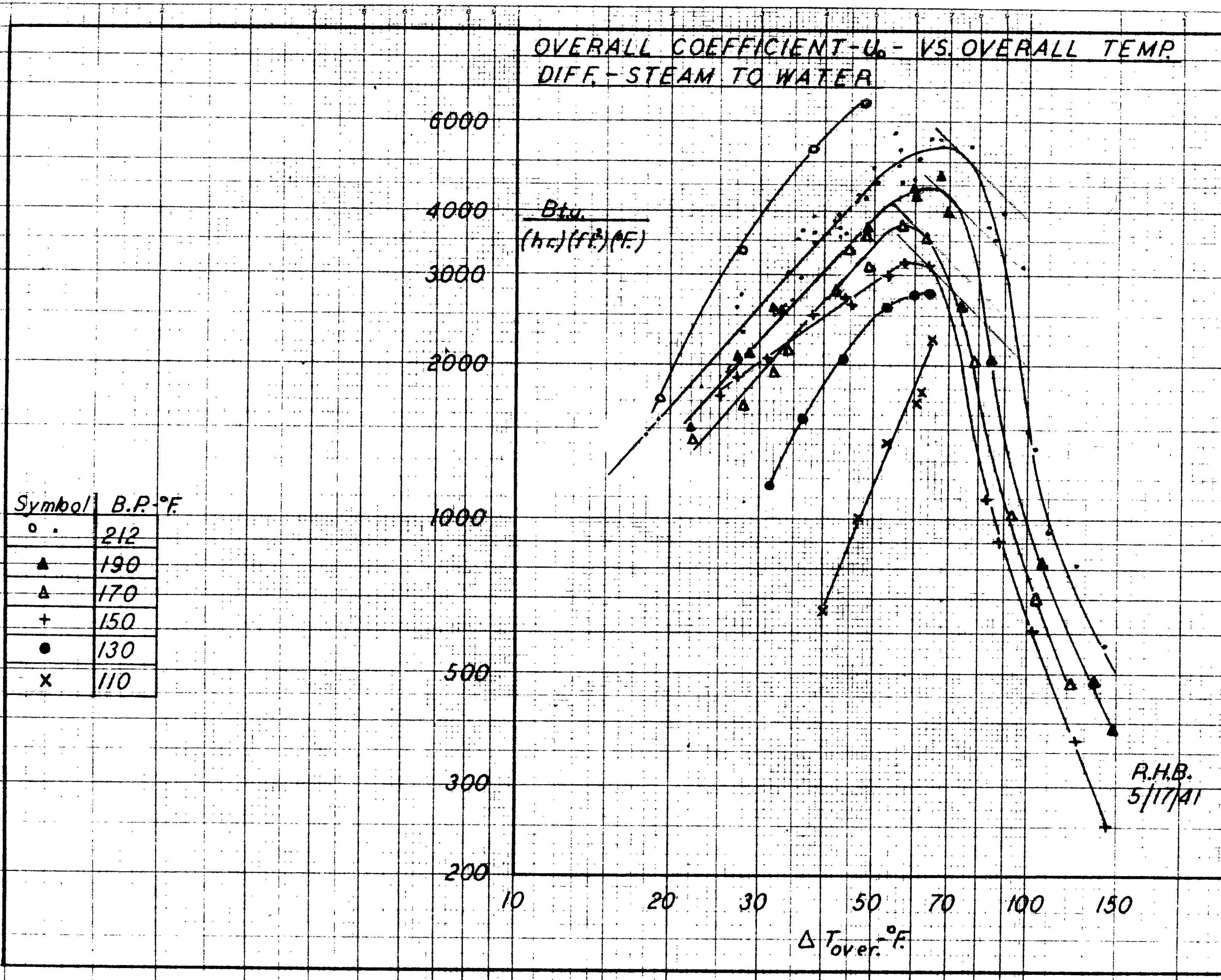
OVERALL COEFFICIENT-U_o- VS. OVERALL TEMP. DIFF.-STEAM TO WATER
Btu. / (hr.)(ft.²)(°F.)
6000
4000
3000
2000
1000
500
300
200
10
20
30
50
70
100
150
Δ $T_{over.}$-°F.
Symbol
B.P.-°F.
○ •
212
▲
190
△
170
+
150
●
130
×
110
R.H.B.
5/17/41

FIGURE XII

VARIOUS METHODS OF PLOTING THE DATA

WATER BOILING AT 212°F.

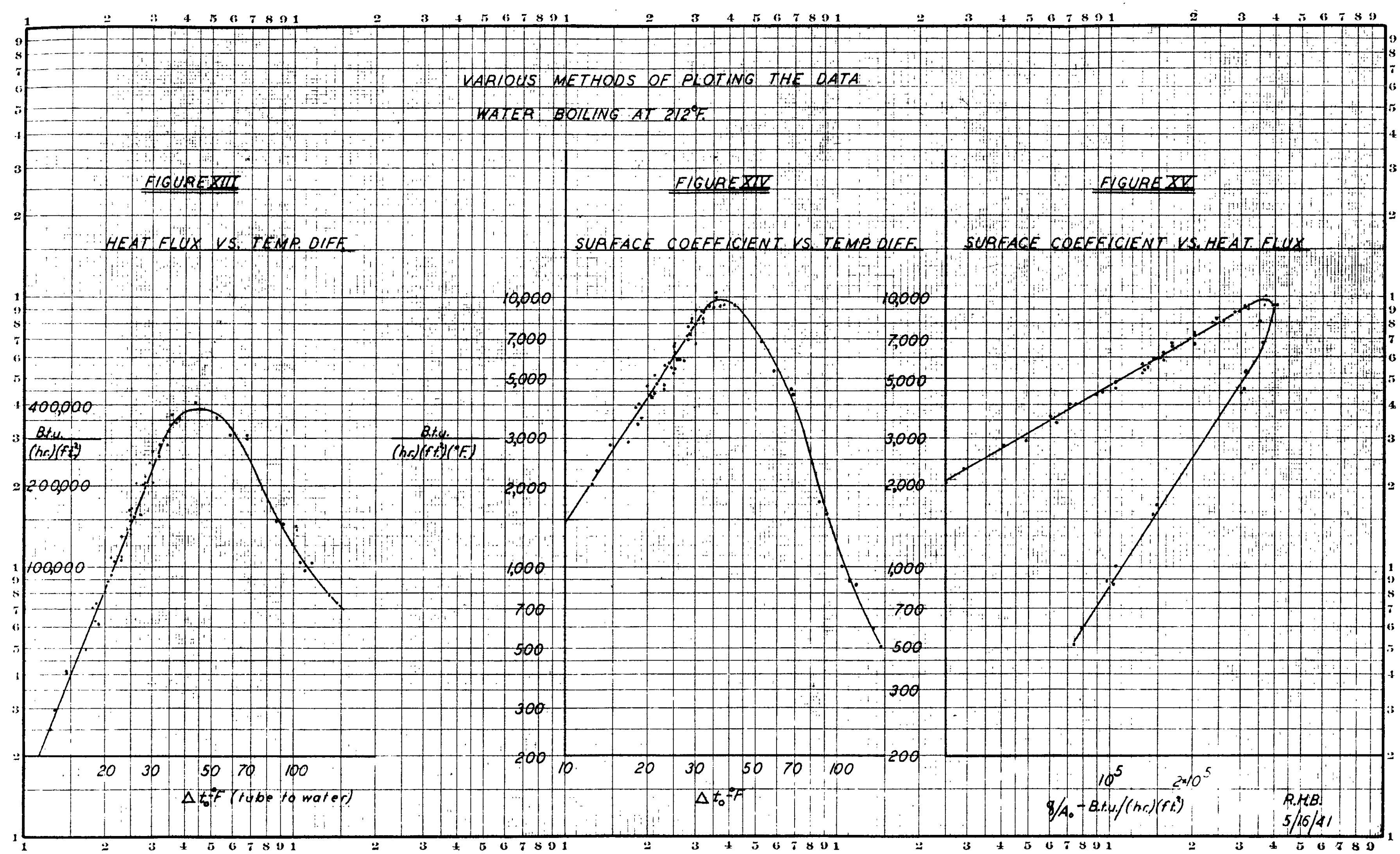

FIGURE XIII

HEAT FLUX VS. TEMP. DIFF.

FIGURE XIV

SURFACE COEFFICIENT VS. TEMP. DIFF.

FIGURE XV

SURFACE COEFFICIENT VS. HEAT FLUX

R.H.B.
5/16/41

DISTILLED WATER
BOILING ON CR-PL.
COPPER TUBE.

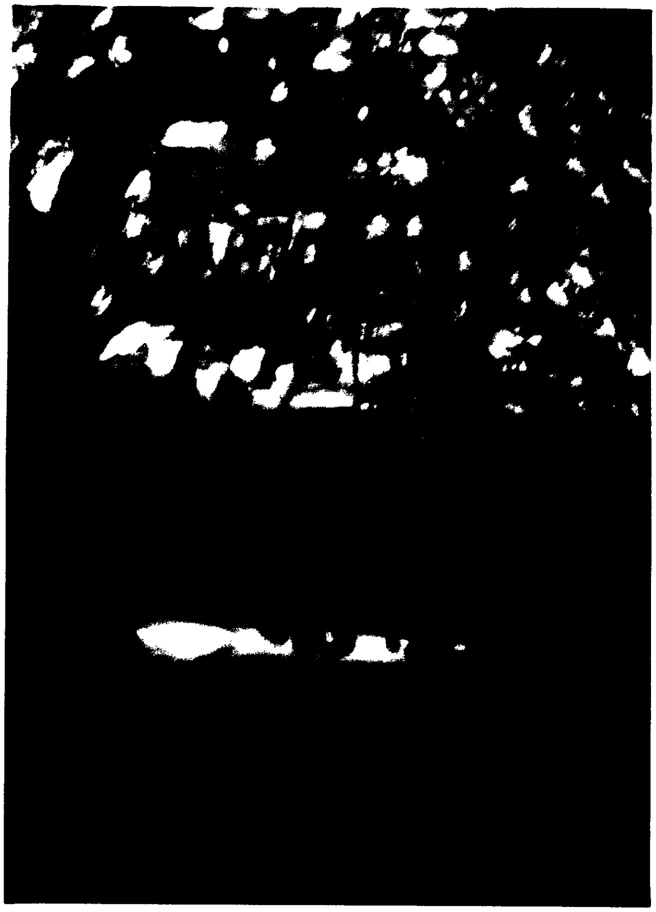

$t_o = 13^{o}F.$

$q/A_o = 30{,}000 \frac{B.t.u.}{(hr.)(ft.)^2}$

$t_o = 19^{o}F.$

$q/A_o = 76{,}000$

t_o = 23°F.

q/A_o = 120,000

t_o = 28°F.

q/A_o = 200,000

t_o = 34°F.

q/A_o = 315,000

t_o = 66°F.

q/A_o = 280,000

$t_o = 100^oF.$

$q/A_o = 120,000$

V. DISCUSSION OF RESULTS

When C. K. Walker designed the boiler which was used in this investigation he assumed that the heating tube would remain clean as long as the liquids employed were free from contamination - the boiler and condenser having been carefully cleaned initially. Therefore, he made no allowances in the final design for an occasional removal of the heating tube for cleaning. After a short period of operation he found it necessary to dissemble the boiler to replace a broken thermocouple and he observed a thin scale on the heating surface. The character of the heating surface had changed in spite of all his precautions. When the tube was removed again during a reconditioning of the apparatus for this investigation, a thin greenish scale was observed on the surface. It was suspected that scale formation had been the cause of the trouble Walker experienced in attempting to obtain consistent data and for this reason considerable time was devoted to making changes in the apparatus which would facilitate frequent cleanings of the boiler and heating tube.

The heating tube was cleaned on both sides prior to each of the first four runs and the data were consistent as is evidenced by Figure III. The boiler was not shut down after run 4 but allowed to run overnight. Atmospheric run 5 was made on the following day and the points obtained checked those of the first four runs within 10% (Figure III). It was then thought that good results might not require a cleaning of the tube before each run.if the boiling were maintained between runs. Therefore, boiling was maintained between runs 8,9, and 10. The four points obtained in run 10 are shown in Figure III and are connected by a dotted line. These points, strangely enough, represent an approximate increase of 50% in heat flux. An examination of the heating tube revealed a thin, brownish scale which proved that foreign material may deposit on a heating surface despite the violent agitation provided by rising vapor bubbles. Akin[1] experienced the same phenomenon with a similar apparatus. He noticed that a scale formed on the heating tube if water were allowed to stand in the boiler for any length of time. A run made to determine the effect of the scale resulted in extremely high coefficients. This phenomenon might be the result of increased wetting of the heating surface due to the chemical nature of the scale. It is a well known fact that increased wetting of a heating surface is accompanied by smaller bubbles and correspondingly higher heat fluxes.

Runs 18,19, and 20 were made to determine, if possible, the effect of scale formation over a longer period of time. The boiling was continued at the conclusion of run 17 and runs 18-20 were made at intervals of two days. The points obtained in these runs are plotted in Figure IV against the standard atmospheric curve. The maximum deviation is seen to be less than 15%. The heating tube was examined at the conclusion of run 20 and found to be perfectly clean. It is felt that the scale formation in earlier runs was the result of dirt from the condenser which gradually worked down into the boiler. All of the atmospheric points including vacuum check points are shown in Figures III and IV. All of these points, with the exception of those obtained in run 10, are consistent, the maximum deviation from the curve being less than 15%. It is concluded that for a given Δt (tube wall to boiling liquid), the heat flux obtained with a clean tube is reproducible within ±15%, and, that for values of Δt ranging from 12 to 30°F., a slight fouling of the surface may increase the heat flux 40% above that obtained for the clean tube.

Figures V to IX provide a comparison of the curves obtained in this ivestigation with those obtained by Sherman - Kaulakis[8] and Walker[9]. The atmospheric curve agrees very well with that obtained by Sherman - Kaulakis with a Ni-Pl. copper tube. The curves deviate from each other to the right of the hump and it is seen that this is also a characteristic of the curves obtained with vacuum. The curves obtained by Sherman - Kaulakis are lower than those of the present investigator without exception. The best agreement is found between the atmospheric and 170°F. curves. Walkers curves are always lowest. This is undoubtedly because he failed to clean the heating surface. The scale which continually accumulated acted as a resistance to heat transfer and reduced the flux. The Sherman - Kaulakis and Walker data for water boiling at 130°F. agree very well as is seen in Figure IX.

Figure X is a composite of the authors data presented in Figures V to IX. In agreement with previous work these results show that in general the heat flux at any given temperature difference is lowered as the pressure on the boiling liquid is decreased, but that the critical temperature difference, corresponding to the point of maximum flux, is in all cases, approximately the same at a value of about 45°F. This value agrees with that reported by many other investigators. Heat flux is lowered roughly 20% as the boiling point is decreased from 212 to 190°F., 40% from 212 to 170°F., 50% from 212 to 130°F., and 65% from 212 to 110°F. It must be remembered that these percentages are only approximate and apply only to heat flux as determined in this ivestigation. The curves are all straight lines to the left of the hump. The slopes of the 212, 190, and 170°F. curves are about equal being 2.48, 2.55, and 2.52 respectively. The slopes of the 150, 130, and 110°F. curves are 1.77, 2.19 and 2.00 respectively. It is noticed that the 150° curve crosses the 170 and 190° curves. This unreasonable and not easily explained. The original data yield no source of error and as consistent check points were obtained upon three different occasions (see Figure VIII) it is felt that this condition may actually exist. As the boiling point of water changes, physical properties such as thermal conductivity, viscosity, density, etc. also change and it is possible that heat flux may increase with decreasing pressure in the vicinity of 150°F. The 130° curve also has a tendency to cross the other curves. Refering to Figure VIII we see that the slope of the 150° curve obtained by Sherman and Kaulakis is even less than the slope of the curve obtained by the present investigator while the slope of Walker's curve is about the same.

Maximum heat flux may be correlated with boiling temperature by plotting the former against the latter on semi-log paper as shown in Figure XI. The equation of the straight line through the points is:

$$\text{Log } (q/A_o)_{max} = .0038\ T - 4.76$$

where T is expressed in degrees F. and heat flux as B.t.u./(hr.)(sq.ft.)(. An attempt to correlate maximum heat flux with absolute pressure as done by Walker and Insigner - Bliss was unsuccessful. A correlation with viscosity was also unsuccessful.

As the slopes of the curves shown in Figure X vary widely, it is useless to attempt a correlation of heat transfer with boiling temperature by an equation of the type proposed by Cryder and Finalborgo[4], which is in the form:

$$\text{Log } h/h_n = b(t-t_n)$$

where h and h_n are coefficients of heat transfer at temperatures t and t_n, where t_n is the boiling point at atmospheric pressure, and b is a constant.

Overall coefficients are plotted against overall temperature drop in Figure XIII. The shape and location of the curves are consistent with the data as shown in Figure X leaving no doubts as to the reliability of the thermocouple readings.

Benzyl mercaptan was used as a promoter in the first few practice runs and did not produce a uniform steam side coefficient as was evidenced by thermocouple readings which varied widely. Octyl thiocyanate was substituted and found to be much more satisfactory. In obtaining points to the left of the hump thermocouple readings were always within one or two degrees of each other when this promoter was used. In the vicinity of the hump thermocouple readings were subject to sudden and large fluctuations. For this reason points could not be determined accurately in the vicinity of the critical temperature.

No serious trouble was experienced while running steam through the heating tube under vacuum, and no appreciable pressure drop was encountered until the condensing steam temperature reached 140-150°F. Even at this temperature, the largest temperature drop observed was 8°F.

The steam side coefficients obtained were very high, ranging from 10,000 to 100,000 B.t.u./(hr.)(sq. ft.)(°F.). The corresponding temperature drops ~~from~~

from steam to tube wall were so low (in most cases 1 to 5°F.) that these coefficients, as calculated, are approximate.

Heat losses from the boiler were determined by Walker for water boiling at 212°F. This was accomplished by using an electrical coil heater in place of the regular heating tube, measuring heat input by the wattage in the heater andoutput in the usual manner by the heat removed by the condenser. The difference between these values was taken as the heat loss. At low fluxes the losses were less than 5% of the total flux. As the losses would even be less for higher fluxes and lower boiling temperatures (well within the limits of experimental error) heat losses were neglected in all calculations by the author.

Three methods of plotting the data are shown in Figures XIII, XIV, and XV. The data have been plotted as q/A versus Δt, h versus Δt, and h versus q/A respectively. Since by definition h equals $q/(A)(\Delta t)$, the second method involves a plot of $q/A(\Delta t)$ versus Δt, and the third $q/A(\Delta t)$ versus q/A. The first method involves a direct plot of the resulting flux, q/A, and, since it cannot distort the basic results in comparing the data of different observers, it has been used in making up the plots shown under results.

In comparing the three plots it would seem offhand as though h versus q/A offers the best method of correlating the data and q/A versus Δt the next best. Actually, any one of the three methods gives the same result. For purposes of illustration assume that h is related to Δt by an equation of the type

$$h = a\Delta^{n} \quad (\text{ since the curve is a straight line })$$

but, $\bar{q} = h\Delta$ and $\Delta = \bar{q}/h$

therefore, $\bar{q} = a\Delta^{n+1}$

also $q = a\dfrac{q^{n+1}}{h^{n+1}}$

Rearranging the above equation

$$h = a^{\frac{1}{n+1}}\ q^{\frac{n}{n+1}}$$

In other words, if the slope of h versus Δt is n, the slope of q/A versus Δt will be n+1 and the slope of h versus q/A will be n/n+1 . From Figure XIV the slope of h versus Δt is 1.52. Therefore, if the other curves have been drawn correctly their slopes should be 2.52 and 1.52/2.52 or .605, respectively. By measurement they are 2.48 and .610 . Any ordinate of the h versus Δt curve yields q/A if multiplied by the absissa. Therefore, %deviations should be the same in either case. The fact that the q/A versus Δt looks better is merely an optical illusion.

A few pictures of boiling water at atmospheric pressure were taken using a high speed technique. These did not turn out very well and time did not permit another attempt. A set of prints are included in the library copy of the thesis.

VI. CONCLUSIONS

The following conclusions are based on the boiling of distilled water outside a single, submerged, horizontal tube. (chromium-plated copper)

1.) For a given Δt (tube wall to boiling liquid), the heat flux obtained with a clean tube is reproducible within $\pm 15\%$.

2.) For values of Δt ranging from 12 to 30°F., a slight fouling of the surface increased the heat flux 40% above that obtained for the clean tube. This agrees quantitatively with a similar finding by Akin[1].

3.) For values of Δt ranging from 13 to 35°F., the heat flux varies approximately as the 2-2.5 power of Δt, depending on the boiling temperature.

4.) The maximum flux occurs at a Δt of 45°F. for all boiling temperatures used (110 to $\overset{2}{1}12^{\circ}$F.), and is an exponential function of the boiling temperatures rather than of the absolute pressure or viscosity of the boiling liquid alone.

5.) For a given Δt over the range of 45 to 150°F., the coefficients and also heat flux decrease with a decrease in the boiling temperature.

6.) Using octyl thiocyanate to promote the inside copper surface, very high steam side coefficients were obtained. The side surface temperatures of the tube wall were practically the same at the three points as shown in Figure XVII.

VI. RECOMMENDATIONS

It is recommended that:

1.) The investigation of heat transfer to boiling liquids be continued using liquids other than water. These liquids should be chosen carefully in order that the separate effects of factors controlling the heat transfer such as viscosity, surface tension, thermal conductivity, etc. may be determined.

2.) The position of the curve (heat flux versus temperature drop from tube to boiling liquid) for water boiling at 150°F. be checked.

3.) Octyl thiocyanate be used as a steam promoter when condensing steam on copper.

VIII. APPENDIX

A. DETAILS OF BOILER CONSTRUCTION

A diagram of the boiler showing the details of construction is presented in Figure II. The heating tube is brazed into one end of the boiler and passes through a packing gland at the other. The pyrex glass windows are held in place by large brass fittings, well gasketed, and therefore offer little chance for air leakage. Thermocouples from the tube wall are brought through small holes in one end of the boiler and are soldered into place. The end of the boiler to which the heating tube is brazed is removable from the rest of the boiler, being held in position by two large flanges securely fastened with heavy bolts. Asbestos rope was used in the packing gland.

As it was necessary to remove the heating tube frequently for cleaning,it was impossible to cover the removable end of the boiler with permanent insulation. A layer of magnesia-asbestos insulation was molded over the removable end which had previously been covered with vaseline and allowed to dry. This layer was then pried from the boiler in one piece, reinforced with adhesive tape and removed thereafter as often as the tube was cleaned.

FIGURE II.

DIAGRAM OF BOILER

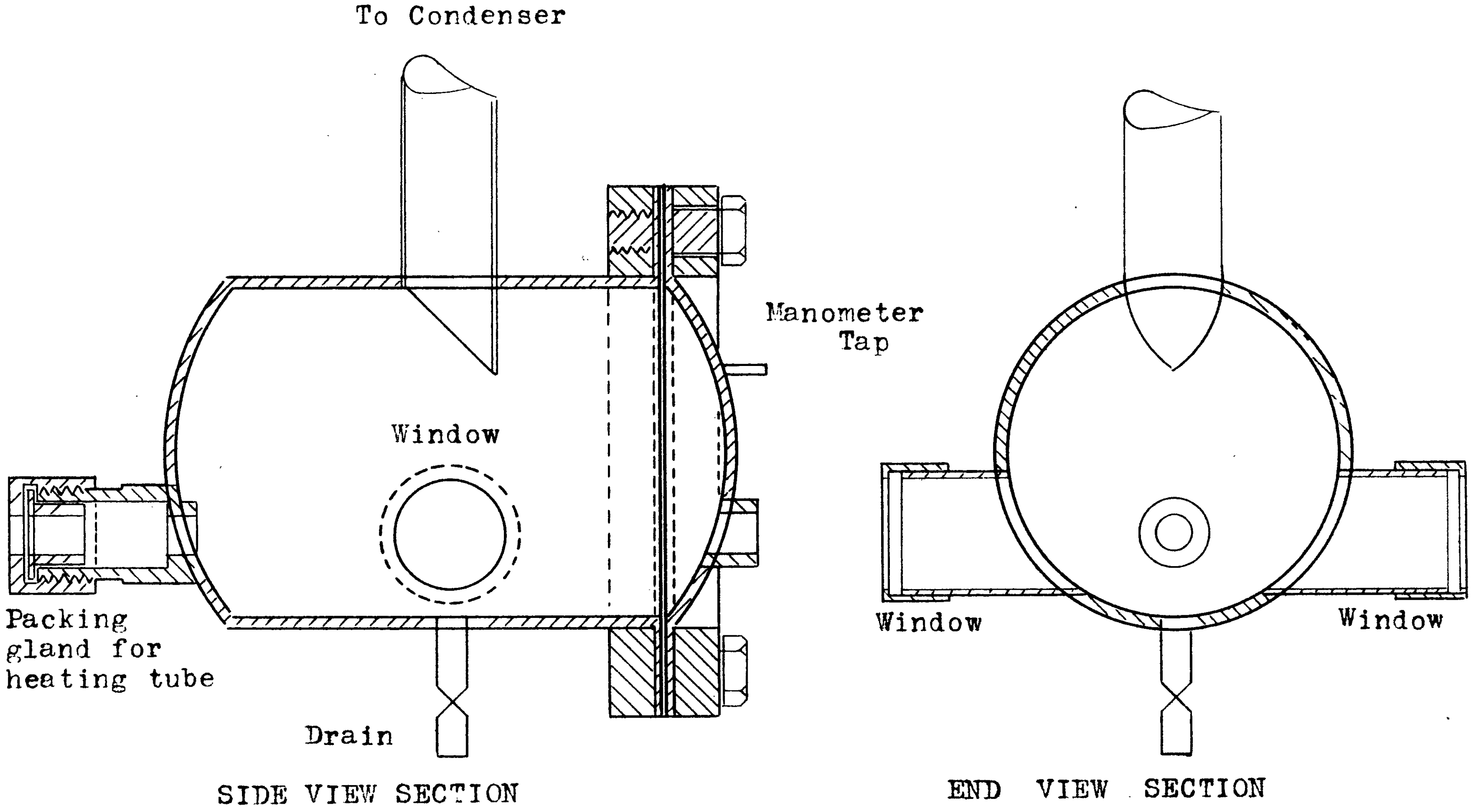

CKW 3-19-40

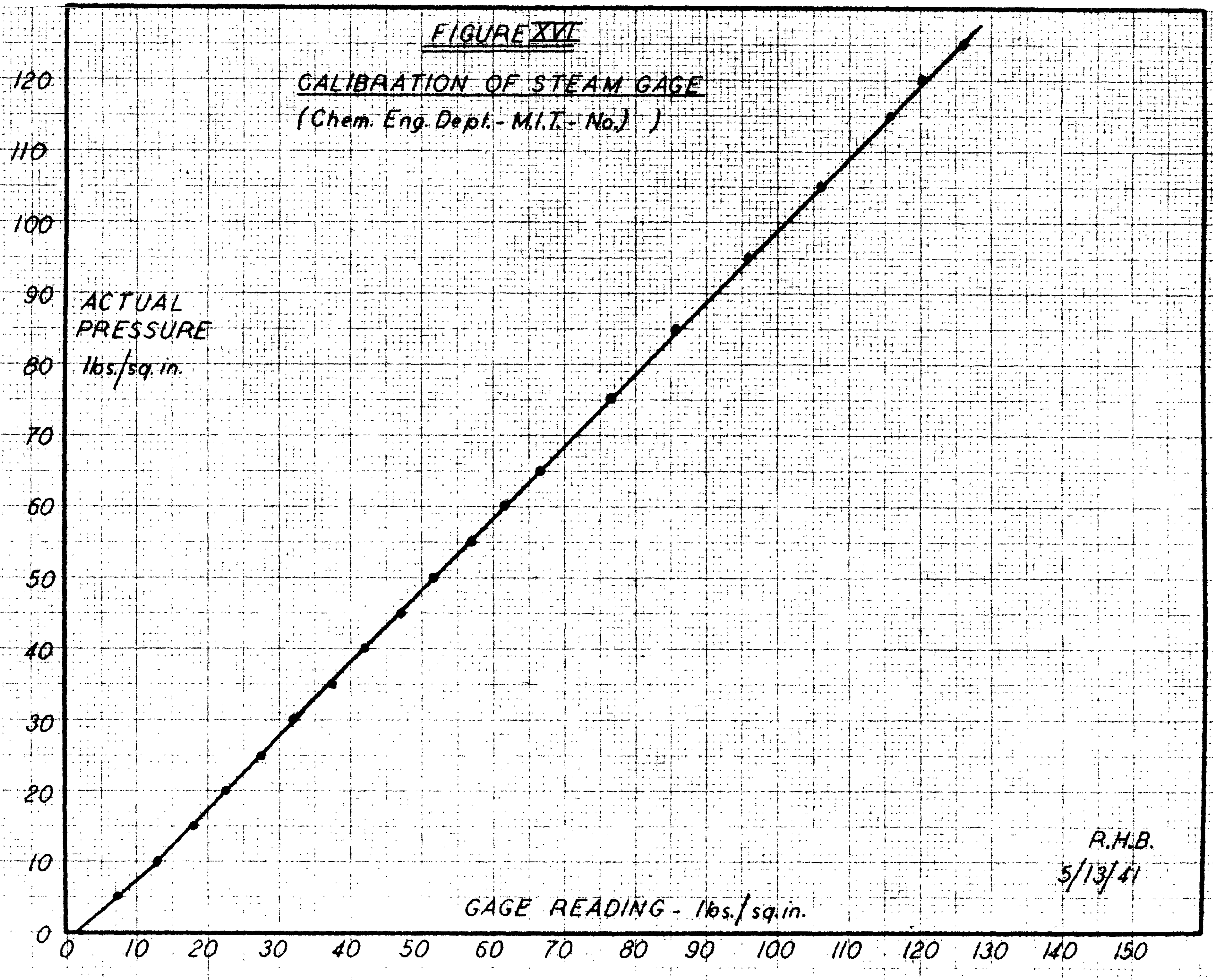

FIGURE XVI

CALIBRATION OF STEAM GAGE

(Chem. Eng. Dept. - M.I.T. - No.   )

R.H.B.
5/13/41

B. THERMOCOUPLE INSTALLATION

Investigators have used many different thermocouple installations in obtaining surface coefficients of heat transfer to boiling liquids. The surface temperature of a heating tube at any point is measured by placing the hot junction of a thermocouple directly under the surface. This is accomplished by soldering the junction in a slot (milled lengthwise along the tube or around the circumference) or in a chordal hole (drilled tangentially to a circle between the inner and outer walls of the tube). The leads from the junction are taken from the same or opposite sides of the slot or chordal hole and are properly insulated from each other.

A technique applicable to short tubes with thick walls is described by Insigner and Bliss[6]. A hole is drilled in the pipe wall lengthwise to the pipe. A wire of 1/16 inch diameter is filed down to a smaller size except for a short knob left on one end. A hole is drilled into this knob, and the other lead of the thermocouple is soldered into the hole, the two leads being insulated from each other along their length . The couple is then used as a traveling thermocouple being placed in different positions along the tube inches, the couple then being soldered into a chordal hole in the pipe.

When Walker's apparatus was tested the thermocouples were found to be shorted and it was decided to replace them. A great deal of trouble was encountered in bending the assembled couples without breaking the glass capillary and consequently causing short circuits. This difficulty was circumvented by insulating the constantan wire from the copper capillary with a coating of Insalute cement over a water glass base. Number 35 constantan wire was used as #36 was not available. The wire was first stripped of silk and enamel and coated with water glass by means of a wet folded cloth. This coating dried quickly and was followed by a coating of Insalute cement applied in a similar manner. The cement was allowed to dry for twenty four hours at the end of which time another coat of water glass was added to insure complete insulation. The insulated wire was threaded inside the copper capillary tubing and the hot junction made with soft solder. The couples were then soft soldered in the chordal holes. A few test runs on the boiler indicated extremely low tube wall temperatures corresponding to relatively high steam temperatures. Rapid dissipation of heat from the hot junctions via the copper capillary seemed to be the logical explanation for this condition. Therefore, the couples were removed from the chordal holes and soldered in two inch slots milled lengthwise in the surface of the heating tube to effect greater immersion. The solder was filed level with the tube surface and polished with steel wool and fine emery cloth. Details of this installation and the arrangement of the thermocouples are shown in Figure XVII.

Figure XVIII is a plot of the thermocouple calibration obtained by comparing e.m.f. readings on a potentiometer with a calibrated thermometer when both thermometer and thermocouple were in an oil bath. (the hot junction of the thermocouple was fastened to the bulb of the thermometer) This plot was checked by running steam through the heating tube when the boiler was empty and assuming the tube wall temperature to be that of the steam.

FIGURE XVII

DETAILS OF THERMOCOUPLE INSTALLATION

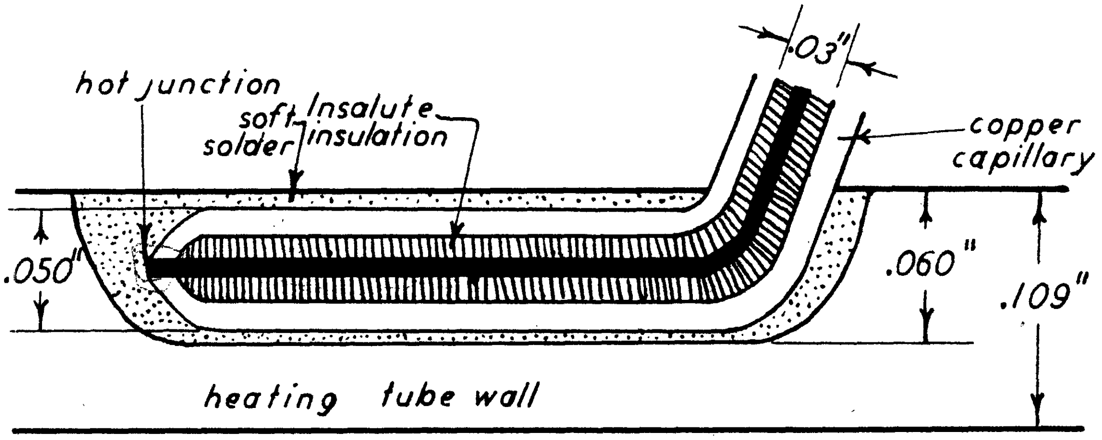

need flat covering

CROSS SECTION OF TUBE WALL AND INSTALLED THERMOCOUPLE

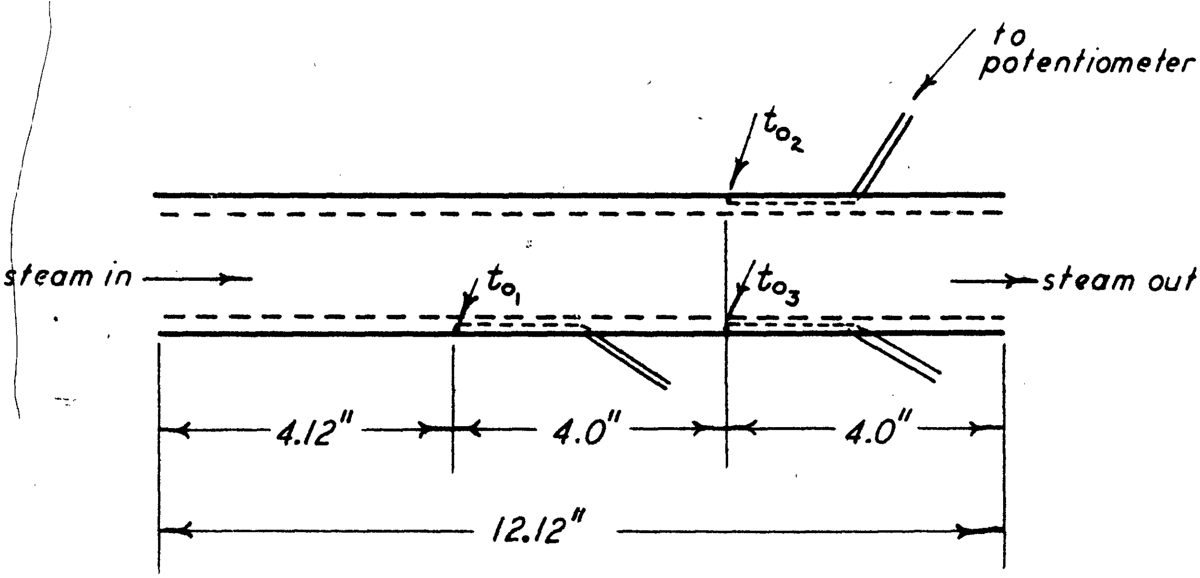

TOP VIEW OF HEATING TUBE SHOWING LOCATION OF THERMOCOUPLES

R.H.B.
5/11/41

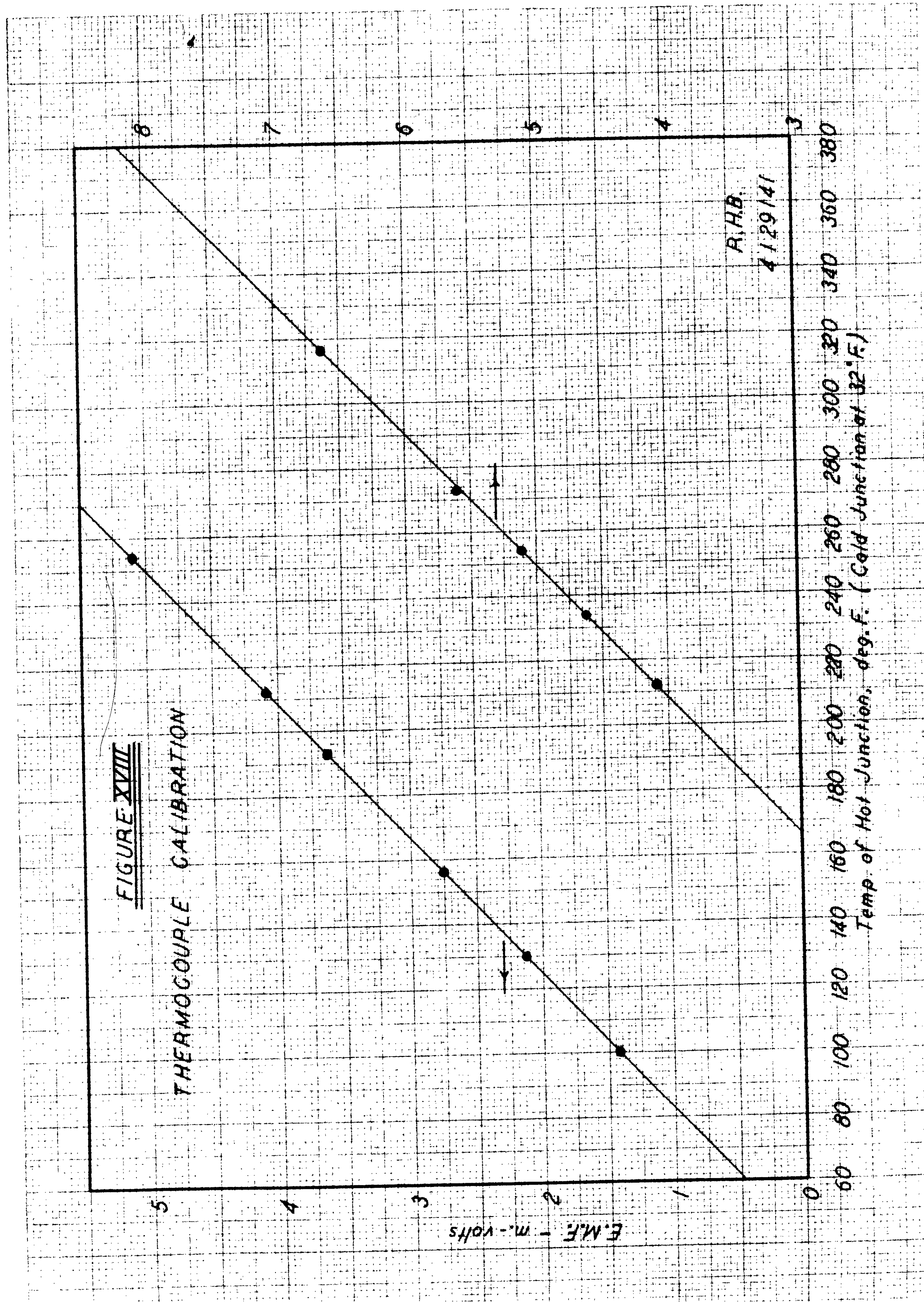

FIGURE XVIII

THERMOCOUPLE CALIBRATION

C. NOMENCLATURE

A_i	Inside area of heating tube - sq.ft.
A_o	Outside area of heating tube - sq.ft.
h_i	Steam side coefficient of heat transfer - B.t.u./(hr.)(sq.ft.)($^{\circ}$F.)
h_o	Water side coefficient of heat transfer - B.t.u./(hr.)(sq.ft.)($^{\circ}$F.)
P	Absolute steam pressure corrected from gage calibration - lbs./sq.in.
q	Total heat transfer - B.t.u./hr.
$\bar{q}$	Heat flux - B.t.u./(hr.)(sq.ft.)
$T_{c.w._1}$	Temperature of inlet cooling water - $^{\circ}$C.
$T_{c.w._2}$	Temperature of exit cooling water - $^{\circ}$C.
$\Delta T_{c.w.}$	Temperature rise of cooling water - $^{\circ}$F.
t_L	Temperatureoof boiling water - $^{\circ}$F.
t_{o_1}, t_{o_2} & t_{o_3}	Thermocouple tube wall temperatures (see Figure XVII) - $^{\circ}$F.
Δt_o	Temperature drop from tube wall to boiling liquid (referred to as t in the main body of this report) - $^{\circ}$F.
Δt_w	Temperature drop through the tube wall -$^{\circ}$F.
Δt_i	Temperature drop from steam to tube wall - $^{\circ}$F.
ΔT_{over}	Temperature drop from steam to boiling liquid -$^{\circ}$F.
T_{s_1}	Inlet steam temperature - $^{\circ}$F.
T_{s_2}	Exit steam temperature - $^{\circ}$F.

U_o	Overall coefficient of heat transfer - B.t.u./(hr.)(sq.ft.)(°F.)
Vac.	Vacuum on the boiler - cms. of Hg.
W	Cooling water rate - lbs./hr,

The following symbols are used under "REMARKS" in Table I.

●	Tube cleaned inside and outside prior to the run.
▲	Fresh distilled water put in the boiler.
■	Steam well promoted with octyl thiocyanate.

D. SAMPLE CALCULATIONS

Calculations for an atmospheric check point from run 7.

Data (see pg.49 for nomenclature)

$P = 27.7$ lbs./sq.in. $T_{c.w.} = 75^\circ$F.

T_p =- 246°F.(steam tables) $W = 305$ lbs./hr.

$t_L = 212^\circ$F. $A_o = .222$ sq.ft.

t_o(ave.) $= 233.5^\circ$F. $A_i = .165$ sq.ft.

Heat removed by the condenser

$$q = 305 \times 75 = 22{,}900 \text{ B.t.u./hr.}$$

Heat flux

$$q/A_o = 22{,}900/.222 = 103{,}000 \text{ B.t.u./(hr.)(sq.ft.)}$$

$$q/A_i = 103{,}000 \times .222/.165 = 139{,}000 \quad " \quad "$$

Overall temperature drop

$$\Delta T_{over} = 246 - 212 = 34^\circ F.$$

Temperature drop from tube wall to boiling liquid

$$\Delta t_o = 233.5 - 212 = 21.5^\circ F.$$

Temperature drop through the tube wall

$$\Delta t_w = \frac{q/A_o}{\frac{k \text{ Aave.}}{L \; A_o}} = \frac{q/A_o}{21{,}050} = \frac{103{,}000}{21{,}050} = 4.9^\circ F.$$

Temperature drop from tube wall to steam

$$\Delta t_i = 34 - (21.5 + 4.9) = 7.6^\circ F.$$

Water side coefficient

$$h_o = \frac{q/A_o}{\Delta t_o} = \frac{103{,}000}{21.5} = 4{,}790 \text{ B.t.u./(hr.)(sq.ft.)(}^\circ\text{F.)}$$

Steam side coefficient

$$h_i = \frac{q/A_i}{\Delta t_i} = \frac{139,000}{7.6} = 18,300 \text{ B.t.u./(hr.)(sq.ft.)(}^{\circ}\text{F.)}$$

Overall coefficient

$$U_o = \frac{q/A_o}{\Delta T_{over}} = 3030 \text{ B.t.u./(hr.)(sq.ft.)(}^{\circ}\text{F.)}$$

DD. SUMMARY OF DATA AND CALCULATIONS

SUMMARY OF ORIGINAL DATA
AND CALCULATIONS

TA

RUN	P	T_p	Vac.	T_{s_1}	T_{s_2}	t_L	t_{o_1}	t_{o_2}	t_{o_3}	Δt_o	$T_{c.w._1}$	$T_{c.w._2}$	$\Delta T_{c.w.}$	W	q
I			0	250	244	212	233	233	233	21	9.2	54.5	82	252	93
			0	266	259	212	240	240	240	28	9.0	52.3	78	558	19
			0	280	274	212	249	239	239	32	8.7	68.5	108	578	2
II	77.7	310	0	305	305	212	279	279	279	67	10.0	56.0	83	817	30
	69.7	302.5	0	300	299	212	265	264	264	52.5	10.0	59.2	88	902	3
	43.7	272.5	0	270	268	212	247	246	246	34.5	10.0	65.3	100	620	2
	32.7	255.5	0	255	252	212	239	239	239	27.0	10.0	73.0	113	308	15
	26.7	244	0	242	241	212	232	232	232	20.0	11.0	45.7	62.4	289	8
III	34.7	259	0	257	254	212	240	240	240	28	15.5	59.6	79.5	566	20
	57.7	290	0	288	288	212	257	254	254	43.5	12.8	57.0	80	1132	40
	113.7	337	0	332	332	212	331	328	328	117.5	16.2	54.5	70	322	10
	139.7	353	0	348	348	212	348	346	346	135	17.5	48.0	55	322	7
	154.7	361	0	354	354	212	357	355	355	144	17.5	46.2	52	317	7
	103.7	330.5	0	325	325	212	323	321	321	110	18.0	56.2	69	314	9
	92.7	322.5	0	318	318	212	316	316	316	104	18.0	58.5	73	317	10
IV	20.7	230	0	225	225	212	224.5	224.5	224.5	12.5	23.2	41.2	32.5	172	2
	24.7	239.5	0	238	238	212	230.5	230.5	230.5	18.5	22.0	60.0	69	240	7
	29.7	250	0	245	245	212	236	236	236	24	19.7	59.5	72.5	422	13
	37.2	263	0	258	258	212	242	240	240	29	17.0	63.5	84	619	2
	51.7	283	0	280	280	212	251	244	244	35.5	15.7	67.5	93	882	3
	65.7	298.5	0	294	294	212	286	274	274	68	15.0	57.0	76	882	3
	82.7	314.5	0	310	310	212	310	296	296	91	17.5	53.0	64	496	14
	40.7	268.5	0	264	264	212	245	245	245	33	14.2	57.6	78	835	2
	80.7	312.5	0	308	308	212	306	290	290	86	16.5	58.0	75.5	436	14
	47.2	297.5	0	272	272	212	249	249	249	37	14.7	62.7	86.5	882	3
	29.7	250	0	248	248	212	236.5	236.5	236.5	24.5	17.8	69.2	93	328	13
V	28.7	248	0	246	246	212	235	235	235	23	17.0	48.5	57	408	10
	35.2	259.5	0	257	257	212	240	240	240	28	15.5	53.0	68	673	20
	44.7	274	0	271	271	212	247	244	244	33.5	15.0	56.2	74.5	923	3
	49.7	280.5	0	278	278	212	251	249	249	38	15.0	58.2	78	1017	3
	62.7	295.5	0	293	293	212	278	259	259	58	15.0	52.2	67.5	1017	3
VI	15.7	216	27	218.5	218.5	190	210	210	210	20	14.5	47.0	59	228	6
VII	36.2	261	0	258	258	212	241.5	240	240	29	16.0	63.0	84.5	634	2
	27.7	246	0	243	243	212	234	233	233	21.5	17.2	58.5	75	305	1
	18.2	223	27.2	222	222	190	213	213	213	23	14.0	48.5	62	307	9
	23.7	237.5	27.0	236	236	190	220	220	220	30	13.7	53.2	72	536	17
	29.7	250	27.0	248	248	190	229	229	229	39	13.2	41.5	51.5	1148	26
	33.2	256.5	27.2	255	255	190	232	230	230	41	13.2	46.2	60	1166	3

TABLE I (see pg.49 for nomenclature)

W	q/A_o	ΔTover	Δt_w	Δt_i	q/A_i	h_o	h_i	U_o	REMARKS
52	93,200	35	4.4	9.6	126,000	4420	13,130	2660	4/8/41, 4-11 P.M.
58	196,300	50.5	9.3	13.2	265,000	7010	20,000	3880	● ▲ ■
78	281,000	65	13.3	19.7	380,000	8,800	19,300	4320	
317	305,000	98	14.5	16.5	412,000	4550	24,900	3110	4/13/41 12-6 P.M.
902	357,000	90.5	17.0	21	482,000	6800	22,900	3940	● ▲ ■
20	280,000	60.5	13.3	12.7	378,000	8120	29,700	4620	
08	156,000	43.5	7.4	9.1	212,000	5800	23,300	3590	
289	81,300	32	3.8	8.2	110,000	4740	13,400	2540	
566	202,000	47	9.6	9.4	273,000	7220	29,100	4300	4/17/41, 2-7 P.M.
132	407,500	78	19.4	15	551,000	9380	36,700	5220	● ▲ ■
322	101,300	125	4.8	2.7	137,000	863	50,700	812	
322	79,700	141	3.8	2.2	107,500	589	48,600	565	
317	74,200	149	3.5	1.5	100,000	515	66,600	497	
314	97,700	118.5	4.6	3.9	132,000	888	33,900	824	
317	104,000	110.5	4.9	1.6	141,000	1000	88,200	942	
172	25,200	18	1.2	4.3	34,100	2015	7930	1400	4/21/41, 1-11 P.M.
240	74,700	27.5	3.5	5.5	101,000	4030	18,400	2710	● ▲ ■
422	138,000	38	6.5	7.5	186,000	5760	24,800	3630	
619	234,000	51	11	11	316,000	8070	28,700	4580	
882	369,000	71	17.6	18	498,000	10,370	27,700	5190	
882	301,000	86.5	14.3	4.2	407,000	4420	97,000	3480	
496	143,000	102.5	6.8	4.7	193,000	1570	41,000	1395	
835	293,000	56.5	13.9	9.6	396,000	8870	41,200	5180	
436	148,000	100.5	7	7.5	200,000	1720	26,700	1480	
882	343,000	65	16.3	11.7	463,000	9270	39,600	5270	
328	137,200	38	6.5	7	185,000	5560	26,400	3610	
408	105,000	36	5	8	142,000	4570	17,800	2920	4/22/41, 8-12 A.M.
673	206,500	47.5	9.8	9.7	278,000	7375	28,600	4340	■
923	310,000	62	14.7	13.8	418,000	9250	30,300	5000	Boiler running
1017	357,000	68.5	17	13.5	482,000	9380	35,700	5220	since 11 P.M.
1017	309,000	83.5	14.7	10.8	417,000	5330	38,600	3710	4/21/41
228	60,300	28.5	2.8	5.7	81,600	3015	14,300	2100	4/22/41, 1-2 P.M.
634	241,000	49	11.5	8.5	326,000	8320	38,300	4920	4/24/41,
305	103,000	34	4.9	7.6	139,000	4790	18,300	3030	8 A.M. - 7 P.M.
307	84,700	33	4	6	114,000	3680	19,000	2560	● ▲ ■
536	173,500	47.5	8.3	9.2	234,000	5780	25,400	3650	
1148	266,300	60	12.6	8.4	360,000	6830	42,800	4930	
1166	315,000	66.5	15	10.5	426,000	7680	40,600	4740	
477	169,500	84	8	6	229,000	1695	38,200	2020	
1332	276,000	69.5	13.1	8.4	373,000	5750	44,300	3970	

	[illegible]	[illegible]	0	[illegible]	[illegible]	[illegible]	[illegible]	[illegible]	[illegible]	[illegible]	[illegible]	[illegible]	[illegible]	[illegible]	[illegible]
	51.7	283	0	280	280	212	251	244	244	35.5	15.7	67.5	93	882	369,
	65.7	298.5	0	294	294	212	286	274	274	68	15.0	57.0	76	882	301,
	82.7	314.5	0	310	310	212	310	296	296	91	17.5	53.0	64	496	143,
	40.7	268.5	0	264	264	212	245	245	245	33	14.2	57.6	78	835	293
	80.7	312.5	0	308	308	212	306	290	290	86	16.5	58.0	75.5	436	148
	47.2	277.5	0	272	272	212	249	249	249	37	14.7	62.7	86.5	882	343
	29.7	250	0	248	248	212	236.5	236.5	236.5	24.5	17.8	69.2	93	328	137,
V	28.7	248	0	246	246	212	235	235	235	23	17.0	48.5	57	408	105,
	35.2	259.5	0	257	257	212	240	240	240	28	15.5	53.0	68	673	206,
	44.7	274	0	271	271	212	247	244	244	33.5	15.0	56.2	74.5	923	310,
	49.7	280.5	0	278	278	212	251	249	249	38	15.0	58.2	78	1017	357,
	62.7	295.5	0	293	293	212	278	259	259	58	15.0	52.2	67.5	1017	309
VI	15.7	216	27	218.5	218.5	190	210	210	210	20	14.5	47.0	59	228	60,
VII	36.2	261	0	258	258	212	241.5	240	240	29	16.0	63.0	84.5	634	241,
	27.7	246	0	243	243	212	234	233	233	21.5	17.2	58.5	75	305	103
	18.2	223	27.2	222	222	190	213	213	213	23	14.0	48.5	62	307	94
	23.7	237.5	27.0	236	236	190	220	220	220	30	13.7	53.2	72	536	173,
	29.7	250	27.0	248	248	190	229	229	229	39	13.2	41.5	51.5	1148	266,
	33.2	256.5	27.2	255	255	190	232	230	230	41	13.2	46.2	60	1166	315
	44.7	274	27.2	270	270	190	266	254	254	70	14.0	58.0	79	477	169,
	35.2	259.5	27.3	256	256	190	245	233	233	48	13.2	38.5	46	1332	276
	62.7	295.5	27.2	294	294	190	290	290	290	100	14.0	31.4	31	620	86,
	117.7	339.5	27.0	336	336	190	339	339	339	149	15.2	52.0	67.5	191	58,
	95.2	324.5	27.0	320	320	190	319	319	319	129	14.5	40.5	47	311	65,
	29.7	250	27.0	248	248	190	225	224	224	34.5	13.5	45.0	57	1030	264
	17.2	220	27.0	220	220	190	212	212	212	22	13.8	36.0	40	451	81,
VIII	28.7	248	0	246	246	212	238	236	236	25	15.5	51.8	65.3	446	131,
	35.2	259.5	0	257	257	212	243	242	242	30.5	15.8	47.5	57	796	204
	15.2	214	45.5	214	214	170	200	200	200	30	13.8	29.8	28.5	1168	150
	19.7	227.5	45.5	226	226	170	207	207	207	37	13.8	31.5	32	1523	219,
	26.7	244	45.5	240	240	170	231.5	219	219	55.2	13.8	36.0	40	1089	196
X	21.2	231	0	226	226	212	224.5	223	223	11.8	17.5	46.5	52.5	138	32,
	29.7	250	0	248	248	212	236	235	235	23.5	14.8	47.3	59	752	200,
	36.2	260.5	0	258	258	212	243.5	240	240	29.8	15.0	57.0	76	926	316,
	24.7	239.5	0	236	236	212	229.5	229.5	229.5	17.5	16.4	39.3	41.5	496	92,
														578	
XI	29.7	250	0	248	248	212	237.5	236	236	24.8	16.5	48.0	57	578	149,
			45.5	192	192	170	187	187	187	17	13.2	30.0	30.5	233	32
			45.5	204	204	170	194	194	194	24	13.0	34.5	38.5	417	72
			45.5	202	202	170	191.5	191.5	191.5	21.5	13.0	31.5	33.5	405	61,
			45.5	212	212	170	200	200	200	30	12.8	31.2	33.2	782	118,
			45.5	219	219	170	204	204	204	34	13.0	38.5	46.0	745	154
			45.5	178	178	150	169	169	169	19	13.2	33.0	33.5	292	47,
			57.5	188	188	150	176	176	176	26	13.0	30.8	32	606	87,

82	369,000	71	17.6	18	498,000	10,370	27,700	5190	
82	301,000	86.5	14.3	4.2	407,000	4420	97,000	3480	
96	143,000	102.5	6.8	4.7	193,000	1570	41,000	1395	
35	293,000	56.5	13.9	9.6	396,000	8870	41,200	5180	
36	148,000	100.5	7	7.5	200,000	1720	26,700	1480	
82	343,000	65	16.3	11.7	463,000	9270	39,600	5270	
28	137,200	38	6.5	7	185,000	5560	26,400	3610	
08	105,000	36	5	8	142,000	4570	17,800	2920	4/22/41, 8-12 A.M.
73	206,500	47.5	9.8	9.7	278,000	7375	28,600	4340	■
23	310,000	62	14.7	13.8	418,000	9250	30,300	5000	Boiler running
17	357,000	68.5	17	13.5	482,000	9380	35,700	5220	since 11 P.M.
17	309,000	83.5	14.7	10.8	417,000	5330	38,600	3710	4/21/41
28	60,300	28.5	2.8	5.7	81,600	3015	14,300	2100	4/22/41, 1-2 P.M.
34	241,000	49	11.5	8.5	326,000	8320	38,300	4920	4/24/41,
05	103,000	34	4.9	7.6	139,000	4790	18,300	3030	8 A.M. - 7 P.M.
07	84,700	33	4	6	114,000	3680	19,000	2560	● ▲ ■
36	173,500	47.5	8.3	9.2	234,000	5780	25,400	3650	
48	266,300	60	12.6	8.4	360,000	6830	42,800	4430	
66	315,000	66.5	15	10.5	426,000	7680	40,600	4740	
77	169,500	84	8	6	229,000	1695	38,200	2020	
332	276,000	69.5	13.1	8.4	373,000	5750	44,300	3970	
20	86,700	105.5	4.1	1.4	117,000	867	83,700	821	
191	58,100	149.5	2.8		78,500	390		388	
511	65,800	134.5	3.1	2.4	89,000	511	37,000	489	
30	264,500	60	12.5	13	357,000	7670	27,400	4410	
51	81,250	30	3.9	4.1	110,000	3690	26,800	2700	
46	131,300	36	5.3	5.7	177,000	5250	31,000	3650	4/26/41, 12-4 P.M.
96	204,500	47.5	9.7	7.3	276,000	6710	37,800	4310	● ▲ ■
68	150,000	44	7.1	6.9	203,000	5000	29,400	3410	
523	219,000	57.5	10.4	10.1	296,000	5930	29,300	3810	
89	196,000	74	9.3	9.5	265,000	3550	27,900	2650	
38	32,700	19	1.6	5.6	44,200	2780	7890	1720	4/28/41, 12-3 P.M.
52	200,000	38	9.5	5.0	270,000	8510	54,000	5260	■ - Boiler running
126	316,600	48.5	15	3.7	427,000	10,650	115,000	6530	since 4 P.M. 4/26/41
96	92,700	27.5	4.4	5.6	125,000	5,280	22,300	3370	
78									
78	149,000	38	7.1	5.9	201,000	6030	34,100	3920	4/29/41,
33	32,100	22	1.5	3.5	43,300	1893	12,400	1460	9 A.M. - 11 P.M.
17	72,500	34	3.4	6.6	98,000	3020	14,800	2130	● ▲ ■
05	61,150	32	2.9	7.6	82,600	2840	10,900	1910	
82	118,000	42	5.6	6.4	159,000	3940	24,800	2810	
45	154,300	49	7.3	7.7	208,000	4530	27,000	3150	
92	47,300	28	2.2	6.8	64,000	2490	9420	1690	
06	87,300	38	4.1	7.9	118,000	3360	14,900	2290	

SUMMARY OF ORIGINAL DATA
AND CALCULATIONS

T

RUN	P	T	Vac.	T_{s_1}	T_{s_2}	t_L	t_{o_1}	t_{o_2}	t_{o_3}	Δt_o	$T_{c.w._1}$	$T_{c.w._2}$	$\Delta T_{c.w.}$	W	
XI	29.7	250	0	248	248	212	239.5	238.5	238.5	25.5	17.5	61.0	79	423	
(cont)	15.7	216	45.5	218	218	170	202	202	202	32	13.7	27.8	25.5	1480	
	22.2	233.5	45.5	229	229	170	208.5	208.5	208.5	38.5	13.5	30.5	30.5	1630	
	29.2	248.5	45.5	244	244	170	239.5	229.5	229.5	64.5	13.8	28.4	26.3	1350	
	37.2	263	45.5	258	258	170	256	252	252	84	14.2	30.7	30	696	
	44.7	274	45.5	270	270	170	269.5	265	265	97.3	14.7	33.8	34.5	410	
	58.7	291	45.5	288	288	170	290.5	287.5	287.5	119	14.7	31.2	30	430	
XII	24.2	238	0	235	235	212	231	231	231	19	15.5	36.7	38.2	350	
	29.7	250	0	247	247	212	237.5	236.5	236.5	25	15.8	55.0	70.6	410	
	14.7	212	57.5	214	214	160	194	194	194	44	13.2	27.5	25.8	1840	
	30.7	252	57.5	248	248	150	248	244	244	96	13.5	22.5	16.2	860	
	45.7	275.5	57.5	273	273	150	272	270	270	121	14.5	30.0	27.9	370	
	60.7	293.5	57.5	291	291	150	294	291.5	291.5	143	14.5	26.8	22.2	370	
	24.2	238	57.5	237	237	150	233	224	224	78.5	14.0	28.0	25.2	710	
	22.2	233.5	57.5	228	228	150	223.5	211	211	67.3	14.0	27.7	24.7	825	
XIII			57.5	177	177	150	170	168.5	168.5	19.5	13.5	27.8	25.7	448	
			57.5	175	175	150	167.5	166	166	16.9	13.5	28.5	27.0	364	
			57.5	188	188	150	176.5	175.5	175.5	26.0	13.3	29.0	28.3	752	
			57.5	195	195	150	181	181	181	31.0	13.1	28.1	27.0	981	1
			57.5	203	203	150	185.5	185.5	185.5	35.5	13.1	31.2	32.6	1085	1
			57.5	207	207	150	188	188	188	38.0	13.0	30.6	31.7	1250	1
										✓					
XIV			64.8	167	166	130	155.5	151.5	151.5	23.5	13.5	24.5	19.8	634	5
			64.8	162	161	130	150	147.5	147.5	18.8	13.5	24.3	19.5	412	3
			64.8	174	174	130	160	160	157	28.5	13.4	27.0	24.5	807	8
			65.0	183	182	130	165.5	163.5	163.5	34.5	13.3	27.4	25.4	1175	13
			65.0	190	189	130	169	168	168	38.5	13.3	27.0	24.7	1460	16
			64.8	195	194	130	174	171.5	171.5	42.8	13.5	26.5	23.4	1665	17
	32.7	255.5	0	253	253	212	240	240	240	28.0	15.0	42.7	49.8	972	21
XV	28.7	248	0	243	243	212	236	234	234	23	17.0	35.2	32.8	738	10
			70.4	155	144	109	129	126	126	18.5	13.8	23.3	17.1	348	2
			70.2	160	155	110	138	135	135	26.5	13.5	22.2	15.7	672	4
			70.3	165	162	110	141.5	136.5	136.5	29	13.6	22.2	15.5	1072	7
			70.3	172	169	110	149	145	145	37	13.9	24.6	19.3	1172	10
			70.1	174	172	111	153	148	148	39.5	13.9	24.2	18.6	1325	10
			69.3	181	179	115	159.5	157	157	42.8	13.5	23.5	18.0	1795	14
			0	240	240	212	233	233	233	21	17.0	44.3	49.2	492	10
										✓					
XVI	24.7	239.5	0	238	238	212	230	230	230	18	16.0	39.1	41.6	381	71
	22.7	235	0	233	233	212	226.5	226.5	226.5	14.5	16.6	31.8	27.4	332	41
	21.2	231	0	229	229	212	225	225	225	13	17.2	31.2	25.2	263	29
	29.2	248.5	0	246	246	212	235	235	235	23	16.0	41.8	48.3	601	130
	39.7	267	0	266	266	212	250	244	244	35	13.7	52.0	69.0	1020	31
										✓					
XVII	15.7	216	27.0	217	217	189.5	209	209	209	19.5	13.5	[illegible]	[illegible]	[illegible]	[illegible]

TABLE I (cont.)

W	q/A_o	ΔT over.	Δt_w	Δt_i	q/A_i	h_o	h_i	U_o	REMARKS
23	151,000	38	7.2	5.3	209,000	5920	38,500	3970	
480	170,000	48	8.1	7.9	230,000	5320	29,100	3540	
630	224,000	63.5	10.6	14.4	302,000	5820	21,000	3530	
350	160,000	78.5	7.6	6.4	216,000	2480	33,700	2040	
696	94,000	93	4.4	4.6	127,000	1120	27,600	1010	
470	73,400	104	3.5	3.2	99,000	755	31,000	700	
130	58,200	121	2.7		78,700	490		480	
350	60,800	26	2.9	4.1	82,200	3580	20,000	2570	5/1/41,
410	131,500	38	6.2	6.8	178,000	5270	26,200	3460	10 A.M. - 6 P.M.
840	213,000	64	10.1	9.9	288,000	4840	29,000	3330	● ▲ ■
860	62,500	102	3.0	3.0	84,400	650	28,000	610	
370	46,700	125.5	2.2	2.3	63,000	390	27,400	370	
370	36,800	143.5	1.7		49,700	260		250	
710	80,250	88	3.8	5.7	108,000	1020	19,000	910	
825	91,600	83.5	4.3	11.9	124,000	1360	10,400	1100	
448	51,900	27	2.5	5.0	70,000	2660	14,000	1920	5/2/41, 12-6 P.M.
364	44,200	25	2.1	6.1	60,000	2640	9,900	1760	● ▲ ■
752	96,000	38	4.5	7.5	130,000	3690	17,400	2500	
981	119,000	45	5.6	8.4	161,000	3850	19,200	2650	
085	159,000	53	7.5	10.0	215,000	4480	21,500	3000	
250	178,700	57	3.7	15.3	106,000	4700	6,900	3380	
634	56,600	36.5	2.7	10.3	77,000	2410	7,500	1550	5/2/41, 6-12 P.M.
412	36,200	31.5	1.7	11.0	49,000	1930	4,500	1150	
807	89,300	44	4.2	11.3	120,000	3130	10,600	2030	
175	134,500	52.5	6.4	11.6	182,000	3900	15,700	2560	
460	162,000	59.5	7.7	13.3	219,000	4210	16,500	2720	
665	175,500	64.5	8.3	13.4	237,000	4100	17,700	2720	
972	218,000	43.5	10.3	5.2	295,000	7800	57,000	5000	
738	109,000	36	5.2	7.8	147,000	4740	19,000	3040	5/3/41,
348	26,800	40.5	1.3	20.7	36,200	1450	1700	660	11 A.M. - 6 P.M.
672	47,400	47.5	2.3	18.7	64,000	1790	3420	1000	● ▲ ■
1072	74,700	53.5	3.5	21.0	101,000	2580	4800	1400	
1172	102,000	60.5	4.9	18.6	138,000	2760	7400	1700	
1325	109,700	62	5.2	17.3	148,000	2770	8600	1770	
1795	145,500	65	6.9	15.3	197,000	3400	13,000	2240	
492	109,000	32	5.2	5.8	147,000	5180	25,300	3400	
381	71,400	27.5	3.4	6.1	96,500	3960	16,000	2600	5/6/41,
332	41,000	23	2.0	6.5	55,300	2820	8,500	1800	11 A.M. - 5 P.M.
263	29,800	19	1.4	4.6	40,300	2290	8,800	1570	● ▲ ■
601	130,500	36.5	6.2	7.3	176,000	5670	24,100	3600	
1020	318,000	55	15.0	5.0	430,000	9100	86,000	5800	
[illegible]	[illegible]	27.5	2.8	5.2	80,000	[illegible]	16,400	2,100	5/8/41

			57.5	195	195	150	181	181	181	31.0	13.[illegible]	28.[illegible]	27.0	981	119,000
			57.5	203	203	150	185.5	185.5	185.5	35.5	13.[illegible]	31.2	32.6	1085	159,000
			57.5	207	207	150	188	188	188	38.0	13.0	30.6	31.7	1250	178,700
XIV			64.8	167	166	130	155.5	151.5	151.5	23.5	13.5	24.5	19.8	634	56,600
			64.8	162	161	130	150	147.5	147.5	18.8	13.5	24.3	19.5	412	36,200
			64.8	174	174	130	160	160	157	28.5	13.4	27.0	24.5	807	89,300
			65.0	183	182	130	165.5	163.5	163.5	34.5	13.3	27.4	25.4	1175	134,500
			65.0	190	189	130	169	168	168	38.5	13.3	27.0	24.7	1460	162,000
			64.8	195	194	130	174	171.5	171.5	42.8	13.5	26.5	23.4	1665	175,500
	32.7	255.5	0	253	253	212	240	240	240	28.0	15.0	42.7	49.8	972	218,000
XV	28.7	248	0	243	243	212	236	234	234	23	17.0	35.2	32.8	738	109,000
			70.4	155	144	109	129	126	126	18.5	13.8	23.3	17.1	348	26,800
			70.2	160	155	110	138	135	135	26.5	13.5	22.2	15.7	672	47,400
			70.3	165	162	110	141.5	136.5	136.5	29	13.6	22.2	15.5	1072	74,700
			70.3	172	169	110	149	145	145	37	13.9	24.6	19.3	1172	102,000
			70.1	174	172	111	153	148	148	39.5	13.9	24.2	18.6	1325	109,700
			69.3	181	179	115	159.5	157	157	42.8	13.5	23.5	18.0	1795	145,500
			0	240	240	212	233	233	233	21	17.0	44.3	49.2	492	109,000
XVI	24.7	239.5	0	238	238	212	230	230	230	18	16.0	39.1	41.6	381	71,400
	22.7	235	0	233	233	212	226.5	226.5	226.5	14.5	16.6	31.8	27.4	332	41,000
	21.2	231	0	229	229	212	225	225	225	13	17.2	31.2	25.2	263	29,800
	29.2	248.5	0	246	246	212	235	235	235	23	16.0	41.8	48.3	601	130,500
	39.7	267	0	266	266	212	250	244	244	35	13.7	52.0	69.0	1020	318,000
XVII	15.7	216	27.0	217	217	189.5	209	209	209	19.5	13.5	29.8	29.4	445	59,000
			27.0	212	212	189.5	205	205	205	15.5	13.6	24.0	18.7	389	32,800
	17.2	220	27.0	222	222	189.5	212	212	212	22.5	14.0	33.0	34.2	536	84,800
			58.0	177	177	146	166	166	166	20	13.5	30.3	30.2	467	63,500
			57.8	186	186	147.5	174	174	174	26.5	13.5	29.8	29.4	722	95,600
			57.8	193	193	148.5	178.5	178.5	178.5	30	13.5	31.7	32.8	816	120,000
			57.8	203	203	149.0	184	184	184	35	13.8	31.6	32.0	1100	159,000
	32.2	254.5	0	252	252	212	237	237	237	25	16.2	45.1	52.1	704	165,000
XVIII	32.2	254.5	0	252	252	212	237	237	237	25	16.0	44.0	50.4	683	155,000
	27.7	246	0	242	242	212	232.5	232.5	232.5	20.5	17.2	44.6	49.3	400	89,000
	24.2	238	0	235	235	212	229	229	229	17.0	18.8	41.5	40.9	267	49,200
XIX	24.7	239.5	0	237	237	212	230.5	230.5	230.5	18.5	16.7	32.0	27.6	505	63,000
	32.2	254.5	0	253	253	212	237	236.5	236.5	24.8	15.8	39.5	42.7	868	167,000
	39.7	267	0	264	264	212	242.5	241	241	30.0	15.1	40.0	44.8	1335	270,000
XX	41.2	269	0	268	268	212	245	243	243	32	16.4	44.2	50.0	1145	258,000
	33.2	256	0	253	253	212	239	237	237	26	17.1	43.7	47.9	711	154,000

981	119,000	45	5.6	8.4	161,000	3850	19,200	2650	
1085	159,000	53	7.5	10.0	215,000	4480	21,500	3000	
1250	178,700	57	3.7	15.3	106,000	4700	6,900	3380	
634	56,600	36.5	2.7	10.3	77,000	2410	7,500	1550	5/2/41, 6-12 P.M.
412	36,200	31.5	1.7	11.0	49,000	1930	4,500	1150	
807	89,300	44	4.2	11.3	120,000	3130	10,600	2030	
1175	134,500	52.5	6.4	11.6	182,000	3900	15,700	2560	
1460	162,000	59.5	7.7	13.3	219,000	4210	16,500	2720	
1665	175,500	64.5	8.3	13.4	237,000	4100	17,700	2720	
972	218,000	43.5	10.3	5.2	295,000	7800	57,000	5000	
738	109,000	36	5.2	7.8	147,000	4740	19,000	3040	5/3/41,
348	26,800	40.5	1.3	20.7	36,200	1450	1700	660	11 A.M. - 6 P.M.
672	47,400	47.5	2.3	18.7	64,000	1790	3420	1000	● ▲ ■
1072	74,700	53.5	3.5	21.0	101,000	2580	4800	1400	
1172	102,000	60.5	4.9	18.6	138,000	2760	7400	1700	
1325	109,700	62	5.2	17.3	148,000	2770	8600	1770	
1795	145,500	65	6.9	15.3	197,000	3400	13,000	2240	
492	109,000	32	5.2	5.8	147,000	5180	25,300	3400	
381	71,400	27.5	3.4	6.1	96,500	3960	16,000	2600	5/6/41,
332	41,000	23	2.0	6.5	55,300	2820	8,500	1800	11 A.M. - 5 P.M.
263	29,800	19	1.4	4.6	40,300	2290	8,800	1570	● ▲ ■
601	130,500	36.5	6.2	7.3	176,000	5670	24,100	3600	
1020	318,000	55	15.0	5.0	430,000	9100	86,000	5800	
445	59,000	27.5	2.8	5.2	80,000	3020	15,400	2100	5/8/41,
389	32,800	22.5	1.6	5.4	44,300	2120	8,200	1500	12 - 8 P.M.
536	84,800	32.5	4.0	6.0	115,000	3770	19,000	2600	● ▲ ■
467	63,500	31	3.0	8.0	86,000	3180	10,700	2050	
722	95,600	38.5	4.5	7.5	129,000	3600	17,200	2500	
816	120,000	44.5	5.7	8.8	162,000	4000	18,400	2700	
1100	159,000	54	7.5	11.5	215,000	4530	18,700	2900	
704	165,000	42.5	7.8	9.7	223,000	6600	23,000	3900	
683	155,000	42.5	7.4	10.1	279,000	6200	27,600	3700	5/10/41, 12-3 P.M.
400	89,000	34	4.2	9.3	120,000	4350	13,000	2600	Boiler running
267	49,200	26	2.3	6.7	66,500	2900	9,900	1900	since 8 P.M. 5/8/41
505	63,000	27.5	3.0	6.0	85,000	3400	14,000	2300	5/12/41, 12-2 P.M.
868	167,000	42.5	8.0	9.7	225,000	6750	23,200	3900	Boiler running
1335	270,000	55	12.8	12.2	365,000	9000	30,000	4900	since 3 P.M. 5/10/41
1145	258,000	57	12.2	12.8	348,000	8100	27,200	4500	5/13/41 7-8 P.M.
711	154,000	44	7.3	10.7	208,000	5900	19,500	3500	Boiler running
									since 2 P.M. 5/12/41
									On originally at
									12 noon 5/8/41
									no promotion in
									meantime.

E. PRECISION OF MEASUREMENTS

The temperature rise of the condenser water was obtained to within ± .2°F. which is less than 1% of the majority of values measured. The weight determination of the water rate through the condenser was accurate to about 2%. The heat losses from the boiler and condenser are about 3% of the total heat transfer at low fluxes and about 1-2% at higher fluxes. Therefore, the measurement of heat transfer is accurate to within 6% depending upon the magnitude of the heat flux.

The use of octyl thiocyanate as a steam promoter resulted in uniform steam side coefficients. Thermocouple readings, except in the vicinity of the critical temperature, were very nearly the same for a given Δt (tube wall to boiling liquid). The hot junctions were located just under the surface of the copper tube and gave surface temperatures within 2°F. . The potentiometer was accurate to ± .3°F. . Therefore, the measurement of Δt was accurate to within 5%.

In general, it was felt that the overall precision of measurements should have been about ±15%. The data show that this figure is correct (Figures III and IV).

F BIBLIOGRAPHY

1. Akin, G.A.; "Heat Transfer to Boiling Liquids", Sc.D. Thesis, Chem. Eng., M.I.T., (1940)

2?

2. Akin, G.A., and McAdams, W.H.; Trans. Am. Inst. Chem. Engrs., 35, 137, (1939)

3. Cooper, H.B.H.; "Heat Transfer to Boiling Liquids," S.M. Thesis, Chem. Eng., M.I.T., (1938)

4. Cryder, D.S., and Finalborgo, A.C., Trans. Am. Inst. Chem. Engrs., 33, 346, (1937)

5. Cryder, D.S., and Gilliland, E.R.; Trans. Am. Inst. Chem. Engrs., 24, 1382, (1932)

6. Insigner, T.H., and Bliss, H.; Trans. Am. Inst. Chem. Engrs. 36, 491, (1940)

7. Sauer, E.T., Cooper, H.B.H., Akin, G.A., and McAdams, W.H.; Mech. Eng., 60, 669, (1938)

8. Sherman, L.M. and Kaulakis, A.F.; "Effect of Pressure on Heat Transfer to Boiling Liquids", S.B. Thesis, Chem. Eng., M.I.T., (1938)

9. Walker, K.W.; "Heat Transfer to Boiling Liquids Under Vacuum", S.M. Thesis, Chem. Eng., M.I.T. (1940)