Recitation #3

INTRODUCTION TO COMPUTER MODELING

Professor Larry Sass

1.0 Re-Designing the Plan

Here the plan was redesigned by using an grid underlay.

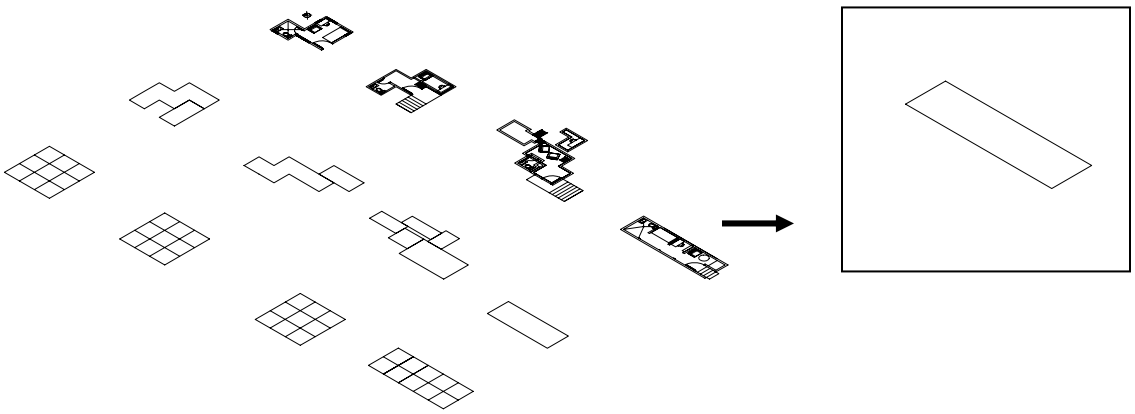

2.0 Breaking Forms Spaces

Once a form is plan shape is defined the next step is to break the plan into forms or to work with one shape.

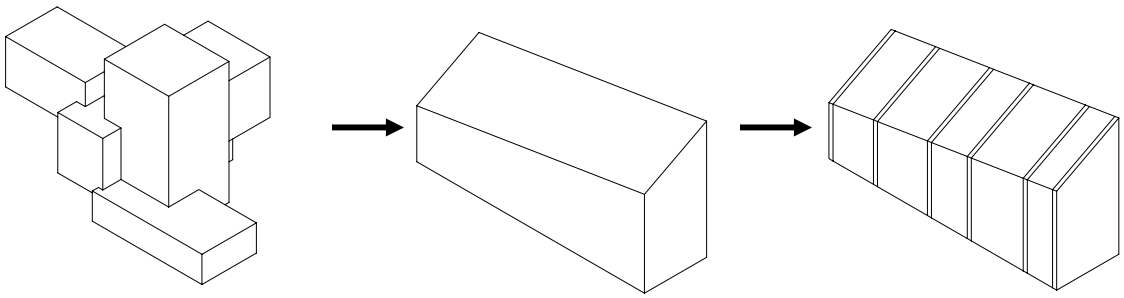

3.0 Building a Model

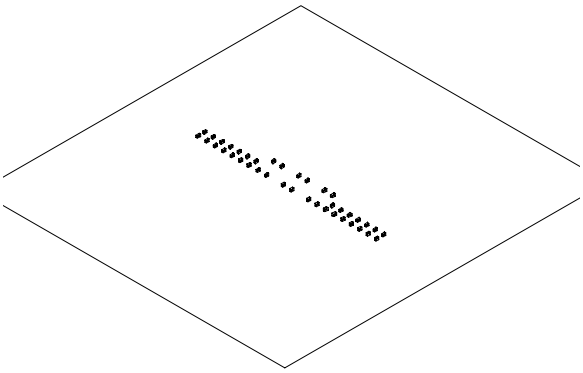

3.1 Ground plane and concrete supports

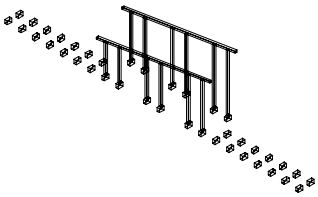

3.2 Structural supports

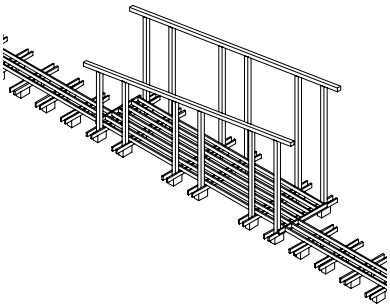

3.3 Floor supporting joist

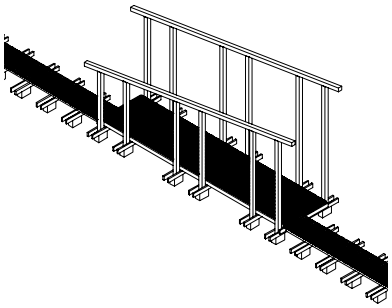

3.4 Flooring

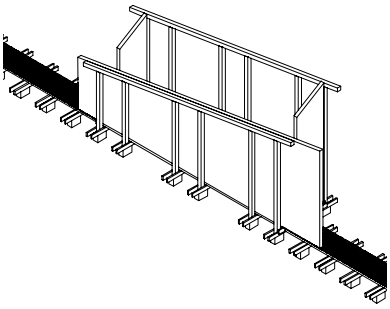

3.5 External side and back walls

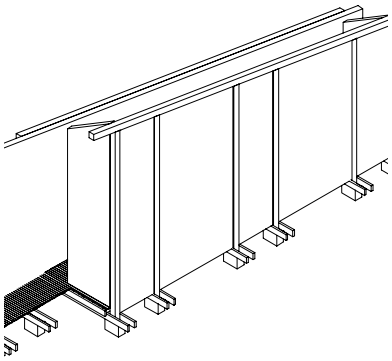

3.6 External front wall

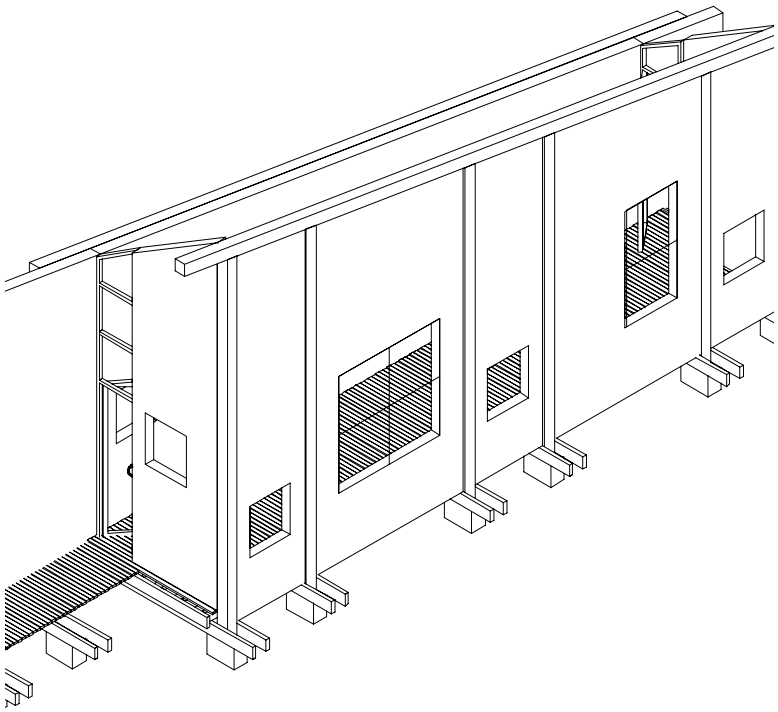

3.7 Punching window openings

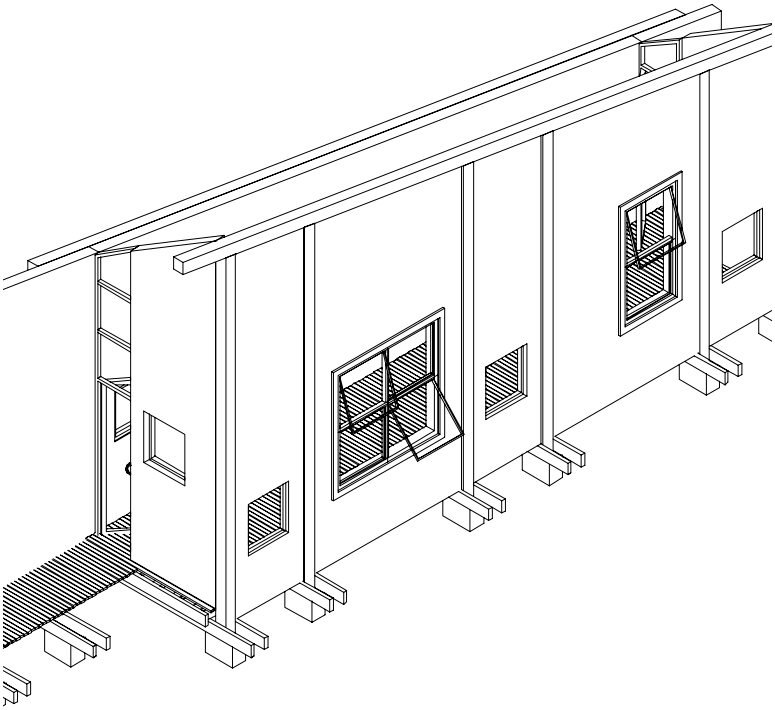

3.8 Window frames

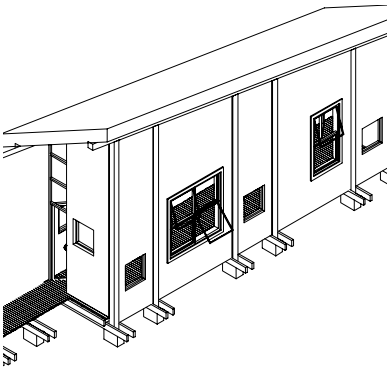

3.9 Roof Form

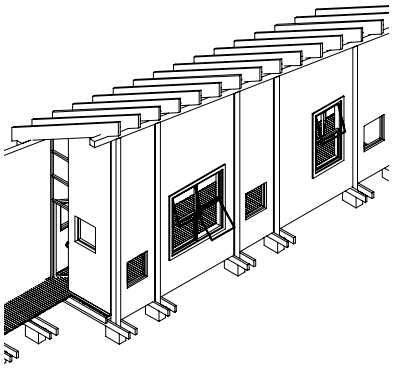

3.10 Roof Joist

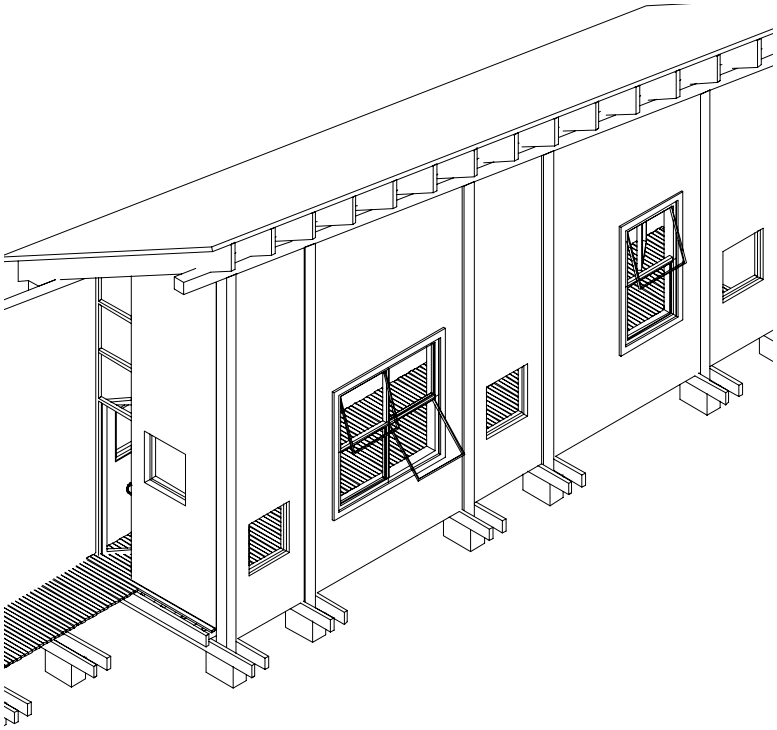

3.11 Roof Surface