# DISK TYPE ELECTROSTATIC GENERATOR

by

Bernard J. Cosman.



Submitted in partial Fulfilment of
the Requirements for the Degrees of

Bachelor of Science

and

Master of Science

in

Electrical Engineering

from the

Massachusetts Institute of Technology

1937

Author.....

Supervisor.

Chairman of Committee on
Graduate Study and Research .....

1171 Boylston St.,
Boston, Mass..
January 12, 1937.

Committee on Graduate Study and Research,
Department of Electrical Engineering,
Massachusetts Institute of Technology,
Cambridge, Massachusetts.

Gentlemen:

I herewith submit the accompanyiny thesis entitled "Disk Type Electrostatic Generator" in partial fulfilment of the requirements for the degrees of Bachelor of Science and Master of Science, in Electrical Engineering.

Research started in March, 1936, under Professor J. G. Trump, and was continued until October, 1936.

Respectfully submitted,

ACKNOWLEDGMENT.

I wish especially to thank Dr. J. G. Trump for his untiring interests in the research and for help in the design and construction of the apparatus.

I am also grateful to Dr. R. J. Van de Graaff and Mr. W. W. Buechner for their interest, and to Mr. Walter Kershaw whose aid in the construction of the machine was invaluable.

B. J. C.

DISK TYPE ELECTROSTATIC GENERATOR.

CONTENTS.

# CHAPTER I.

## INTRODUCTION; ELECTROSTATIC GENERATORS.

Until the advent of the Wimshurst machine, the production of high potential differences by electrostatic devices had been more an art than a science. It was evident from the construction of the devices that there had been no rigorous design principles embodied in them; rather they were mechanical gadgets which could be made to obey Coulomb's law and other "laws" which were deduced from data on previous experimentation in electrostatics. Various methods for producing static electricity had been aggregated but practical use of this type of power was rendered an impossibility due to inadequacy of knowledge in a complementary branch of physics; namely, the mechanism of atomic structure, which is inherently connected with electrostatic phenomena such as corona and other types of discharges.

Otto von Guericke is credited with the construction of the first electrostatic generator of any historical consequence; his machine utilized the potential difference generated when the machine

operator placed his hands on a rotating sulphur ball, ball and hands being frictionally excited to equal and opposite potentials.

When experimenters saw that von Guericke's machine could actually segregate charges, all sorts of blind experimentation were undertaken in the hope that some better materials than human hands and sulphur to produce static voltages could be found. Sir Isaac Newton was among this group of men; he used glass instead of sulphur. This era was in the seventeenth century and it wasn't until a century later that the Ramsden machine was introduced. Ramsden used most effectively all the knowledge of electrostatics which had been accumulated up to his time. In the first place, it was known that friction between two physically-foreign objects produced static charges on the objects. Further, it was known that a comb of points could be used to collect charges from an object if it were placed close to the object. Ramsden's reasoning, then, must have been along the following pattern. The most effective machine would be that which carried the induced charges to the collector arrangement at as great a rate as possible. A charge carrier

capable of moving at high speeds would be a disk of insulating materials, and preferably one which could be used as one element of the friction device. Glass and felt had been known to produce charges vigourously when in frictional contact. Therefore the ideal machine would employ a glass disk rotating at high speed with felt rubbing against it at one angular position and a set of collector points diametrically opposite the felt to collect the charges produced on the glass by the felt. It would be interesting to note the similarity between principles used by Ramsden and the principles used in the machine which is the basis of this paper.

Machines invented after the Ramsden machine utilized the knowledge of electrostatic induction of charges in a conductor due to the presence of another charged body. This principle was employed by Lord Kelvin in a much more clumsy and inefficient way than that shown in the Wimshurst machine. It appears that the Wimshurst machine was to Lord Kelvin's machine what Ramsden's machine was to it's predecessors; the charges segregated by electrostatic induction are carried away by metallic segments on rotating glass disks to collector combs which are connected to Leyden jars to store the charges. This

latter feature added phenomenally to the stability of the machine as a voltage generator and placed its design as an advanced step in electrostatic generators. The Wimshurst machine was introduced in 1878.

The ensuing period to 1931 saw the rise of electromagnetic devices to produce high d-c voltages up to about 350 kilovolts. Electrostatic machines were considered a practical impossibility until Van de Graaff's machine was introduced. Other devices for producing high voltages were made in the period from 1900 to 1931 such as blowing electrified dust particles down an insulating column or other obviously impractical methods.

The practical sources of high steady d-c voltages were almost exclusively of the transformer-kenotron type; however, cascaded d-c generators and even enormous banks of storage batteries were used. Impulse generators gave high peak voltages, but because steady d-c voltages are more often preferred to non-uniform voltages, the uses of impulse voltages are extremely limited. Troubles with transformer-rectifier sets at increasingly higher voltages are: first, insulation requirements become increasingly difficult at higher voltages; second,

the charging current for the a-c apparatus at high voltages(a-c) becomes excessive, as it is proportional directly to voltage; third, breakdown of the rectifiers on the non-conducting portion of the cycle is a major difficulty; fourth, adequate smoothing of the pulsating d-c output voltage cannot be effected because the size of capacitors for such voltages would render their construction impracticable; fifth, the less the filtering, due to higher voltages, the more the wave form approaches the output wave form of the rectifiers, which is often very undesirable.

It remained, therefore, for Van de Graaff in 1931 to introduce the electrostatic generator which bears his name and which is capable of producing any steady d-c voltages up to several millions with current capacities up to several milliamperes. These generators embody the least number of energy transformations of any machine ever built to produce high voltages. The conventional type of Van de Graaff generator operates according to the following generalized scheme. The high voltage terminal is a sphere, which is the simplest of three-dimensionned bodies,

whose curvature determines the potential to which the terminal will rise, because as charge is deposited inside the sphere, by processes which will be immediately explained, its potential will rise until the medium surrounding the terminal becomes overstressed electrically resulting in ionization of the medium and a corona discharge from the terminal or until the load limit is reached. The greater the radius of curvature, then, the greater is the voltage which the machine will generate.

Because charges must be brought into the shell, which is essentially a Faraday cage, the conventional way of transmitting motion and power suggested that insulating belts be used to carry charges from earth to the terminal. Charges may be put on the belt (charging process) in many ways, the simplest and most effective being that of spraying charges on the belt from a corona wire or comb placed close to the belt opposite the metal pulley over which the belt travels. The corona is produced by placing a few thousand volts potential difference between the pulley and comb. The simplest means of taking

charge from the belts is to place sharp points close to the belts inside the terminal, the points being connected to the sphere. The high gradient produced at the collector points by the charge on the ascending charged surface causes ionization of the medium and a current flow to the collector. It is seen that if the charging and collecting processes were one hundred percent efficient, all the charge "sprayed" on would be taken off in the terminal. The efficiency is however not 100 %; Therefore some of the charge returns on the descending side of the belt. The amount of charge which can be placed on the belt is limited to that which will produce a breakdown gradient in the medium surrounding the belt (usually air). The current capacity of the machine is determined by the amount of charge per unit time which can be brought into the terminal. Obviously if the descending side of the belt could be utilized to carry away from the terminal charges of the opposite sign to those on the ascending side, the current output would be correspondingly increased. The multiple-belt machine leads to a technicality which is often not appreciated. It is necessary

in order to obtain a charge transfer proportional to the number of belts that the belts be so driven and charged that they present a series of alternately positive and negative surfaces. To exemplify the technicality, consider a fictitious design of a multiple belt machine which would utilize only the ascending belting to carry charges to the terminal. If the machine were tested it would be found that the current output would be only slightly greater than that for a simple single charge carrier. The reason is: only that amount of charge of one sign which will produce breakdown of the surrounding medium can be placed in the virtual volume occupied by the belts. That is, when similar charges are carried by more than one surface, with no charges of opposite sign between these surfaces, the total electrostatic flux outside the volume of the belts is determined by the lines of force which originate from every charge in that volume, and no more charges can be placed in that volume than will produce the limiting electrostatic flux density for the medium outside that volume. When, however, surfaced of oppositely charged particles are alternated with the surfaces under consideration, lines of force from

charges of one sign terminate on charges of opposite sign so that the number of charge carrying surfaces is limitless. Practical limitations must be effected for other reasons which shall be presented in a later chapter. If both runs of belts are charged in the multiple belt machines and if the pulleys rotate in the same direction, this charge allocation is automatically taken care of. The principles and methods used in charging the descending side of belt will be discussed in the next chapter.

The previous discussion becomes more pertinent and absolutely important when other types of charge carriers are used. For example, if any schemes are devised for transmitting volumes of charges, such as a blast of electrified dust particles through an insulating column, the current capacity of the device is limited by the amount of charge in that volume which will produce a breakdown gradient in the medium around the volume. Such considerations were necessary in carrying out plans of a multiple-disk generator. These will be taken up in the chapter on multi-disk machines.

Because it is apparent that a higher charge-carrying rate into the terminal will result in a higher output current, one of the objects of this paper is to determine the possibilities of disk generators as high-current electrostatic machines,

in virtue of the high peripheral speed of a disk rotating at high speeds.

With increased output current at a given voltage, the output power is correspondingly increased. Thus, the disk machine would apparently give a high power to size ratio compared to a belt machine of similar proportions. To investigate this possibility is a second aim of this research.

It is known that increased air density causes a linear increase in its breakdown gradient. A seperate aim of this research was to have determined the practical possibilities of putting the disk machine in a compressed gas medium, as both current and voltage would be increased by the same factor. Therefore the power output would vary directly as the square of the pressure. But the friction and windage losses would assumedly increase linearly with pressure, resulting in an overall linear gain of power output with pressure. This phase of the research was not undertaken due to the limited time allotted to the entire research. It was only of minor importance, however, when compared with the object of determining the current capacity, power compactness, and mechanical suitability of disk-type Van de Graaff generators as compared with the conventional generator, the belt type.

## CHAPTER II.

## SINGLE-DISK GENERATOR IN AIR.

### 1. Principle of the Machine.

The elementary principles involved in the operation of the Van de Graaff belt type machine were stated in the preceeding chapter. Those principles hold exactly in the disk-type generator. However, the difference in mechanical operation of a rotating disk and a moving belt necessitates corresponding physical modifications to be made in the charge-collecting and charging devices. Consider the diagrams of the charging systems in the two cases.

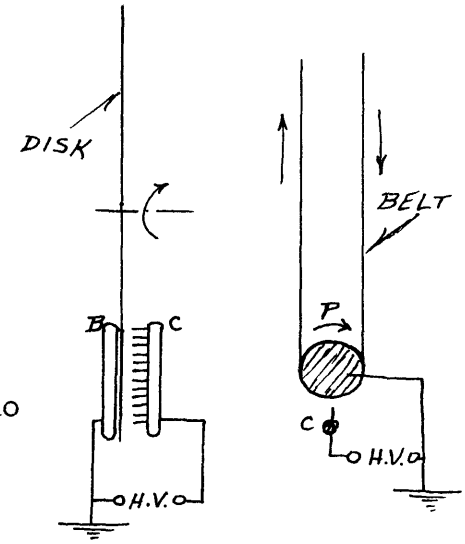


In the belt type, the metal pulley, P, over which the belt travels, acts as one electrode for the corona exciter, the other being the comb, C. In the operation of the disk, there is no device which corresponds to the pulley, P, of the belt machine. A metallic plate or rod facing the comb, C, but situated "behind" the disk with respect to C, as illus-

trated by B in the sketch, would complete the electrical similarity between the charging systems of the two machines. That is, if a potential difference be placed between C and B such that a corona discharge from C to B would take place, charges of one sign will flow from C toward B but will be intercepted by the moving disk and carried away to the collecting mechanism inside the high voltage terminal.

The collecting systems are shown in the two following diagrams.

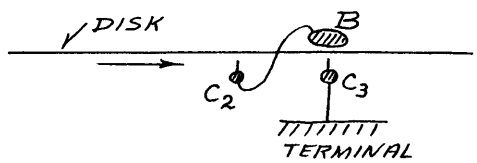


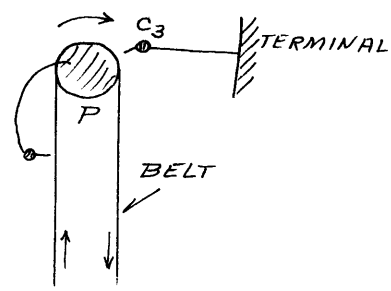


The operation of the belt collector is as follows. Charges on the uprunning side of belt are partially collected by $C_2$, which is electrically connected to P, and the whole insulated from the terminal. $C_2$ and P rise in potential and thereby cause a potential difference between $C_3$ and P. If negative charges are ascending, then P becomes negative with respect to $C_3$, causing positive corona from $C_3$ toward P, the positive charges becoming bound on the descending side. Actually, $C_3$ must neutralize most of the negative charges coming

up on the belt before placing net positive charges on the belt. When the positive charge reaches the lower pulley and charging assembly, it is neutralized by the negatives being sprayed on by the lower corona spray comb. Here again, all the positives must be neutralized before a net negative charge can be given to the ascending side of belt.

The disk type collecting mechanism corresponds to that of the belt machine exactly as do the charging systems in the two cases. That is, $C_2$ collects enough charge to maintain B at a sufficient corona-inducing potential from $C_3$. The voltage to which $C_2$ and B rise is determined partially by the effective capacitance of $C_2$ with respect to the amount of charge which $C_2$ envelopes. This point will be further explained later in the chapter in the section on charge collection. $C_3$ then sprays enough charge of opposite sign on the disk to neutralize the incoming band of charge and places oppositely charged particles on the down-running surface.

The limit to the amount of charge which can be placed on the surface is determined by the breakdown strength of the medium surrounding the surface. For atmospheric air it can be shown that the theoretical maximum amount of charge which can be placed on one

square centimeter of the surface is $5.3 \times 10^{-9}$ coulomb. This value assumes the breakdown gradient of air to be 30 KV per centimeter. Actual operating gradients, however, cannot approach this theoretical maximum and therefore due consideration should be given to calculations based on this high value of gradient.

The current capacity of the machine is determined quite simply. It is the rate at which charge is accumulated at the high voltage shell. The theoretical maximum current from the terminal is then the product of the surface area persecond entering the terminal and the maximum charge density which can be placed on the surface. In the present case, the disk is 30 inches in diameter and a region approximately 5.5 inches in width is charged. The disk speed is 2800 rpm. The theoretical maximum current obtainable from the terminal is calculated as follows.

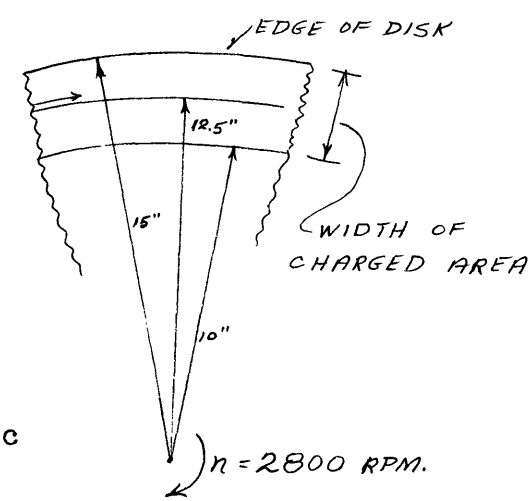


$$v = r\omega$$
$$= 12.5(2\pi \times 2800)$$
$$= 2.2 \times 10^5 \text{ in/min}$$
$$= 9.34 \times 10^3 \text{ cm/sec}$$

$$\text{Area/sec} = 9.34(5.5 \times 2.54)$$
$$= 1.30 \times 10^5 \text{ cm}^2/\text{sec}$$

$$\text{Current} = \left(\frac{\text{cm}^2}{\text{sec}}\right)\left(\frac{\text{charge}}{\text{cm}^2}\right)$$
$$= (1.30 \times 10^5)(5.3 \times 10^{-9}) = 690 \times 10^{-6} \text{ ampere.}$$

The machines never reach the theoretical maximum for the following reasons. First, as was mentioned before, the breakdown gradient of air at atmospheric pressure is never 30 KV per centimeter except under the most impractical conditions. That is, 30 KV is the breakdown voltage of two one centimeter diameter spheres spaced one centimeter apart in air at standard temperature and pressure and correct relative humidity. Second, when the terminal is allowed to rise in potential, there is introduced another component of electric field at the surface of the charge carrier due to the potential difference across the charge carrier. The resultant electric field (gradient) at the surface is therefore the vector resultant of the component due to the charge on the terminal. As the potential of the terminal rises, the gradient becomes greater, so that the field from the charged surface must necessarily decrease in order that the resultant field be equal to the breakdown field for the air. This means, of course, that the amount of charge which can be supported by the surface decreases as the voltage attained by the terminal is increased. The less this vertical field can be made, the better will be the characteristic of the charge carrier. In a belt machine, this feat could be accomplished by increasing the distance from terminal to

ground. Third, the charge carrying surface must be able to retain the maximum a mount of charge throughout its entire journey from ground to terminal. That is, if all regions through which the surface travels do not have equal breakdown gradients, the current capacity of the surface w ill be limited to that amount of charge which is allowed to remain on the surface as the surface passes through the weakest (lowest breakdown field) electrical region. The excess amount of charge which is allowed to remain on the surface in the stronger electrical regions is lost in corona when the weaker regions are reached. It is desirable, therefore, to maintain a uniform electric field from terminal to ground.

When one considers the extent to which this third factor can be realized in disk and belt machines, it is obvious that the field from terminal to ground is inherently much more uniform in a well designed belt machine than in a single-disk machine. In the belt machine an insulating enclosure can be placed a bout the belts and a uniform conduction leakage down this insulation partially insures a uniform gradient down the entire enclosure. The enclosure should be rectangular because two of the four surfaces can then be placed parallel to the belt surfaces and thereby insure

the maximum degree of uniformity. When the terminal is made re-entrant at the region where the belts and supporting mechanism enter the terminal, ideal gradient conditions are practically effected along the belt region. Sketches of re-entrant and non-re-entrant terminals are shown below.

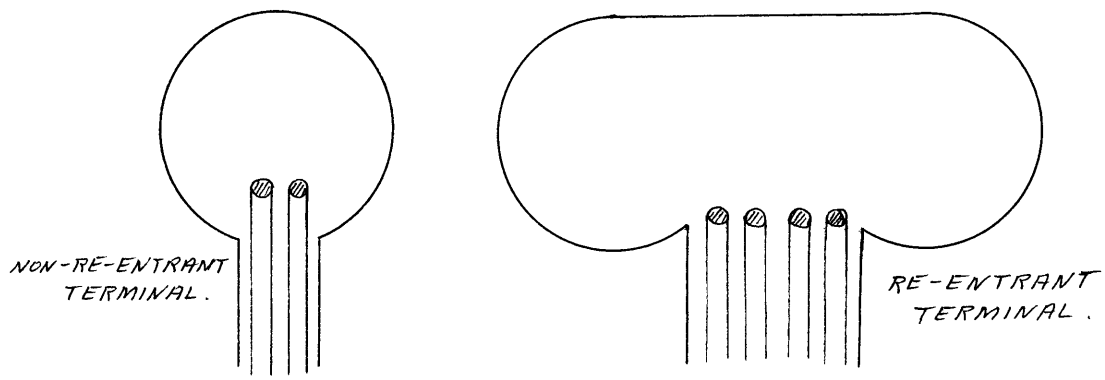


It should be noted that in generators with many belts, the upper pulleys may be situated so as to simulate a metallic plane across the opening through which the belts pass and thereby obviate a discontinuity in the under surface of the high voltage terminal. This "plane" of pulleys, which is at terminal potential, stabilizes the uniformity of vertical gradient in the inner belt region.

When one considers the distribution of gradient from terminal to ground in the single disk generator, it becomes apparent that the practically ideal conditions procurable in the belt machine are inherently

impossible to effect in the disk machine due to the physical disposition of shape of the vital parts of the machine. That is, the terminal "covers" only a small part of the disk area so that w hen voltage is applied between terminal and ground, the gradient over the disk surface varies greatly from point to point. With a variable gradient over the charge-carrying band, the charge capacity of the surface will vary from point to point along its path toward the terminal. Only when the terminal is short-circuited to ground is this cross component of field eliminated, thereby enabling the disk to carry its maximum amount of charge.

As the terminal rises in potential, conduction losses increase and corona-leaks originate at weak electrical regions. The "regulation" of the machine at any voltage is then the current carried up by the charge-carrier minus the loss currents. The current carried up to the terminal is maximum at zero terminal voltage, as has just been shown. It should be noted that the terminal may be shorted at will without damage to any part of the machine, because the collector mechanism functions without regard to the potential of the termina l, which is essentially a Faraday cage. In calculating the radii of high voltage terminals, the

simple gradient formula is used: $G = V/r$, where $\underline{G}$ is the breakdown gradient of the medium, $\underline{V}$ the desired voltage, and $\underline{r}$ the necessary radius of curvature of the terminal to attain the voltage, $\underline{V}$.

## 2. The Disk

In the designing of any machine, the size and rating must be predetermined. In the instance of the machine now to be described, the size is limited due to mechanical difficulties rather than electrical. For example, to build a machine for 500 KV, a maximum strike distance from high voltage terminal to ground must be considered and upon doing so, it is apparent that the diameter of the disk, which must extend from ground into the terminal, becomes excessive from many viewpoints. In order to make the disk sufficiently rigid to rotate at reasonable high speeds, it must be made very thick as well as perfectly plane. Such a disk of extremely high electrical resistivity is obtained only with great difficulty and expense. Furthermore, the stress in the disk varies as the diameter, the square of the angular velocity, and the mass, and because larger disks must be made thicker, the mass factor varies practically as the square of the diameter. Thus it may be said that the stresses vary as the square

of the diameter of the disk for constant angular velocity.

Because the disk is to carry bound charges from one point to another, it is essential that the material of the disk have as high a resistivity (surface and volume) as possible for all values of relative humidity of the air surrounding the disk. Losses in the disk materially affect its efficiency and consequently the efficiency of the generator. Its surface should be as homogeneous and plane as possible to effect an even gradient over its entire charge-carrying surface. Otherwise the amount of charge which can be carried by the system will be limited by the weakest electrical region. Hence it can be seen that the more efficient charge-carrying regions will lose some of their charge through corona losses when the region of low electrical breakdown strength is reached.

Various types of dielectrics have been tried and every other possibility considered. A most desirable disk would be of glass since it has excellent electrical properties and is very rigid. Its mechanical properties, however, render it impractical and unsafe for the speeds contemplated in this research. As its tensile strength is low, it cannot be used in large diameters at high

speeds. Imperfections in its surface such as scratches are potentially great hazards in virtue of the extremely high stresses in the glass in the region of the scratch. A means of rotating the glass calls for a central hole and a fastening device to accomodate the torque of the driving mechanism. After these operations are performed, however, the glass is full of strains and must be very carefully annealed. Even after a suitable disk has been made, it is doubtful whether the localized strains close to the central hole due to the driving torque could be tolerated while the disk was being brought up to speed.

Micarta is a suitable insulator and has a very high tensile strength compared to other high grade insulators. For instance, data on a disk of micarta 30 inches in diameter and 1/8 inch thick gave a bursting speed of 9000 rpm, a speed far above that contemplated. A disk of this size was tried in the first model of the generator, as 30 inches was apparently a practical safe limit to the size to which a disk should be made to run at high speeds. It should be appreciated, nevertheless, that slower speeds may be used in conjunction with larger radii to give the same peripheral speed, but the considerations named previously must be realized. Electrically the micarta disk was

found to be suitable but a mechanical defect introduced itself with time. That is, the disk started to warp into a "dished" shape such that the collector and spray points scraped into the disk. These points are only about 1/8 inch away fromthe disk surface, as will be explained in a later section of this chapter. Consequently the disk must run perfectly plane at all speeds from zero to its maximum. Another bad feature of this disk when rotating at high speed (about 3000 rpm) was tha t any slight shock normal to the disk surface would set it into oscillations whose damping was very erratic, sometimes with a positive and sometimes with a negative characteristic. When the oscillations would build up to an amplitude sufficient to make the disk strike the comb points other extremely violent oscillations would take place accompanied by more or less standing wave patterns along the surface. When the condition existed, it was of course imperative to stop the disk as quickly as possible in order to prevent complete destruction of the machine. This stopping action was effected by converting the d-c motor which normally drove the disk into a d-c generator, by shorting its armature through a variable resistance (the starting box of the motor).

A simple switching circuit given below accomplished the desired result nicely.

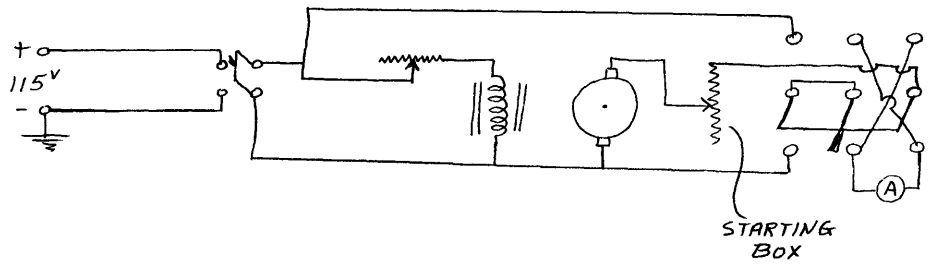


Practically the only other materials for use as disks were textolite, hard rubber, bakelite, and paper. Textolite was eliminated because it was thought to exhibit warping properties which cannot be tolerated. Hard rubber is quite suitable electrically but would also warp. Besides this, it is not nearly as strong as bakelite or micarta or textolite.

Paper was not disregarded as a possibility because a concensus of opinion among collaborators indicated that the paper might straighten out into a perfect plane when rotated at high speed, primarily because of its small mass. A high grade of stiff and heavy paper was cut into a disk and reinforced at the hub by 18-inch paper disks glued to both sides of the main 30-inch disk. The entire assembly remained under plane pressure for about 24 hours. When assembled, the paper disk remained perfectly plane and rigid and

had the appearance of being a success until the motor power was turned on. Then the paper went all out of shape, forming moving standing wave patterns on the surface whose amplitude was almost 3 inches. There were no objects around the disk but the two wooden uprights which supported the shaft and the high voltage terminal. The terminal was left out for the trial. There was violent propellor action as indicated by an alternating pressure in the regions normal to the surface. Two reasons undoubtedly explain the behavior; first, when the fairly high driving torque was applied to the small region of the paper (about 3 inches in diameter) at the hub, there was differential torsion throughout the large disk which distorted the plane shape of the disk; and second, as the disk gathered speed, air currents set up by the erratic windage caused regions of varying air pressure on the disk, tending to shape the disk according to the pressure field. Obviously the paper was discarded.

The only other possibility was bakelite, which exhibited good mechanical properties as well as electrical. Its tensile strength is five times that of hard rubber, and at low relative humidities its electrical action is practically the same as that of

hard rubber. The disk which was used in the final model of the generator was 1/4 inch bakelite (black), 30 inches in diameter, with its edges rounded off. It remained perfectly plane throughout the remainder of the research and ran at speeds up to 4000 rpm in the speed trials with remarkable steadiness.

The greatest mechanical problem was afforded by the disk and therefore considerable importance must be associated with it. It is also the basis of the electrical design of the machine.

### 3. Framework of the Machine.

Two insulating uprights fastened to a wooden base are essentially the skeleton of the generator as indicated by the plans for the machine (page 53). The base must accomodate the motor and charging mechanisms. The small space required for this apparatus, however, would not afford enough base area to prevent the machine from tipping over if abnormal impacts were given to the upright portions of the machine. White pine was selected for the base material as it allowed the easy fastening of apparatus thereto by means of lag bolts or screws.

The two uprights which support the disk shaft

and the high voltage terminal were made of mahogany which was kiln-dried and later impregnated with wax by immersion in molten wax for four days. After essembly, the wood was treated on the surface with ceresin wax to improve the surface resistivity characteristics under varying atmospheric conditions. It is obvious from the plans that the uprights must withstand the total voltage of the machine, which reached a maximum of 220 KV, as will be explained shortly. The shaft and hub assembly of the machine are maintained at an intermediate potential of approximately one half the total voltage of the generator in virtue of its position between high voltage terminal and ground, and of the conduction currents through the supports and disk. The potential of this assembly is also kept from rising to an excessive value by its corona voltage limitation.

Rigidity of the two upright pieces was insured by a crosspiece shown above the high voltage terminal. One upright had to be made detachable in order that the disk and terminal assemblies might be removed for alterations or other operations.

### 4. Shaft Assembly of the Disk.

The simplest means of rotating the disk appeared to employ a stationary shaft upon which a double-row

ball bearing was securely fastened, the disk being screwed to a fitting clamped on the outer race jacket of the bearing. It was not imperative to maintain the shaft stationary in this machine but, as will be explained in Chapter III on multiple-disk generators, when more than one disk is used, adjacent disks must rotate in opposite. Thus, the extrapolation from single disk to multiple disks is simpler if a standard method of motor drive is used. It is obvious that individual drives must be used to rotate adjacent disks efficiently; consequently a stationary shaft should be used. The shaft bearings (on the insulating uprights) and the V-belt pulley on the shaft are well rounded to prevent corona dissipation of energy from the high voltage terminal. The wood screws which fasten the end-bearings to the uprights are prevented from leaking corona by their presence inside the mahogany.

### 5. Motor Driving Mechanism.

A d-c motor is desirable in many ways, in that its speed may be changed and consequently effect a change in the output of the generator. This type of drive was used with the micarta disk but was replaced by a three-phase induction motor when the bakelite disk was installed. Two reasons for the change were

that the bakelite disk ran true enough to obviate the use of a d-c motor as a generator to stop the disk, and that constant speed is desirable for comparison of results under different or altered electrical conditions caused, for example, by changes made in a collector or spray assembly. A tachometer or stroboscopic device may be used to check the speed of a d-c machine, but the advantages of omitting the speed variable from analytical considerations greatly exceeded the advantages of a controlled d-c system in this research.

V-belt drive was employed in preference to a narrow flat belt because the high starting torque always caused the flat belt to slip off the driven pulley (the smaller of the two), and the load caused by the high windage loss of the disk caused the belt to slip greatly on the driven pulley when running at equilibrium speed. The V-belt drive (52 inch belt) proved satisfactory in every respect, its friction losses and slippage being negligible.

### 6. The High Voltage Terminal.

From the plans it is seen that the disk must enter the high voltage terminal to an extent sufficient to allow the collector mechanism to function. That is to say, the high voltage structure should span rad-

ially the width of the charge carrying area which enters it, this area being determined by the length of the spraying comb mechanism at the charging point.

Elementally, the terminal is a sphere but its fabrication is vastly different from convention due to mechanical problems arising from making an efficient entrance for the disk. As the disk almost disects the terminal in a single-disk machine, the structure of the high voltage body was accomplished by making two hemispherical wooden forms which were sprayed with metallic zinc and placing one form on each side of the disk. The two zinc surfaces are connected electrically by a piece of wire suitably located so as not to interfere with the operation of the disk or the collector. The wooden forms were turned out on a lathe and made partially hollow to accomodate the collecting apparatus. The collector comb was mounted on a piece of hard rubber instead of depending on the wood for insulation from the zinc surfaces. The spray comb was also mounted on the hard rubber surface but was electrically connected to the surface (zinc) of the terminal. The principle used was that stated in the section on the principle of the machine. The backing plate for the down-spray comb was also necessarily mounted on hard rubber for the same reason. The shape of the

backing plates is immaterial, provided the surface of the plate facing the disk has a sufficient radius of curvature to prevent corona to the back of the disk. The combs were made by press-fitting phonograph needles into holes in a round steel rod whose ends were well rounded off.

The only means of adjusting the combs and the plate inside the terminal was to vary the distance of each hemisphere from the disk. Both combs unfortunately had to be placed practically equidistant from the disk in virtue of the mechanical structure of the terminal. Only small variations in distance from the disk could be effected by shimming the combs on their hard rubber mounting. The difficulties in adjusting these combs will be appreciated when it is said that the generator had to be practically disassembled to effect the change. The plans should make this point evident.

7. Charging and Discharging the Disk Surface.

The performance of the disk type machine is most vitally affected by the characteristics of the charging and discharging systems. The most efficacious charging system was discovered only after experimentation on the efficiency of various types of charge-collecting mechanisms revealed most unexpected data.

The relative abilities of single point and multiple point (combs) collectors were investigated according to the following general scheme. The disk machine without the high voltage terminal was arranged with a set of adjustable collecting points at various angular positions on the disk surface as shown in the diagram below.

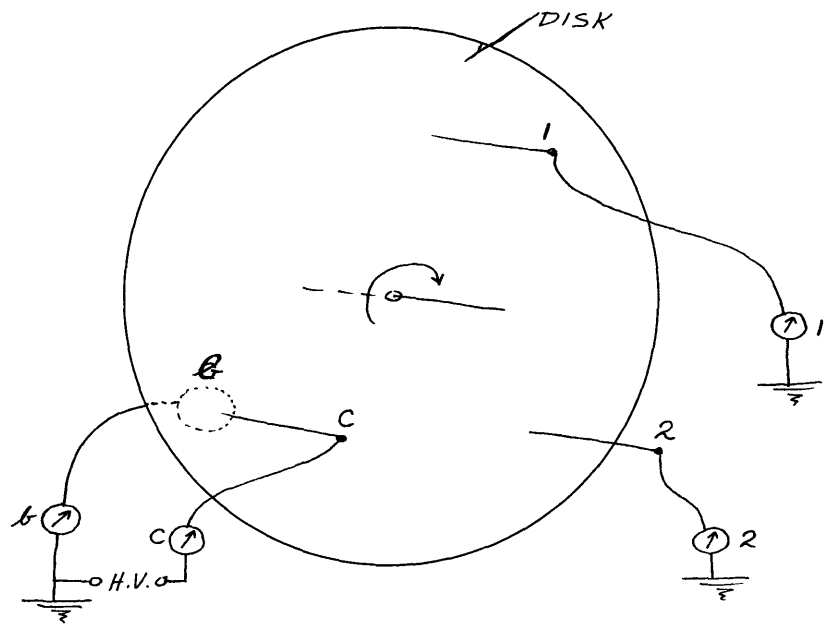


The collectors, 1 and 2, were merely 10-inch lengths of No. 8 copper wire tapered on one end to a point. They were supported on ring stands which allowed their easy adjustment in both elevation and distance from the disk surface. The meters, 1 and 2, indicate the current in the collector circuit. The charging rod,C, is idnetical with 1 and 2, except that its ring stand

support must be insulated for the high corona excitation voltage. The voltage in this instance was adjustable from zero to 5000 volts. The backing surface for the charging system was a brass ball about two inches in diameter placed along the extended axis of the rod,C. Both collecting points and charging device were set in various radial positions, and the effeciency of the collectors, especially 1, was determined by measuring the currents in 1 and 2. Extensive experimentation with this apparatus produced the following results. The single-point charging device charged only a small annular area of the disk. With C and 2 in the same radial position (distance from the axis of the disk) and with point 1 moved from the hub roward the edge of the disk, the current collected by 1 increased to a maximum when its radial position was the same as that of C, and then decreased as it proceeded toward the edge. In spite of the initially narrow charged band, point 1 always collected considerable current regardless of its radial position. The current collected by 2 varied exactly opposite to the manner in which 1 varied; that is, when 1 was a maximum, 2 was zero, and as 1 decreased, 2 increased. This result is logical because as 1 moves away from the charged region its ability to collect charge from that region

decreases, since the gradient at the collector point due to the charged region will decrease as the distance increases. Charges still remain on the disk after leaving the field of collector 1 and are collected by 2. Incidentally, in the light of the above discussion, it should not be necessary to restrict the travel of point 1 to the edge of the disk. Even though the collector is placed beyond the edge of the disk, it should still collect charge, although at a greatly decreased rate.

The next experiment was that of using a spray-comb and large backing plate charging system, in order to charge a large annular area of the disk surface. The charged area was now about 5.5 inches in width. Two pointed rods were placed about 3 inches apart on a radial line but they collected only 20 percent more current than one single-pointed rod. All the charge was not collected, as indicated by the current in the probe collector, number 2.

When a 5-inch comb was used to collect charge at position 1, about 50 percent more current was obtained than with the single point collector. It should be apparent that collector number 2 is merely a probing electrode to determine how much charge is getting by the collecting device at position 1. The most important

effect in the entire research was discovered when the probe electrode, 2, was used to test the amount of charge left on the disk after the comb collector was used at 1. It was found that the current in the probe electrode was of opposite sign to that being collected in electrode 1. That is, charges of one sign were being sprayed on the disk instead of being collected by the probe. Consideration of these data resulted in the hypothesis that charges of opposite sign to those on the "front" side of the disk were being sprayed on the "back" of the disk. Another effect which was noticed previous to this discovery was that the air in the region between disk and backing plate was being ionized due to electrical overstress. The ionization itself could, of course, not be seen, but a purplish glow indicative of the recombination of positive and negative ions in an ionized region could be seen. This gas discharge "behind" the disk did not have the characteristics of the corona discharge, since the latter is identified with ions of one sign only moving in one direction. In the discharge in question, positive ions moved in one direction while negative ions (electrons) move in the opposite direction. If, for purpose of discussion, we assume that the disk surface is to be charged nega-

tively, then the ionization behind the disk would carry positive ions toward the back of the disk surface as bound charges, while the electrons of ionization would travel toward the backing plate. The region between disk and plate is highly stressed because the space charge due to the corona discharge decreases the initial potential difference between comb and disk, thereby increasing the gradient and potential difference between disk and plate. Since the dielectric constant of the disk is much greater than that of the air (about 5 times), practically all the voltage will be across the air, until the charges of ionization redistribute the potentials of the various surfaces between comb and plate in a new and indeterminable plan.

The positive charges on the back surface of the disk will, then, be carried around and around, always being replenished should some of them leak off or become neutralized. When the comb collector extracted most of the electrons from the disk, the existance of the positive ions on the back of the disk served to induce negative corona fromthe probing point.

Remedial action was possible in two ways: First, by placing a good insulating surface over the backing plate so as to prevent conduction currents in the

metallic backing plate circuit and thereby effect subsidance of ionization, and Second, by increasing the corona voltage, meanwhile removing the backing plate from the disk in order that the region from disk to plate be not overstressed. This second method proved fruitless. The first method, however, after extensive experimenting to determine the correct type and shape of insulating surface to place over the backing plate, proved most efficient, since it allowed the machine to develop twice the current output obtainable without the insulated plate, and consequently the maximum voltage of the machine was increased due to the increased current capacity. The most satisfactory insulation seemed to be hard rubber and mica. Hard rubber was chosen because it is easier to fashion and to work with. The area of the insulator necessarily had to be much greater than that of the metal plate. Otherwise corona and ionization from the plate extending around the edges of the insulation took place.

With the new charging arrangement, ionization between disk and plate could not exist except for the transient occurring when the corona excitation voltage is applied to the complex series of dielectrics between comb and plate. This transient ionization

allows the various dielectric surfaces to assume their equilibrium operating potentials, which are, of course, different from their free-space values (potentials due to positions in electrostatic field). Thus a small surge of positive charge (using the previous example) travels toward the back surface of the disk and an equal negative charge travels toward the insulating surface on the backing plate, thereby relieving the electrical stress on the air in the backing plate region by redistribution of charge and potentials. A high gradient therefore exists in the insulation over the backing plate, and this potential drop is useless practically. A higher excitation must be used with the new charging system than withthe old and inefficient system.

The practical absence of the positive charges from the back surface of the disk allows the collector system to function properly. Thus the output of the machine is increased.

In the final model of the generator, the collector comb in the terminal was used without placing it in a small Faraday cage to stabilize the potential to which the collector and backing plate would rise. Various types of cage were used with the comb, but none effected any increase in performance of the generator.

The probable explanation for the lack of effect of the cages is that the large mass of wood (undoubtedly a bad insulator) close to the disk masked the effect of the metallic cages which were used. In spite of theoretical advantages arising from enclosing the collector in a cage to stabilize its operation, it nevertheless remains a fact that generators have worked exceedingly well without the cage when the collector is made of a large mass of metal (metal rod, etc.) with points protruding toward the charge-carrying surface. In case the collector is but a small wire, then undoubtedly a cage must be used to prevent any tendencies toward erratic operation due to external disturbing factors.

The distance from collector to disk materially affects the amount of charge collected, the closer the points, the greater the current. This result confirms theory. Under actual conditions, the distance is about 3/32 inch between points and disk.

8. Operating Characteristics of the Machine.

The theoretical maximum amount of current obtainable from the generator was calculated (page 14 ) to be 690 microamperes at a disk speed of 2800 rpm. Under actual operating conditions, the maximum current was

320 microamperes, which was obtained upon short circuiting of the terminal to ground. Without using the hard rubber insulation over the backing plate at the charging point, the maximum current was reduced to 150 microamperes, demonstrating the efficiency of the hard rubber insulation. The maximum voltage developed was 220 kilovolts, rapidly decreasing as load is applied to the terminal. At 220 KV, intermittent breakdown over the surface of the disk along the descending charged area and breakdown directly from terminal to hub assembly and then to ground indicated that the size and location of the terminal had been chosen quite correctly because all paths from terminal to ground offered approximately equal resistance to breakdown, and, furthermore, the rather definite breakdown voltage of the generator apparently coincided with the corona limited voltage of the terminal. The corona limited voltage for the terminal of the machine is calculated to have a theoretical maximum of about 300 kilovolts.

$G = \frac{V}{r}$ where $G$ = 30 KV per cm., maximum,
and $V$ = voltage in kilovolts,
and $r$ = radius of terminal in cms.

$\therefore 30 = \frac{V}{4 \times 2.54} =$ $\therefore V \cong 300$ KV, max.

In designing the machine, two-thirds of this maximum value was assumed to be the value to which the terminal would rise before corona from its surface started.

The problem of placing a variable load on generators of such high voltages without resorting to elaborate devices is an extremely difficult one. A corona load upon the generator is the simplest and works quite well over certain ranges of voltages and currents, but at critical voltages sparking to the corona device results, rendering the method useless at these voltages. A variable high resistance such as the alcohol-xylene type is effective at low currents and high voltages, but the nuisance of changing the concentrations of xylene and alcohol a t each reading to change the resistance is intolerable. The two methods working in parallel is useless because the range of currents drawn by a set of corona points is very large, starting from zero and increasing to the value at which sparkover takes place between terminal and corona device. Incidentally, all current reading devices should be protected by a neon lamp and resistor combination to prevent damage to the instrument during surges which are caused by breakdown of dielectrics in the system, usually air. The most

accurate and versatile load would undoubtedly be a vacuum tube with an ion source whose emission could be varied. The simplest ion source is, of course, the thermionic emission of electrons. The generator would have to operate at positive potential with anode of the vacuum tube connected to the terminal in order that the variable emission electron source might be at ground potential. By measuring the emission current and the charging voltage, meanwhile maintaining the generated voltage constant by spark gap determination, the load characteristics of the generator may be determined, provided various spark-gap settings be used. The meters would have to be placed at a suitable distance from the machine and protected by a large lead screen because as the ions (electrons) travel toward the anode they would acquire more and more kinetic energy which would be dissipated at the anode. Some of this energy would be converted into quanta of X-rays whose energies would have a maximum value corresponding to the electron-voltage of the tube. Although the efficiency of the X-ray production would be low, enough radiation would exist to prove deleterious to the health of the experimenter if he werenot provided with the absorption protective device.

Loading of the generator was attempted with a corona device but the range of load currents was not great enough to be of any importance. The maximum current which could be drawn with corona points was only 80 microamperes because sparkover resulted when the load was moved closer to the terminal in an attempt to increase the load current. Another difficulty arose in connection with varying the charging voltage, since the addition of insulation to the backing plate made it necessary to increase the excitation from 5000 volts to about 15,000 volts. There was no device in the laboratory at the time which would provide a variable voltage up to 15 KV except a large belt type Van de Graaff machine designed for operation at voltages of the order of 700 KV. Obviously the accurate adjustment of this unit to 15 KV and lower was difficult. A 5000 volt kenotron set was available but as corona did not start until a voltage of about 4000 was placed on the exciting mechanism, the range of observation was severely limited.

Conduction losses at the high voltages down the supports, etc., amounted only to a few microamperes, the greatest losses occurring through corona from weak points on the terminal and terminal supporting studs. The windage losses were by far the largest source of energy losses, amounting to 0.55 kilowatt at 2800 rpm.

Another most interesting effect was discovered after the modified charging device was used. It has been previously related that a Van de Graaff generator was the only means of excitation after the insulated backing plate was installed. The voltage of this exciting generator was controlled by a series of corona points set at a variable distance from the generator, including short circuit position. When the exciting machine was shorted after excitation of the disk generator, it was noticed most strikingly that the disk machine built up a very high voltage of opposite polarity to that to which it had previously been excited. That is, after normal operation at a predetermined polarity, the short circuiting of the charging comb caused the machine to generate voltage of opposite polarity. Investigating this curious effect it was found that the distance from backing plate to the disk critically affected the operation of the apparently self-excited generator, most potent operation resulting when the hard rubber and plate were very close to the disk. It was further noticed that the output of the machine decreased slowly with time, falling to half voltage in about one-half hour. The data afforded by the investigation indicated that the position of the backing plate mechanism was responsible partially for the peculiar effect, and, further, that

residual charges upon some dielectric surface were responsible for exciting the machine, the amount of inducing charge decreasing with time due to leakage in the dielectric or to neutralization by charges of opposite sign. The most probably explanation of the effect is that, assuming negative initial excitation, negative charges from the transient ionization of the air between disk and hard rubber are bound on the surface of the hard rubber because of its relatively good insulating properties and cause a gradient at the grounded comb inthe opposite sense to that which was applied by the initial excitation. The positive charges on the disk from the transient ionization would have been practically eliminated by leaka ge or neutralization because the bakelite was not nearly as good an insulator as the type of hard rubber used onthe backing plate. The distance of the hard rubber from the disk, then, varied the gradient at the spray comb, thereby varying the output of the generator.

The generator in its final form functioned as was anticipated and was truly a smooth-running machine.

In summary, the generator was designed for 200 KV a nd a current capacity of about 300 microamperes, with a 5.5 inch charged band on a 30-inch disk rotat-

ing at 2800 rpm. The maximum voltage obtained was 220 KV and the maximum current was 320 microamperes.

9. Relative Merits of Disk and Belt Generators.

Disk and belt machines have been shown, as one result of this research, to operate with equal efficiency electrically, if electrical efficiency is assumed to be measured by the ratio of optimum operating output to theoretical maximum output. The mechanical problems and handicaps which must be overcome, however, before the disk machine attains its highest output place it at a decided disadvantage, from the construction and adjustment viewpoints. Each disk must be carefully selected and handled to insure maintenance of a plane surface which is so essential to its correct mechanical operation. Belts may be handled with no especial care at any time. In case the disk must be removed from the machine, the whole generator must be practically disassembled, whereas belts may be simply removed by removing only the two pulleys over which the belt travels. The disk machine has no pulleys which must be carefully balanced to reduce vibration at high speeds, but the pulleys in the belt machine serve a dual purpose. The first is that of defining the path of the belt and to impart

motion to the belt, whereas a disk must usually be driven from its center, which is usually at a high potential. The second purpose of the pulley is to provide an electrode fro the corona excitation device, a n electrode which has a high degree of effeciency when compared with the complications arising from the same problem in the disk machine.

Disk generators are inherently low voltage machines of the order of 200 KV when compared with the millions of volts attainable with belt generators. The reason is, of course, that the size of the disk must be limited to a diameter of not over three feet for safe mechanical operation. Belts may be made as long as desired meanwhile increasing the size of the terminal to take advantage of the increased strike distance to ground. This conclusion that disk generators are suitable only for low or moderately high voltages (200 KV) is in direct disagreement with that expressed in an article[1] by Dahl wherein he describes experiments performed at the Carnegie Institution of Washington on disk-type electrostatic generators while this research was in progress at M. I. T.. Dahl states:

> "For very high voltage installations, disks appear to offer distinct advantages over a belt-charged machine of the Van de Graaff type. Rotating disks are permanent, are not subjected to any appreciable wear, and give high linear velocity at low revolutions per minute. The charge carrying surface is greatly concen-

[1] C. Dahl, Rev. Sci. Inst. 7,254-256, 1936.

> trated, tending to reduce the dimensions of the generator. As the power required for a given output in electrostatic machinery of existing types is largely determined by wind resistance, the disktype will probably consume less power because less surface is exposed for dragging of air with the disks than with a belt drive. In cascading for very high voltages it is natural to mount the cascading units ina vertical column on electrically separated platforms properly corona protected, the whole cascade being surmounted by a mushroom-shaped corona cap as dictated by the ordinary requirements and practice of corona prevention in high voltage work."[8]

It is not true that disks are permanent, because they always warp with time. This renders them susceptible to appreciable wear because their warped surfaces would strike the sharp points of the collecting mechanism. It is furthermore incorrect to say that the charge carrying surface is greatly concentrated because the amount of charge which can be placed on a unit area of the surface is the same for either belt or disk. Only a small band can be charged in a disk machine whereas the whole width of a belt can be utilized. Therefore, the disk must rotate very fast to compensate for the restriction in charging area. Belts can be made as wide and as long as desired and every square inch of its surface is utilized. Most of the area of the disk, however, is not used to convey

[8]R. S. I. 7,255.

charges, and the size of the disk is limited to not over three feet.

The windage losses of disks and belts are the same, as proven in this thesis. Therefore the efficiencies of the two types of generator are not affected by windage differences.

Mounting disk generators one over the other to make a high voltage cascade-disk machine is a very impractical idea. In the first place, there would be too many charge transferring regions and the efficiency of the whole cascade would be the product of the efficiencies of the individual disk collecting and charging mechanisms. Secondly, the distance occupied by the diameter of the disks could be better utilized by replacing the disks with a belt of width equal to the diameter of the disks. Third, the belt machine obviates using any intermediate potential apparatus which is necessary at the cascaded regions of the proposed high voltage disk generator. Fourth, cascading apparatus destroys the uniformity of field obtainable from terminal to ground in the belt machine. Fifth, it would be found upon trying to design a cascade-disk generator that very many more mechanical and electrical problems would be encountered than anticipated from preliminary speculation.

It now appears that belt generators may be made equally compact to disk machines because the width of the disk materially increases the volume of the space occupied by the machine. If a belt width equal to the disk diameter were used and made to move at a speed of 6000 feet per minute, the current output would be about twice that of the disk machine having a disk speed of about 3000 rpm; yet both occupy the same space. Furthermore, such belt machines are much neater in appearance and much easier to construct than the corresponding disk machine. The high voltage terminal for the former is easily made and is provided with a removable cover to facilitate adjustment of the collector arrangement. No such arrangement is possible with the single-disk machine unless an extremely awkward and bulky terminal is used. Many of these problems may be overcome in the multiple-disk machine, as will be demonstrated in Chapter III.

Because the charge carrying surface rotates, part of the charge along a given radial line enters the terminal at a different time from that at which another part does. The accomodation of charge on the disk surface to the space potential between terminal and ground is obviated in the belt machine because

all parts of a charged band enter the terminal at the same instant and are always at a potential in agreement with that corresponding to the gradient down the "column" of the machine. The correct potential distribution in the belt machine is easily obtained by a leakage down the supporting column wall. There is no corresponding column in the disk machine and its potential gradient cannot be effectively controlled.

Relative humidity of the atmosphere about the belts has a marked effect upon their charge-carrying ability, but, as nearly as could be determined on the disk machine, the relative humidity at the disk surface had no effect upon its functioning. This is an advantage of the disk machine but it actually cannot be called a disadvantage of the belt machine because the belts are usually surrounded by an enclosure, the interior of which is easily conditioned to low relative humidities by heating and use of hydroscopic materials such as $CaCl_2$ or silica gel. Furthermore, the enclosure allows a uniform sheet of leakage charge to flow from terminal to ground to produce uniform gradients at the belt surface.

The windage losses for both types of machines are approximately equal, in spite of the high velocity

of the peripheral regions of the disk. The smoothness of the disk surface, its freedom from axial vibration due to warping, and the variation of surface velocity from zero at the hub to a maximum at the edge, all contribute to maintaining the windage loss at a minimum. Propellor action from a warped disk consumes large amounts of power. The disk must be as free from warp as possible, also, in order that the collector comb current be not modulated by an alternating current of frequency equal to that of the warped surface in passing the comb. For a disk rotating at 3000 rpm and having a simple warp, the frequency of the alternating current component of the collector current would be 50 cycles per second, the amplitude depending upon the amount of warp. The harmonic content will depend upon the shape of the warp.

In the belt machine the distance between comb and belt is constant and therefore no modulation can result, unless belts with bad joints are used. A bad joint in the belt will cause the belt to try to leave the pulley surface, thereby decreasing the distance between comb and belt and affecting the current to the comb at belt frequency. The joint may also different charge-carrying properties from the rest of the belt material, further affecting the collector

current. The collector current, however, affects only the voltage of the collecting mechanism, which is the factor which controls the output of the machine. Therefore the collector action is reflected into the output of the generator. Experience, however, has overcome such problems in belt machines and a high degree of steadiness is obtainable from them.

# PLANS OF SINGLE-DISK GENERATOR.

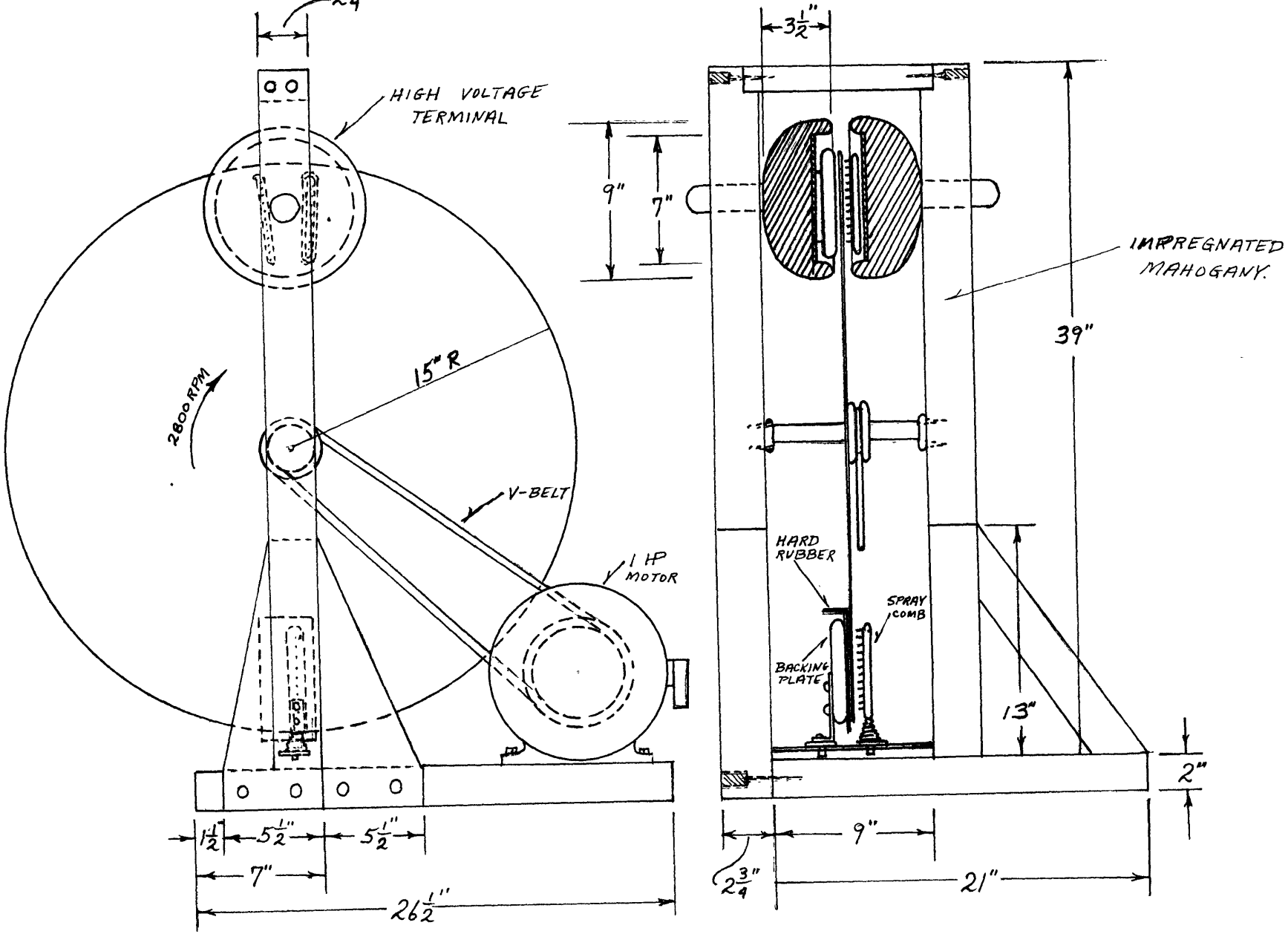

# CHAPTER III.

## MULTIPLE-DISK GENERATORS.

The current capacity of the generator is dependent upon the area of charge carrying surface which enters the terminal in unit time. Provided that the maximumallowable charge density is on the surface, and that the maximum safe surface speed is reached, the only means of increasing the current capacity of the generator are, first, to employ more charge-carrying surfaces, and, second, to increase the dielectric strength of the medium surrounding the surfaces, or both. The first method will be discussed in this chapter and the second in Chapters IV and V. There are two ways to increase the strength of an originally atmospheric or gaseous region: first, to increase the pressure, and second, to decrease the pressure to a vacuum. Each of these two methods is unique enough to command individual consideration, even though it is merely the change in pressure of the medium that is affected.

The construction and design of a multiplt-disk generator is identical with that of the simple disk

machine with the extremely important exception that adjacent disks must rotate in opposite directions if the advantages of multiple disks are to be derived. The principle which affects this design proceedure so materially was postulated in Chapter I on the discussion of multiple-belt machines. Surfaces of positive charge must face surfaces of negative charge if the maximum amount of charge is to be placed on every surface in question, because the total electrostatic flux density outside the surfaces cannot exceed the breakdown strength of that medium. If multiple disks were rotated in the same direction, all negatively charged surfaces would be on one side and all positively charged surfaces on the other. The charge would build up on the surfaces on one side until the total amount of charge reached that necessary to break down the medium normal to the outside surfaces. It would be as though only one very thich disk were receiving the charge.

In his experimentation on disk-type electrostatic generators, Dahl did not consider this theoretical technicality with the result that the output of his two-disk machine was normally scarcely more than that from a single disk machine. Dahl used two disks rotating in the same direction and he stated that:

"It was found that if a flap of material like thin cardboard or silk was mounted so as to cling to the surface of the disk for some distance in the direction of rotation away from the grounded electrode, the efficiency is further increased by 30 percent over the value above. The action of the flaps probably is to give the surface additional charge by friction. However, as these flaps constitute a mechanically weak feature, it is not practical to incoporate this effect in a permanent serviceable installation.

"A curious effect is noted if a grounded row of points is brought up near the flaps, in the vicinity of the quarter of the disk leaving the high voltage electrode. By moving these points around for maximum effect a still further increase in current of 43 percent over that available with the flaps is possible. This effect is also present to a lesser degree if the flaps are removed. Because of the severe voltage limitation introduced by the grounded points, this effect can probably not be taken advantage of in high voltage work, but it indicates that there is room for improvement as to the current-carrying capacity of a disk."[3]

Before commenting specifically on the "effects" mentioned in the quotation, it should be pointed out that disks may be rotated in the same direction provided there are earthed conducting planes between adjacent disks. Such conducting planes allow the induction of charge on its surface of equal amounts to that on the disks and of opposite sign, so that negative charges, for example, on the disk will terminate on positive charges on the earthed plane instead of "seeing" the negative charges on the adjacent disks. With the earthed planes between, the

[3] Dahl, R. S. I. 7, 256, 1936.

disks may run in the same direction and may be loaded up with charge until the gradient between the disks and planes equals that sufficient to ionize the medium between planes and disks. It is evident that with such a disk and plane mechanism, the voltage of the machine is severely limited because the earthed plane extends from ground right up to and into the high voltage terminal.

Dahl suggested that the flaps which he used imparted additional charge to the disk by friction. Their real effect on the electrical system is, however, that of simulating an earthed plane of charges opposite in sign to those on the disks. Had the flaps been made of conducting materials instead of silk or cardboard, then the approach to a metallic plane would have been nearer. Metal flaps, however, would not have to touch the disk as long as they were grounded. The row of grounded points served further to create an earthed plane, which in turn would enable the disks their maximum amount of charge. The reason that a small rod should produce an effect on the current capacity is that the electrostatic field about the rod extended over a large area of the disk. Those regions of the disk which were closest to the rod were capable of carrying more charge, and if the field extended sufficiently over the entire disk,

then the current output would be increased in proportion to the increased charge-carrying ability of the disk. The effects, then, are predicted by theory.

The problem of rotating adjacent disks suitably in opposite directions is solved by mounting the disks as shown in the plans for the four disk machine. (page 64 ) It is unfortunate that this mechanical condition must exist because the windage losses will be very high compared to what they would be if all disks moved the same way. It is further highly speculative to predict what the windage loss would be at the very high speeds. Extrapolation can not be made on data taken at low speeds for many reasons. A disk rotating alone throws air radially outward consequently causing an influx of air normal to the hub of the disk which diffuses outward radially. Now, if more disks are used close together and rotate oppositely, there will be a tendency toward decreasing the pressure in the inner regions between the disks because there can be no influx of air to prevent the decrease of pressure. The rarefied atmosphere will change its electrical strength slightly, the viscous force on the moving disk, and will tend to bend the outside disks inward due to the difference of pressure on the two sides of the outside disks. The inner disks will remain plane because the pressure pattern on their both sides is the same. This collapsing

effect on the outer disks has actually been observed, although not in connection with electrostatic generators. If, however, thick disks be used, such as the 1/4 inch bakelite used in this research, the inertia forces of the large mass of rotating disk will probably decrease the tendency toward bending to a point which is not intolerable. Pumping holes could, of course, be placed around the hub of all the disks to permit air to enter the inner disk regions and consequently prevent bending the disks. Such holes would weaken the disk materially and it is doubtful whether they are actually necessary in the sturdy bakelite.

The charging system is identical with that of the single disk generator except that more combs and plates are used to accomodate the increased number of surfaces. Inside the terminal the combs are all connected electrically in order that their operation be more stable and that each disk share the proper amount of the load. The adjustment of the spray comb completes the equalization of loading of the disks. The plans for the multiple disk machine disclose a rather unique method of entering the disks into the terminal and also a terminal which allows the easy adjustment of all parts of the collector system. Furthermore the entire high voltage body may be removed as a unit, providing maxi-

mum ease of assembling the generator. It is always desirable to make the opening into the terminal re-entrant, as illustrated on page 17 , but this arrangement would be too impractical for small generators. However, fromthe shape and size of the terminal, it is obvious that gradients are much more uniform than in the single-disk model used in this research. The slotted wooden platform into which the disks interleave is sprayed with metallic zinc inorder to simulate a complete metallic bottom for the high voltage body. It should be considered good practice to use metal-sprayed wood in places where metal can not easily be formed and where there is no mechanical stress.

The hub assembly is completely housed by a cylindrical formation which should improve the electrostatic field conditions at that point. It must be remembered that the assembly is at approximately half the total potential of the terminal, from ground.

The shell should easily attain a potential of 300 kilovolts and the short circuit current (which is the maximum obtainable from these machines) is calculated to have a theoretical maximum of 3.45 milliamperes, which means that about 1.6 milliamperes should be obtainable actually from the terminal at short circuit. The method of calculation was given

in Chapter II, page 14. The current may be obtained by extrapolating the values for the single disk machine regarding the difference in speed of the charging area (which is the same as for the single-disk machine, 5.5 inches), the number of disks, etc., as illustrated in the following equation.

$$\text{current} = .690 \begin{pmatrix} \text{no. of} \\ \text{disks} \end{pmatrix} \left( \frac{\text{speed of disks}}{2800 \text{ rpm}} \right) \left( \frac{\text{width of charged area}}{5.5 \text{ inches}} \right) \left( \frac{\text{speed of area}}{2.2 \times 10^5 \text{ in/min.}} \right). \quad \text{(in milliamperes)}$$

Two two-horse-power direct current motors should be used to drive the disks instead of a-c motors because induction motors start up too quickly, causing excessive stress on the region of the disk between the adjacent screws which hold the disk to the pulley housing. The inertia of the disk is enormous.

The excitation of the generator must be derived from a source capable of producing a voltage variable to 20,000 volts at a current of at least 2 milliamperes. Any transformer-kenotron set of the above rating would be highly satisfactory.

PROPOSED DESIGN FOR 250 KV 10 MA GENERATOR

300 KV OPEN CIRCUIT ; 1.5 MA SHORT CIRCUIT

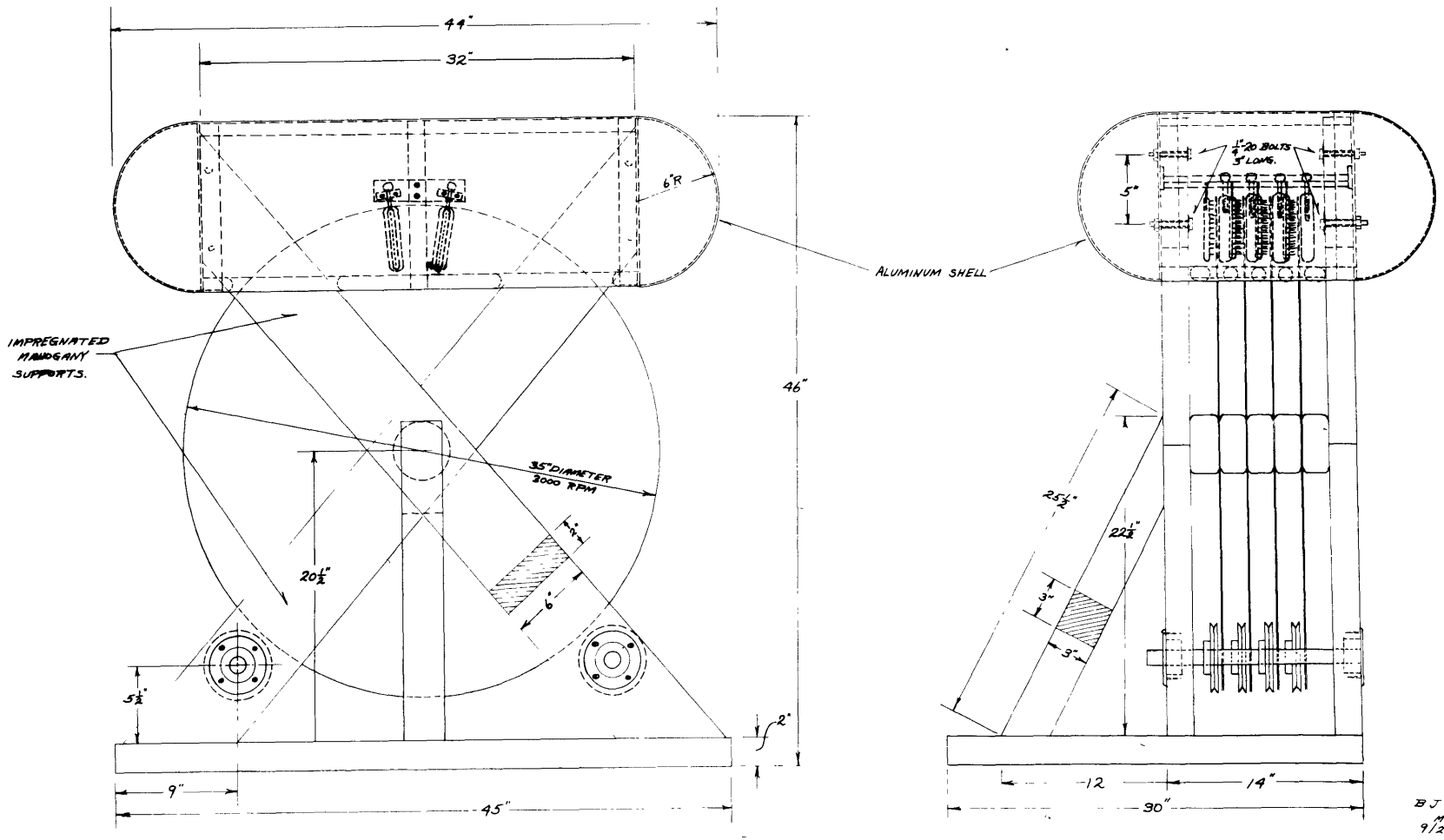


B J COSMAN
M.I.T.
9/24/36

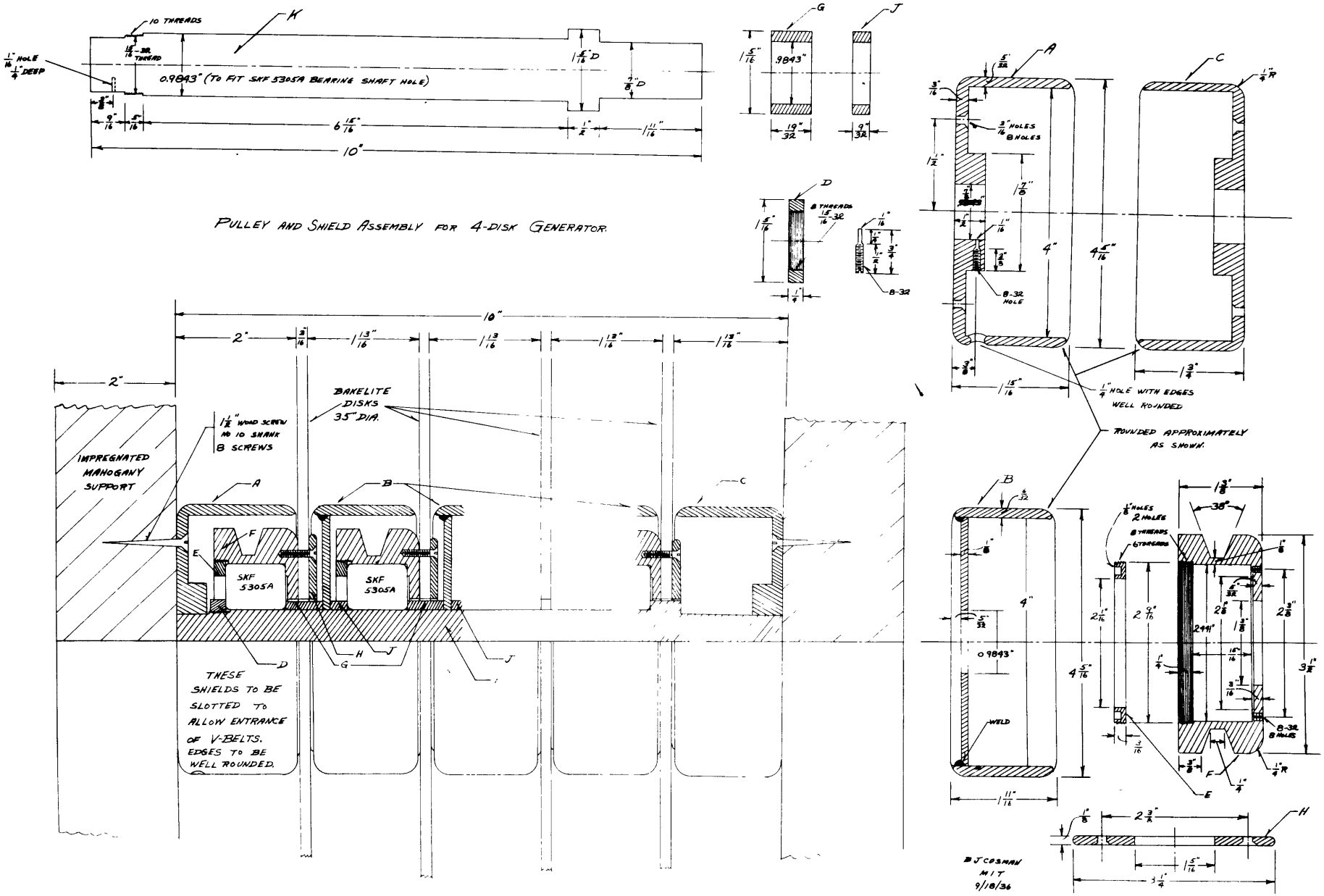
PULLEY AND SHIELD ASSEMBLY FOR 4-DISK GENERATOR.
10 THREADS
K
0.9843" (TO FIT SKF 5305A BEARING SHAFT HOLE)
10"
G
J
D
A
B
C
H
E
F
IMPREGNATED MAHOGANY SUPPORT
BAKELITE DISKS 35" DIA.
SKF 5305A
THESE SHIELDS TO BE SLOTTED TO ALLOW ENTRANCE OF V-BELTS. EDGES TO BE WELL ROUNDED.
1" HOLE WITH EDGES WELL ROUNDED
ROUNDED APPROXIMATELY AS SHOWN
WELD
B J COSMAN
MIT
9/18/36

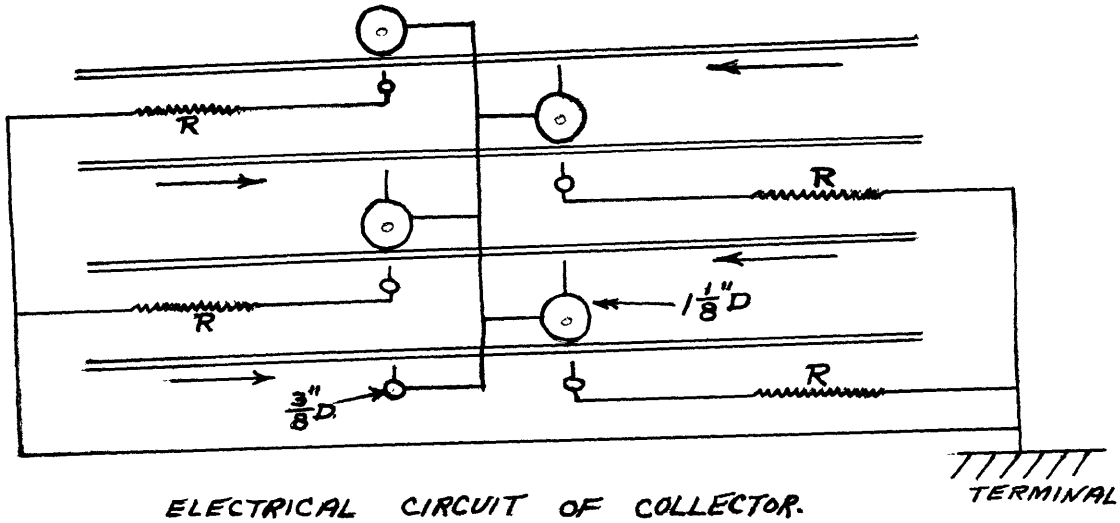


ELECTRICAL CIRCUIT OF COLLECTOR.

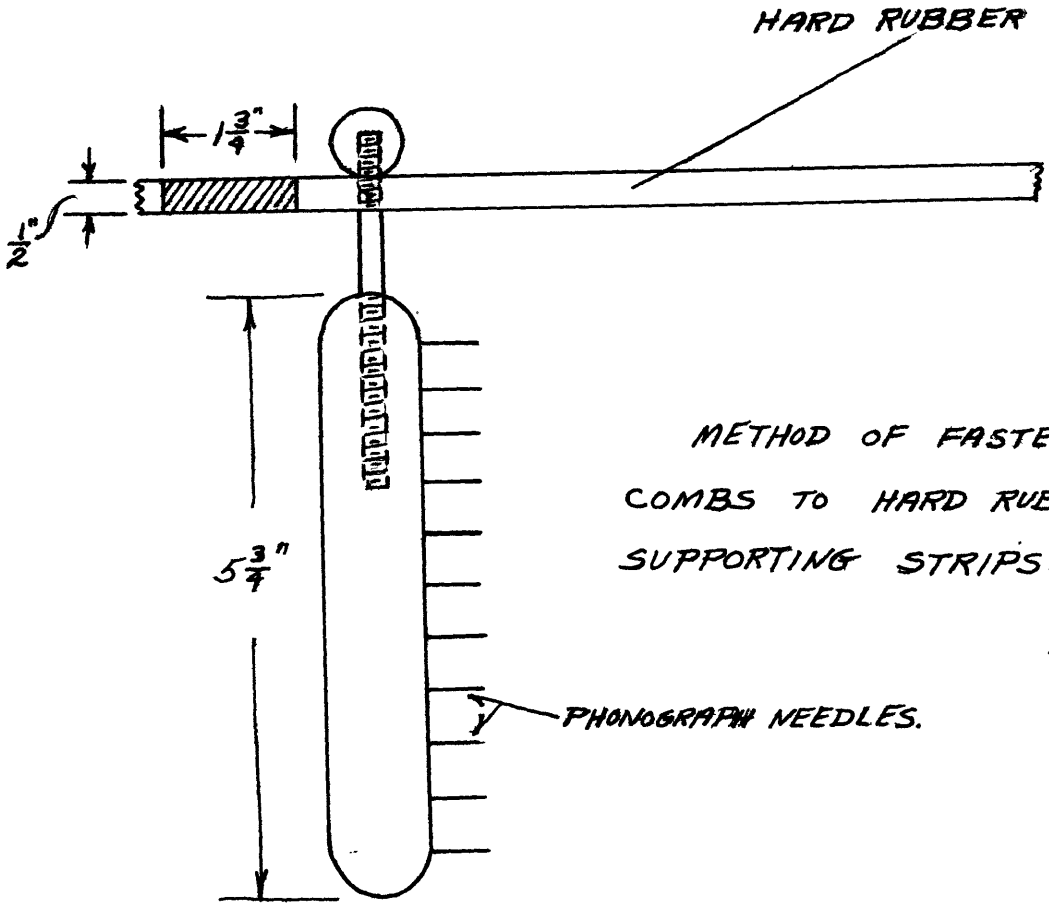


METHOD OF FASTENING COMBS TO HARD RUBBER SUPPORTING STRIPS.

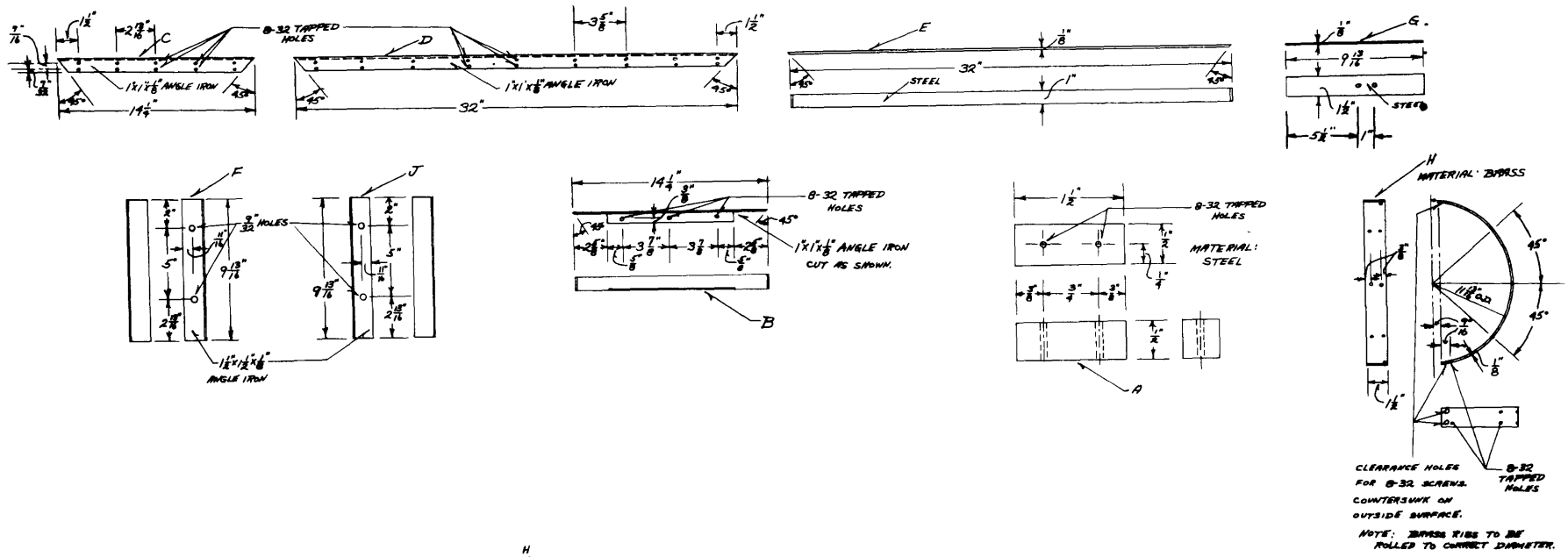


FRAMEWORK FOR HIGH VOLTAGE BODY

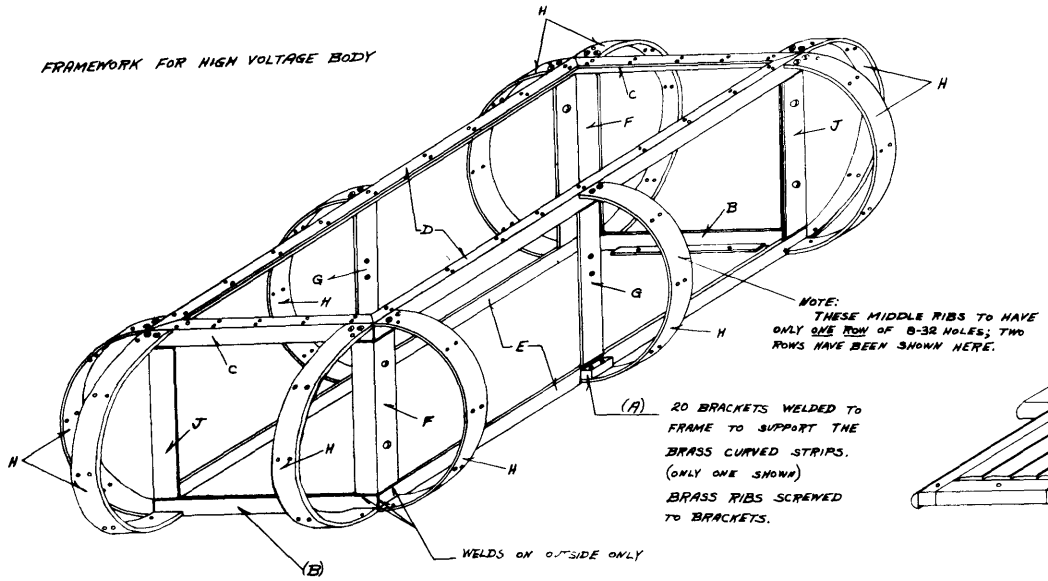


SLOTTED PLATFORM FOR ENTRANCE OF DISKS INTO SHELL
(FITS BETWEEN PARTS "B")

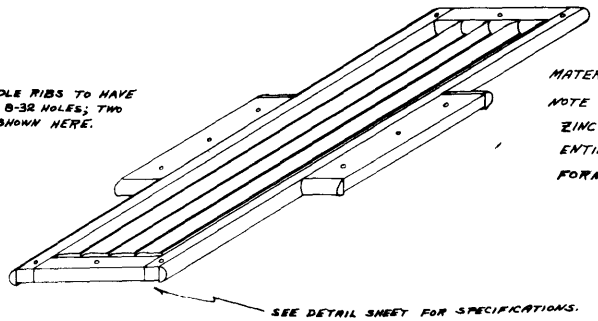

MATERIAL: WHITE PINE.
NOTE SPRAY METALLIC ZINC UNIFORMLY OVER ENTIRE SURFACE TO FORM GOOD CONDUCTOR.

SEE DETAIL SHEET FOR SPECIFICATIONS.

B.J. COSMAN
M.I.T
9/28/36

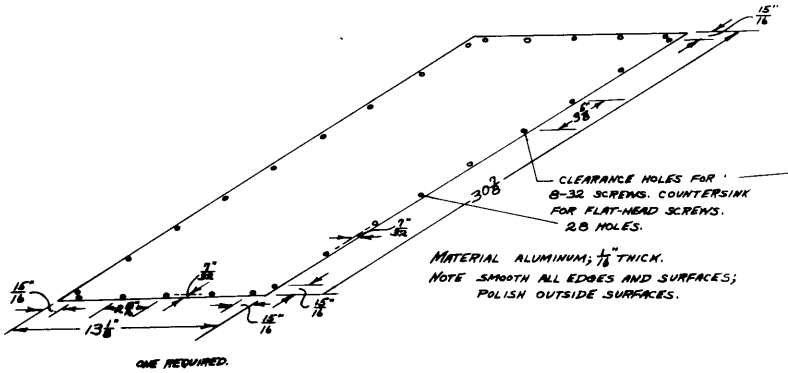


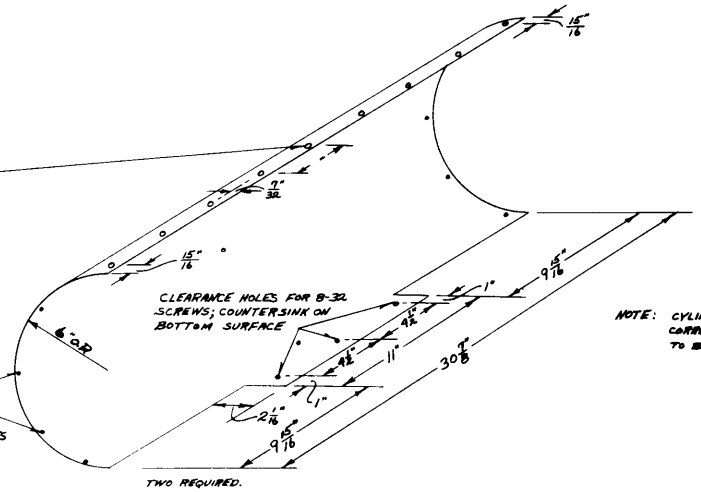


NOTE: CYLINDRICAL SECTIONS TO BE ROLLED TO CORRECT DIAMETER. SPHERICAL SECTIONS TO BE SPUN HEMISPHERES, THEN BISECTED.

HOLES ON CURVED SURFACE TO CORRESPOND TO TAPPED HOLES IN BRASS RIBS (PART H).

SECTIONS SHOWING METHOD OF FASTENING WOODEN PLATFORM TO FRAMEWORK.

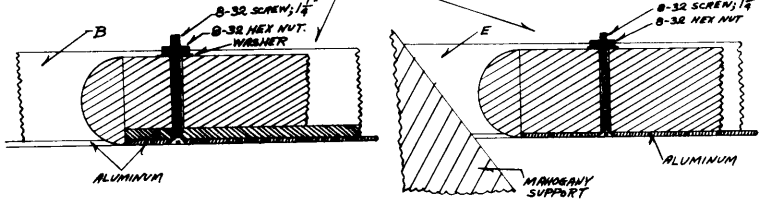


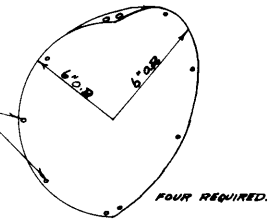


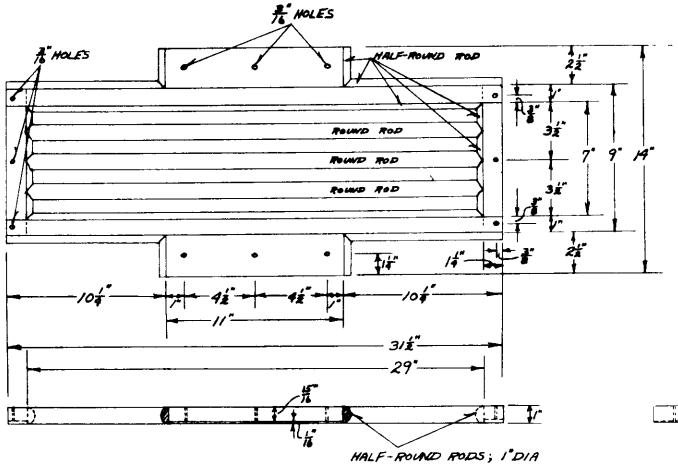


MATERIAL: WHITE PINE

NOTE. ALL PARTS TO BE GLUED AND FASTENED TOGETHER WITH FINISHING NAILS. SANDPAPER COMPLETELY ZINC SPRAY COMPLETELY

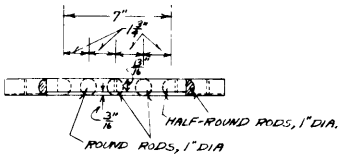


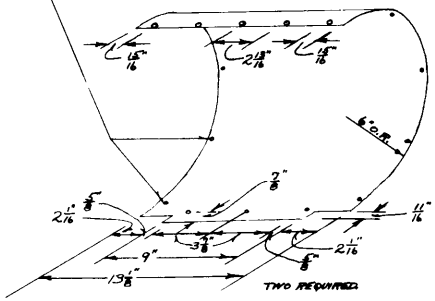


B.J.COSMAN
M.I.T
10/6/36.

## CHAPTER IV.

## DISK GENERATORS IN COMPRESSED GAS MEDIUM.

Any device whose output depends upon the dielectric strength of the medium wherein charges are being transported from ome point to another can be made to deliver greater outputs by increasing that dielectric strength, provided, of course, that the means of effecting this increase do not impair the norman functioning of the machine. This principle is applicable to the disk generator. To increase the output of the machine by the use of compressed gas, it is necessary to house the machine in a tank capable of withstanding the pressure on its inner surface, meanwhile making the tank large enough to prevent electrical breakdown from the high potential apparatus to its surfaces.

The breakdown strength of air and common gases increase linearly with the pressure. Therefore if the whole machine is housed in a pressure medium, both current and voltage are increased by approximately the same factor, resulting in a variation of power output as proportional to the square of the pressure. In designing the tank, strike distances

fron terminal to all other parts of the machine and tank can be considered as being exactly the same as those at atmospheric pressure, because the rise in voltage and current is a result of the increased dielectric strength. If the multiple disk generator of Chapter III were housed in a pressure tank at a pressure sufficient to increase the gradient four times, then the output would be nominally increased to a voltage of more than 1000 KV on open circuit, and a current of about 6.0 milliamperes on short circuit. The voltage generated in such a tank would be utilized inside the tank in conjunction with particle-acceleration tubes in practically all cases. Therefore, there would undoubtedly be no installation which would require the transmission of the super voltage from a region of high dielectric strength and safety into the inferior insulating properties of atmospheric air. If, however, the high voltage were to be utilized in atmosphere, the simplest means of transmitting the voltage would be by means of a large conductor embedded in an insulator of sufficient mechanical and electrical strength to withstand the compressed gas pressure and to withstand the high voltage from conductor to the tank in both atmosphere and pressure. Textolite is wound around a pipe, sur-

mounted by a large sphere in order that the high potential will not be dissipated by ionization of the air around the terminal. The length of the insulator is that necessary to withstand flashover at the voltages desired.

The power necessary to drive the disks will have increased tremendously. First, the power output has increased more than fifteen times. Second, the windage losses have increased at least four times, assuming that windage is linearly proportional to pressure. Adding the amounts of power supplied by the motors, we find about 5 kilowatts of electrical power useful output plus 15 kilowatts of windage losses for the 4 disks at the high pressure, totalling approximately 20 kilowatts necessary driving power. Driving motors of these capacities surely could not be enclosed in the tank due to their large size. Motion would have to be transmitted through a pressure sealed shaft through the wall of the tank.

A very high excitation voltage would be necessary to produce sufficient corona in the high pressure region. At least 50 KV would be needed, at a current capacity of about 7.5 milliamperes.

From the foregoing considerations it can be seen that enormous amounts of power can be obtained from the multiple disk machines in compressed gaseous media, but the disadvantages of the system when it supplies power for use in the atmosphere are as great as the advantages derived from the use of pressure. Too many mechanical problems are introduced by the use of the high pressures that are necessary to promote practical increase in dielectric strength of the medium, especially because the high voltage must be conducted through an opening in the tank. Windage losses are very high, and excitation requirements are likewise severe. The efficiency of the machine in pressure, however, is higher than that of the machine in air because the losses vary as the first power of the pressure (approximately), while the power output varies as the pressure squared.

If the output of the machine may be utilized inside the tank-housing instead of conducting it to the atmosphere, then the system becomes extremely compact for the power developed and also completely shields all external objects from the force field of the high voltage terminal because all high potential parts are inside the metal tank. An X-ray tube could conceivably be erected inside the tank with its anode

at ground (tank) potential according to the method shown in the drawing on page 73 . The X-ray tube is seen to be a separate unit from the generator. The filament of the tube is excited by a small a-c generator mounted inside the high voltage terminal of the X-ray tube driven by an insulating belt from the motor source which is at ground potential. The large force on the top surface of the tube will aid in compressing the vacuum-sealing gaskets between the porcelain bushings and metallic accelerating diaphragms along the tube. Additional compression of the gaskets may be obtained by using tension rods between the ends of the tube.

Respecting the small distances afforded by a practical pressure tank, the voltage of the machine should not be allowed to exceed 700 KV to prevent flashover and breakdown in the X-ray tube. Five milliamperes of current at 700 KV in a 5-atmosphere pressure medium should be realizable. Considering the size of the entire system, this power rating is exceedingly high. Furthermore, the machine is entirely at ground potential, providing the ultimate degree of safety.

COMPRESSED AIR GENERATOR
AND
ACCELERATION TUBE.

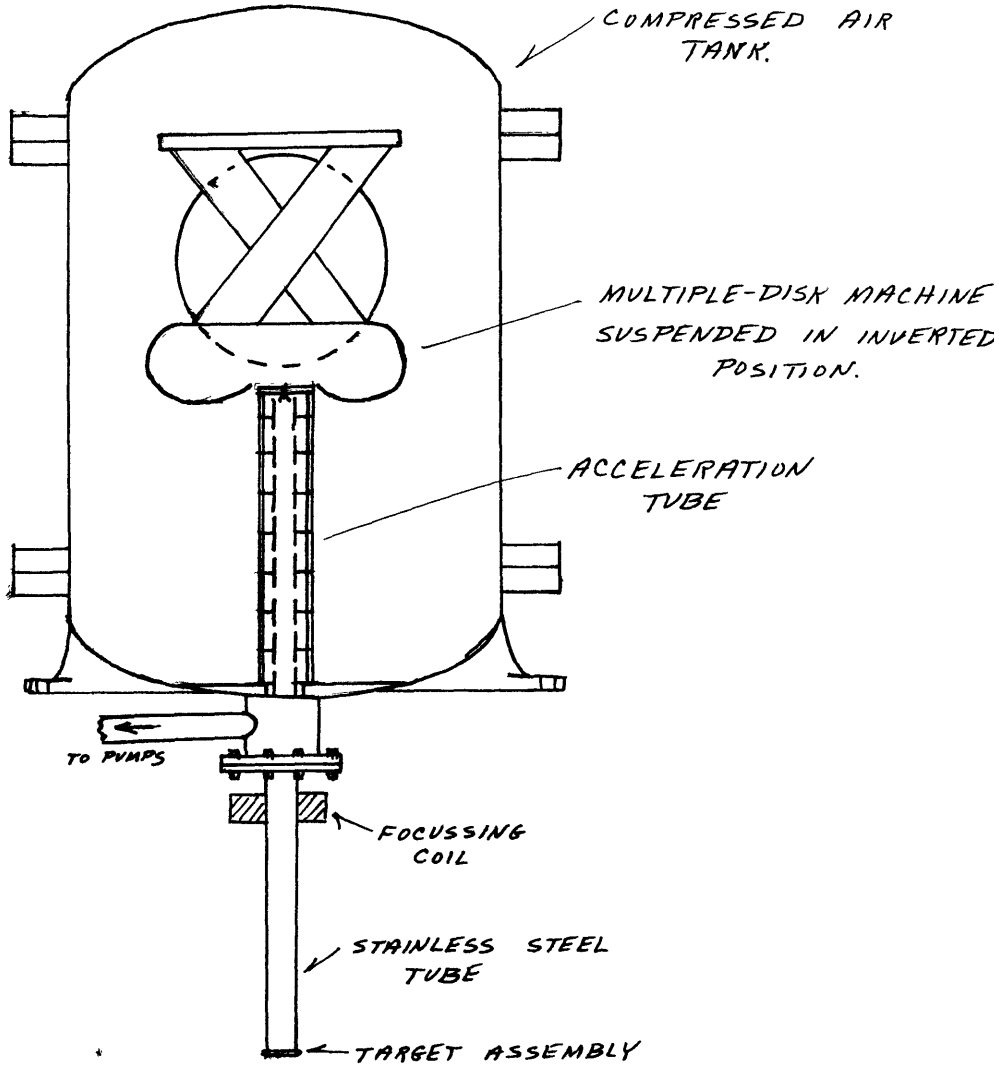

## CHAPTER V.

## DISK GENERATORS IN VACUUM.

In the preceeding chapter were discussed the various factors which had to be considered in connection with increasing the output of the generator by the use of pressure. The contrast between generators in vacuum and in pressure is remarkable because both mechanical and electrical systems in the two instances are so vastly different. The mechanical problems are simplified enormously because the maximum pressure difference on any surface of the system can not rise beyond atmospheric pressure. Therefore, the housing tank is more simply constructed. But the materials which enter into the construction of the generator must be selected with particular emphasis on their vacuum properties. When one considers the variation of breakdown of air with pressure, the following general graphical relation is encountered:

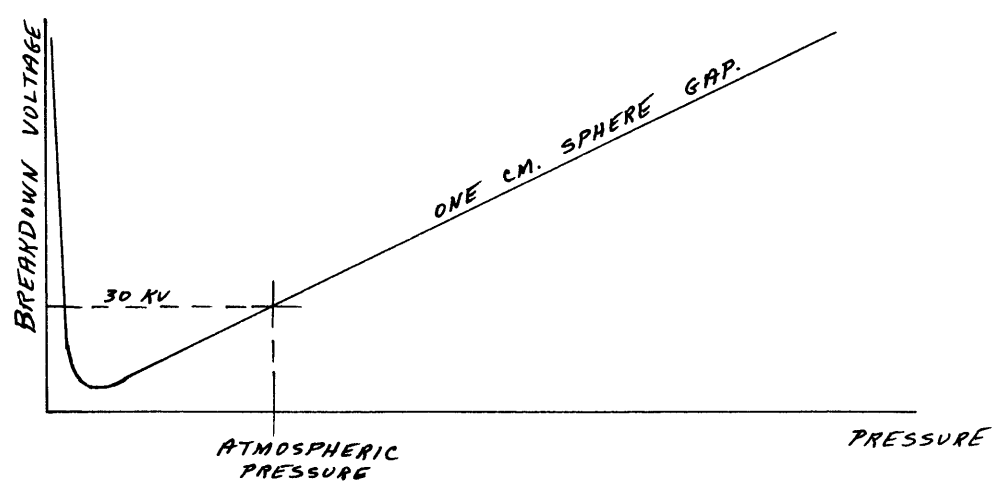

The medium must be evacuated to a pressure of not more than about $5 \times 10^{-5}$ millimeters of mercury before any practical increase in breakdown gradient is obtained. Such high vacua, of course, immediately exclude all materials from the vacuum chamber except metals and such insulators as glass, porcelain, etc. The vapor pressure of other materials would limit the degree of evacuation attainable. There could be one exception to this general "law" of high vacuum technique and that is in the use of bakelite in the vacuum for the disk material. The bakelite could be used if it were not subjected to the high voltage gradients across the disk which cause it to evolve gas incessantly. Porcelain is the only other material, then, which can be used, but it must be operated at slower speeds as its strength is inferior to bakelite.

It should be obvious that the impregnated mahogany and V-belts can not be used in the tank and that other means of supporting the terminal and driving the disks must respectively be employed. The mahogany served to support the disk shaft and also the terminal. The former service must now be performed by porcelain insulators sufficiently strong

to keep the shaft rigid and to withstand the potential of the shaft from ground. Other porcelain insulators must be used to suspend the high voltage terminal. The disks must be driven by a chain.

Electrically, the charging and discharging of the disk is fundamentally different from the corresponding processes in atmospheric and pressure generators because there is no such phenomenon as corona discharge in vacuum. Consequently charging and collecting cannot be performed throughthis medium. The only other method of transporting charges is to provide the disk surface with narrow metallic segments upon which charge can be placed by induction or contact, and from which the charge can be extracted by induction or contact within the terminal, whereon the charge is accumulated. Charging the segments may be effected by thermal emission of electrons from a fila ment adjacent to the disk, the thermions being attracted toward the disk by a plate behind the disk which is at a positive potential with respect to the filament. This latter method, of course, permits only negative charging of the disk.

The size of the segments is rather critical. If they are too wide and have too small a spacing,

then breakdown across the surface segments of the disk will result. If, however, too great a separation is made, a smaller amount of charge will be carried to the terminal.

The operation of the vacuum generator should exhibit the maximum efficiency attainable from such generators, in virtue of the omission of the windage losses. The lack of an elastic medium renders impossible the transmission of noise caused by vibrations in various components of the machine. Only the direct mechanical transmission of vibration to the tank will be audible.

Machines which produce electrical power in vacua are admirably suited to supply power to devices which depend upon vacuum for their operation, as, for example, the X-ray tube. Both generator and sink can be placed in the same tank and vacuum, thereby eliminating considerable auxiliary structures such as vacuum high voltage tubes, high voltage bushings, etc.. In this instance, the target of the tube could be placed at ground potential and the electrons could be focussed directly on the target without intermediate accelerating diaphragms. The filament would have to be excited by a set of vacuum insulated transformers cascaded to

reduce the electric stress between primary and secondary of each individual transformer. Thus the emission can be controlled directly by instruments at ground potential. The output of the tube and generator would depend upon the hardness of the vacuum because the dielectric strength is critically dependent upon the pressure in the extreme low pressure regions.

The merits of pressure and vacuum insulation have been jointly incorporated in a high voltage apparatus designed by Prof. R. J. Van de Graaff and Mr. W. W. Buechner of M. I. T. for use in the production of high energy particles for nuclear investigations. The belt, charging and discharging devices of a belt electrostatic generator are housed in a cylindrical porcelain bushing under high air pressure. The entire generator is housed in a vacuum tank wherein the ion source and acceleration apparatus is also housed. Compressed gas serves to produce a high current output from the narrow belt, while the vacuum enables a high potential to be attained by the terminal.

BIBLIOGRAPHY.


1. K. T. Compton, "High Voltage", Journal of the Washington Academy of Sciences, Vol. 23, pp 277-297 (1933).

2. R. J. Van de Graaff, K. T. Compton, and L. C. Van Atta, "The Electrostatic Production of High Voltage for Nuclear Investigations", Phys. Rev. Vol. 43, pp 149-157 (1933).

3. E. H. Bramhall, "A Portable High Voltage Generator of Practical Utility", Rev. Sci. Inst., Vol 5, pp 18-23 (1934).

4. M. A. Tuve, J. Frank. Inst., 216, 27 (1933).

5. L. C. Van Atta, D. L. Northrup, C. M. Van Atta and R. J. Van de Graaff, "The Design, Operation, and Performance of the Round Hill Electrostatic Generator", Phys. Rev. 49, 761-776 (1936).