Towards a Renaissance of Curved Spanning Structures

by THOMAS HUNTER HARTSHORNE

B.A., Princeton University
1978

Submitted in partial fulfillment
of the requirements for the
degree of
Master of Architecture
at the
Massachusetts Institute of Technology
June, 1983

Signature of author . . . . . .
Department of Architecture, May 6, 1983

Certified by . . . . . .
Waclaw P. Zalewski, Professor of Structures
Thesis Supervisor

Accepted by . . . . . .
Jan Wampler, Chairman
Departmental Committee for Graduate Students

Towards a Renaissance

of

Curved Spanning Structures

by Thomas Hunter Hartshorne

Submitted to the Department of Architecture on May 6, 1983 in partial fulfillment of the requirements for the degree of Master of Architecture.

Abstract

Today, as always, there is a great need for expressiveness in design. There are a multitude of forms which, over the years, have been stripped from the designer's repertoire in the name of economics. There exists a sub-group amongst the lost forms which can be categorized under the heading, "Curves." Where have all the curves gone?

The Dutch de Stijl and the German Bauhaus movements did much to make things unpleasant for the curve in the twentieth century. The ever increasing demand for cheap construction methods brought with it a demand for cheap to build forms. Curves have always been more complex to imagine and more difficult to build than straight lines. The appearance of new arches and vaults were common events in the Renaissance. But, since then the demise of the curve has been slow and unrelenting. Curves are now the property of engineers. We see them used in bridges.

I do not propose to show how to build arches and vaults cheaper than lintels and flat ceilings. I will, however, restate the structural merits of the curve and show methods for understanding the variety of curves and their relationship to several kinds of loadings. In addition, I present an argument for the union of the curve and the

straight line in that modest, but ubiquitous container of humanity, the room; the room with a rectilinear floor plan and a vaulted ceiling. The wedding of these forms has been tried many times before, more often in the more distant than the recent past. Now it is rarely seen, but in a museum or historic building. The juxtaposition of curved ceiling forms and orthogonal floor plans should be revived for it was a lively combination and brought cheer to many.

Thesis supervisor: Waclaw P. Zalewski

Title: Professor of Structures

Acknowledgments

I would like to thank Waclaw P. Zalewski, whose inspiration and encouragement have long been a primary reason and motivation for pursuing my studies at M.I.T..

To Elizabeth Reed, for her patient editing and sustained interest in this project.

To Callie Traynor, for setting me rolling.

A special thanks to Kim Ruoff for her assistance in Rotch Library and for the lending of her necklace for the catenary drawings.

And to my family, for their support during the undertaking of yet another adventure.

"Y así el deber, lo moral, lo inmoral y lo amoral, la justicia, la caridad, lo europeo, y lo americano, el día y la noche, las esposas, las novias y las amigas, el ejercito y el banco, la bandera y el oro yanqui o moscovita, el arte abstracto y la batalla de Caseros pasaban a ser como dientes o pelos, algo aceptado y fatalmente incorporado, algo que no se vive ni se analiza porque 'es así' y nos integra, completa y robustece."

Julio Cortázar
Rayuela

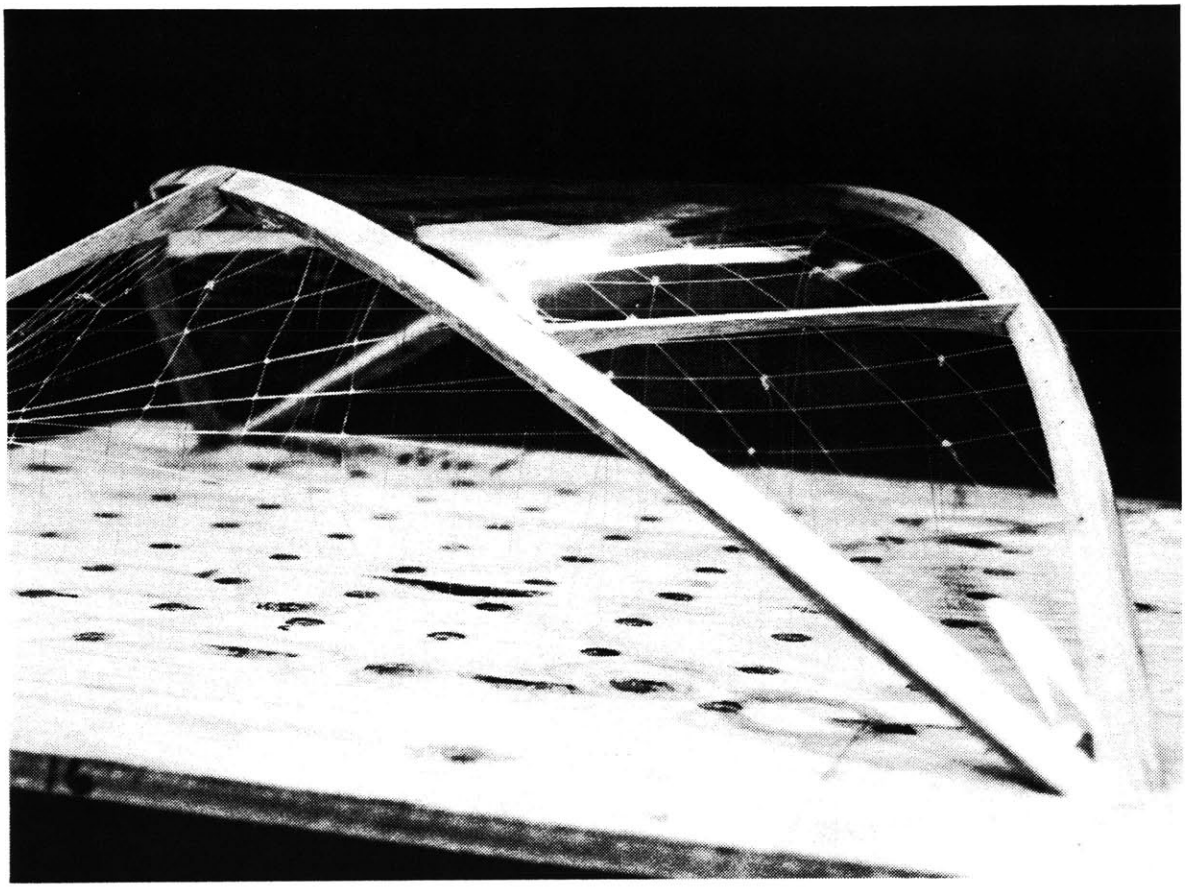

Final Design Competition Entry: Fall Term, 1982
Structural Engineering Laboratory 1.105J/4.315J
Student Designers: Garet Wohl and George Schnee
Professor of Structures: Waclaw P. Zalewski
Teaching Assistant: Thomas H. Hartshorne

Contents

Preface

Why an arch? Arches are beautiful. Curves in general are quite nice. The long neck of a swan, the lines of a 1956 Thunderbird, the S-sense of a woman's body. Curves in architecture deliver a definition to space whose form is somehow less definite than those orthogonal shapes which exist. A right angle is made up of two lines whose construction consists of connecting three points with two straight lines which meet at a right angle. The conceptualization of a curve is not so easy. We needn't restrict ourselves to the shape itself. What the shape cuts out of the landscape is also of interest.

That which is framed by the arch is more difficult to describe than a subject framed by a rectangular doorway. If we are looking out through a door, the top of the doorway might be coincident with the belt-coursing of a building across the street. The jamb might parallel a drainpipe which frames the edge of a window. Since most of the built world heeds the rigor and logic of an orthogonal ordering, it is often an orthogonal composition that makes up the field of view framed by the arch. The arch does not reinforce the vertical and horizontal lines of the buildings in the background, but cuts across the face of things showing a corner of a doorway

here, excluding the corner of a window there. So, how can the curve of the arch be considered beautiful if it often interrupts and moves in counterpoint to its surroundings? Leaving the discussion of aesthetics for later, I'd like to first place before the reader a rough outline of my intentions in writing this paper. With this information he will obtain a better impression of whether or not the entrée appeals to his interest.

I will stay on the curve: at times under, on, and over it, but consistently on the subject of the curve and its structural and aesthetic value to architecture. I'm primarily concerned with how curves function as effective spanning forms; in bridges, and in the floor and roof of buildings. Throughout the course of the investigation I will entertain discussions about those curves which can be categorized under the headings: circles, ellipses, catenaries, parabolas, and freehand curves.

In Medieval, Renaissance, and Baroque times arches and vaults were commonly employed to span openings in walls and to cover space. Over the last one hundred years, with the advent of steel and the redevelopment of concrete, they have been used less and less. Even thin gage sections of steel are very strong. Steel is easily manufactured in linear beam and column lengths, and in a variety of sections. Concrete members are economically produced in linear lengths; prefabricated or cast in place, pretensioned or post-tensioned. Concrete slabs, either with or without steel decking underneath, are readily formed in planes.

Today, in 1983, why use an arch? With the demand for cheap, simple, and rapid means of construction, why go with a form that is not as easily fabricated, connected, supported, or subdivided as the tried and true horizontal beam? First, most people consider arches beautiful. Also, there is the recognition of their economic and structural viability for large spans. In the Gothic Age arched vaulting created a magnificent overhead landscape, and enabled the early builders to construct some of the largest spans to date. Witness, the fan vaulting of King's College Chapel at the University of Cambridge completed in 1515 (Fig. 1).

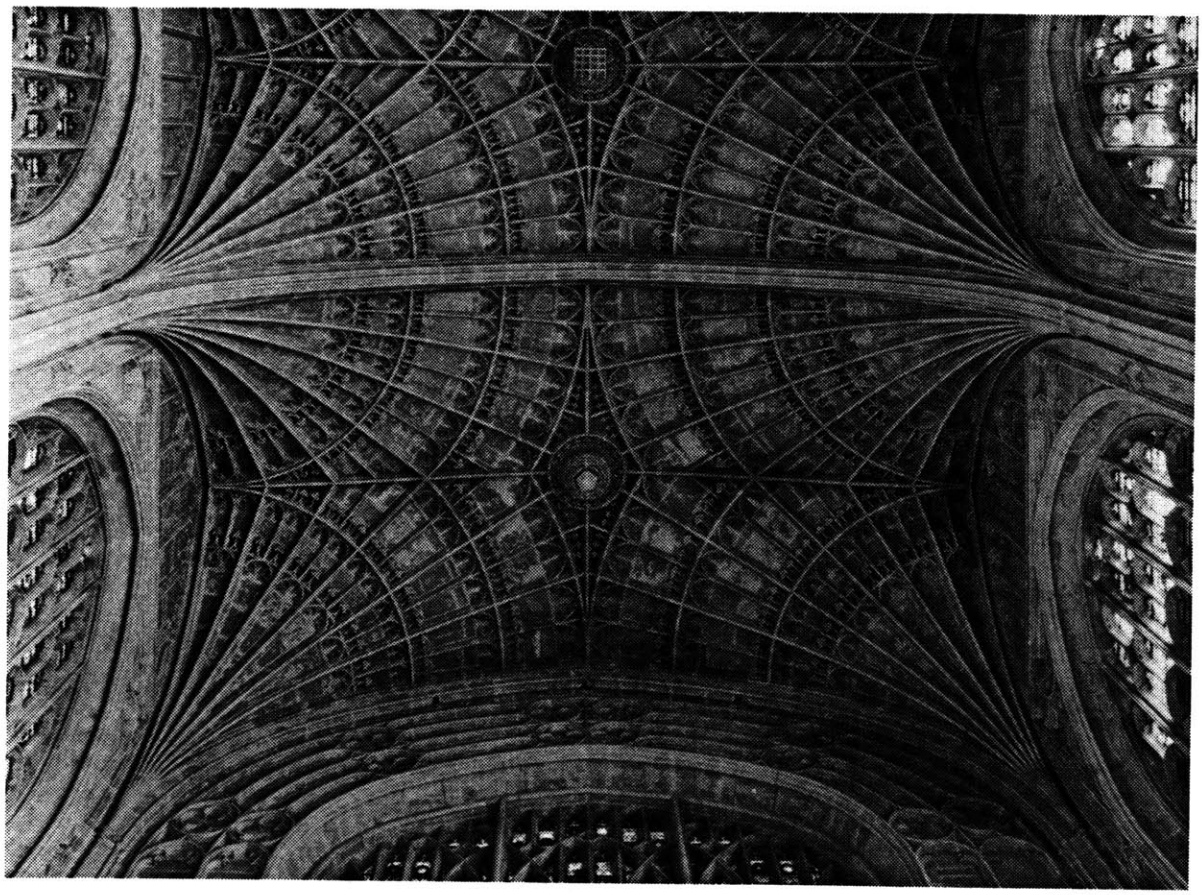

Fig. 1 Fan vaulting of King's College Chapel, completed 1515.

During the boom of the railroads in England Isambard Brunel designed and built two wrought iron lenticular arches, 1,000 tons apiece, whose 465 foot lengths made up the two spans of the crossing of the Tamar at Saltash. Brunel's bridge was completed in 1858 (Fig. 2).

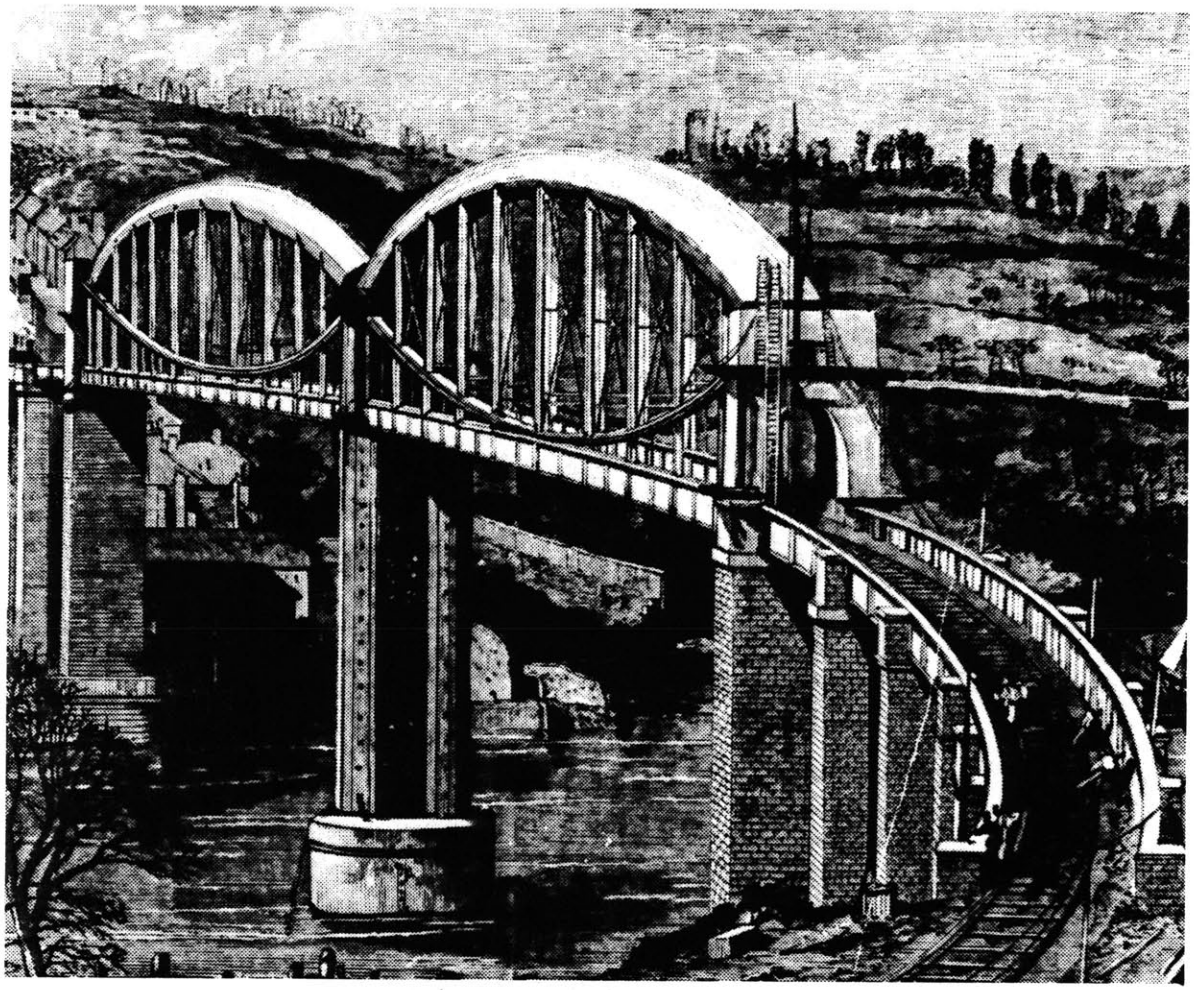

Fig. 2 Tamar at Saltash, Isambard Brunel, completed 1858.

In 1932, the 1,652 foot clear span of the two-hinged steel arch of the Bayonne Bridge in New York State was successfully finished

(Fig. 3).

Fig. 3 Bayonne Bridge, New York State, completed 1932.

Aside from its grace as a form and its capability as a long spanning element, how practical is the arch for the short span, forty feet or less?

Arch and vault construction tends to be more labor intensive than post and beam frame or wall and slab construction. Reasons why have something to do with the chicken and the egg dilemma. Understanding the form and building the formwork necessary to construct curved

surfaces is more difficult than that for linear beams and columns. In modern times with the availability of simpler alternatives, arches have been built less often. Due to the infrequency of construction, the improvements in construction techniques and reduction in costs have occurred more slowly in this area. Also, arches and vaults are less efficient spatially, both in the fabrication and in use. Prefabrication and in-situ fabrication require methods and formwork which take up more space. After they are built they occupy space, both above and below, which people, machines, furniture, or other buildings cannot occupy.

Vaulted or domical spaces are unreasonable to subdivide because of the difficulty of matching partitions to the curvature. Therefore, these kinds of spaces are rather intractable when the time comes for remodeling. One can construct lower height barriers within a vaulted space, but sound transmission is still a problem. Placing ceilings over the barriers denies the aesthetic value of having a vault. And with energy costs an extremely important consideration, one must balance the negative tendency of vaults to act as heat sinks.

If the designer is considering repetitive small span arches, there is a cost saving due to the repetition of forms, process, etc.. But, there is an additional cost over frame construction because one must supply the material and structural means to restrain the arch's outward thrust. Two arches side by side support each other. But what of the end bays? Either they require a significant buttress or the placement of a tie member from end to end to balance these

thrusts. Given these acoustical, energy, structural, spatial, and economic difficulties, the arch and vault are still the most appropriate forms for carrying load over a span. Their appropiateness lies in the fact that they develop the full strength of the material, and therefore can do the job with less overall material than a beam or slab. Later, I will go into greater depth with this comparison.

With these factors in mind, let us proceed to analyze the mathematical and structural nature of curves. Even where arches and vaults are not economically the most feasible solution, their forms may be the best architectural choice. Curves call forth associations with nature. On the outside, they can stimulate and focus the landscape. This is true of the dome. If well designed, inside a curve there is a feeling of containment and place as there was in the womb. Curves celebrate the challenge of changing slope with a continuity and grace not found in angles. They evoke an emotional response and by contrast, offer a heightened appreciation for their linear neighbors.

There exists a large variety of curves which are known to us by their shape and whose dimensions we can compute with fairly simple mathematical formulas. Circles, ellipses, and parabolas are among these. The more complex catenary curve will also be presented because of the importance of the loading which generates its funicular shape. Other curves, such as sinusoidal and curves defined by cubic and higher order equations, will not be discussed here. However, they

too can be analyzed by the following methods.

The value of the following exercises are manifold. I ask the question: What are the loads which correspond most reasonably to the above mentioned curves? Designers are rarely asked this question. Usually, the architect, if he chooses to use an arch or a vault in his design, selects the curve for aesthetic reasons. He then gives the curve, along with the loads specified in the program, to the engineer. The engineer's dilemma in this example is the subject of Chapter IV. If the architect were interested in the structural aspects of design, he might ask himself: Given the program loads and the possibility of using a curved form to support and transfer these loads, what curve would work most efficiently? This is my original question asked in reverse. At present, I want to skirt program issues and focus on the nature of curves for the general information of such an architect in such a situation. Therefore, I will approach the problem from the side of the curve.

What does one mean by "structural efficiency?" First, for both hanging arcs, and standing arches, there will be as little bending as possible in the structure. Loads will be transferred either in tension, for hanging forms, or in compression, for standing forms. In this arrangement the stress is uniform across the cross section. A correct application of the form allows the material of the entire cross section to be stressed to its allowable limit. As a result we can engage less material to do the work than in a beam where the stresses vary enormously. The stresses (stress $= \sigma =$ load/area) will

therefore be of the axial sort. The uniform stresses will develop along the longitudinal axis or "in-line" with the curve of the arch. Bending stresses also develop in line with this axis, but occur directly from forces which are "out-of-line" with the curve of the arch. The relation between the moments caused by loads and the internal bending forces which balance them can be explained with the help of the following analogy.

Find a friend, any friend will do. Consider his body as representative of the body of the arch. To imagine this, think of his body as having a uniform cross section and consisting of a single material such as bone. Have them buckle on a pair of ski boots and lock into a pair of skis, downhill variety. This addition allows us to model a rigid connection to the ground. Now, press down on their head directly from above. Try standing on a chair to apply the pressure. You are inducing a longitudinal force in your friend's body with average stress equal to the force divided by the cross sectional area of their body. Have them hold out an arm rigidly and straight in front of them. With his body resting in a vertical position, press lightly down on his wrist (Fig. 4). You are introducing a bending moment to the body equal in magnitude to the applied force times the length of its arm. If his ankles are steady, his body will suffer a uniform bending moment down to the ankles. His body endures a maximum bending stress equal to the bending moment, M, divided by the section modulus, S, of his body's cross section:

$$\sigma = M/S \qquad \text{Eqn. 1}$$

The section mudulus is a term which defines the geometric characteristics of the cross section with respect to its ability to resist bending action. The curling of your friend's toes as he attempts to maintain balance suggests that the bending stress is experienced down to his feet. The muscles of the feet, legs, and thorax supply the resisting moment equal and opposite to the applied moment. It becomes apparent that friends with larger cross sectional area, and consequently, larger section modulus, have an easier time with this trial.

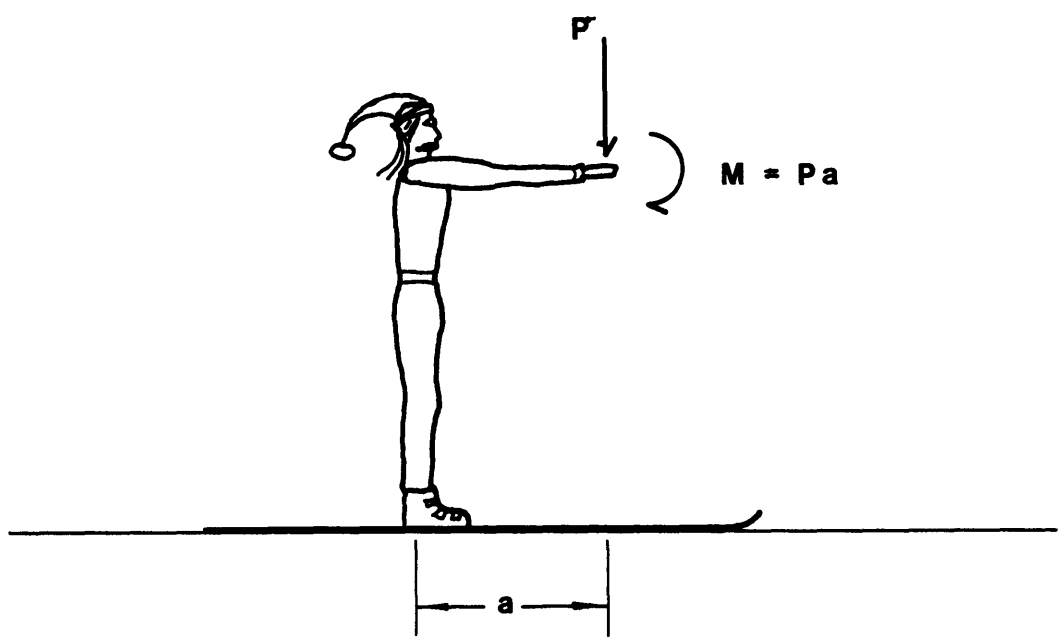

Fig. 4 Moment analogy, ski boots and skis model rigid connection to the ground.

We are better off if the load is applied in a manner which allows the resultant of forces to be transferred without the added burden of a bending stress. The design is more efficient because the arch can be built thinner and lighter. Other characteristics which influence the ability of arches to carry load and withstand stress will be reviewed in the following section, Chapter I.

I. An Introduction to Height/Span Ratio, Curvature, and Pressure Lines

The strength of an arch depends on the shape and its appropriateness for the load, the modulus of the cross section, S, its substance, and the help it gets from its structural neighbors. The latter three parameters will be explained as part of a design problem in Chapter III. Presently, I will introduce several concepts relative to shape including the importance of the height/span ratio, curvature, and the nature of pressure lines.

Consider the simple, symmetrical arch with uniform cross section drawn below (Fig. 1-1). The stress along the longitudinal axes is constant throughout:

$$\sigma = A_{T/A_A} = B_{T/B_A} \qquad \text{Eqn. 1-1}$$

where: A_T, B_T = total reactions at the supports

A_A, B_A = cross sectional areas of the two legs

If the load, P, is increased the resulting reaction forces, A_T and

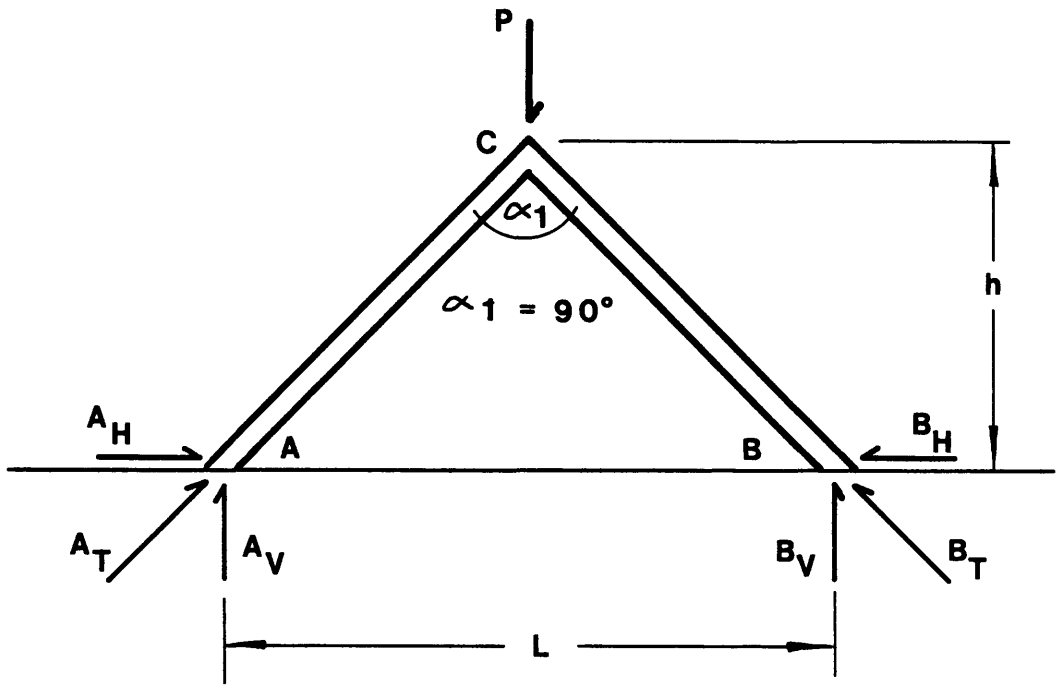

Fig. 1-1 Symmetrical triangular arch with uniform cross section under a point load. Where:

P = load

A_H, B_H = horizontal components of the total reactions

A_V, B_V = vertical components of the total reactions

B_T, will increase proportionally. The stress in each leg will increase by:

$$\Delta \sigma = \Delta A_{T/A_A} = \Delta B_{T/B_A} \qquad \text{Eqn. 1-2}$$

If the load, P, is kept constant and the angle, α, is opened from

90° to 135° (either by lengthening L, or shortening h, or both), the stress in each leg will increase proportionally. The reason for this change is suggested graphically in the following sketch (Fig. 1-2).

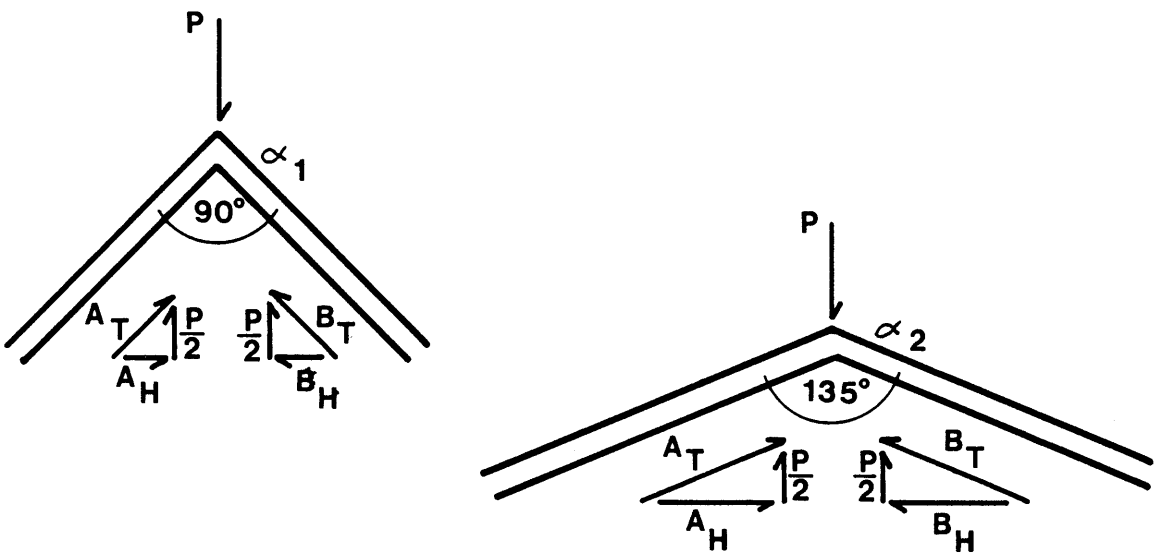

Fig. 1-2 Two symmetrical arches with uniform cross sections, but different apex angles.

As the angle, α, grows from 90° to 135°, the vertical component of each leg, A_V and B_V, remain at P/2 to equilibrate the load, P. The horizontal components, A_H and B_H, of the total reactions, and the total reactions themselves, A_T and B_T, increase to absorb the changing angle. The magnitude of these reactions is fixed by the geometry of the arch and the magnitude of the load. Of course, the forces, A_T and B_T, in reality lie in line with the legs of the arch.

As α approaches 180°, A_T and B_T become infinite, as do the resulting stresses. As α goes to zero, with the height/span ratio becoming infinite, the leg forces approach P/2 and the stresses decrease considerably.

Now, consider a symmetrically curved arch member supporting a point load, P, at the center span (Fig. 1-3).

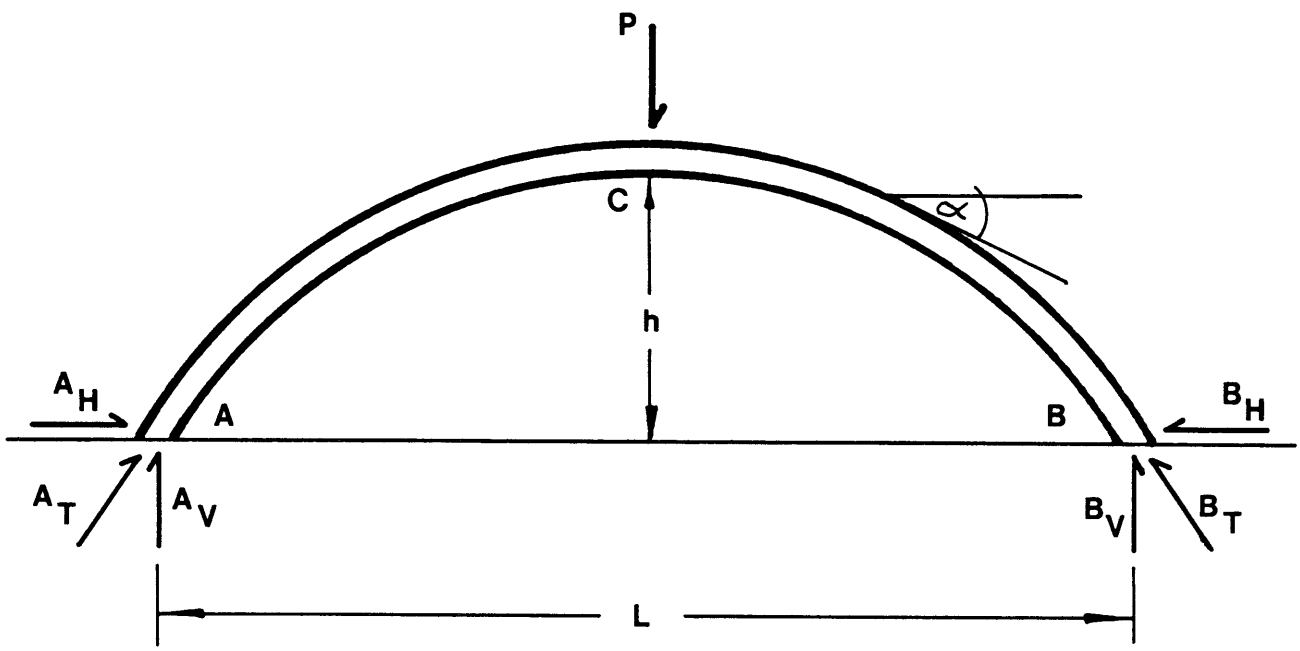

Fig. 1-3 Arch made from segment of a circle, under a point load, P.

For the curved arch the same relationship holds as for the triangular arch. Ignoring stresses due to bending, raising the

height/span ratio resolves in less stress along the longitudinal axis of the arch, provided the nature of the curve is preserved: circle, parabola, etc.. Obviously, the height/span ratio for a circular arch cannot be raised above 1/2, because of the circle's constant radius. The stresses due to forces in-line with the body of the arch increase toward the supports.

For a given height/span ratio, a horizontally distributed load placed over the arch will bring about a stress distribution which varies from the top to the bottom of the arch (Fig. 1-4).

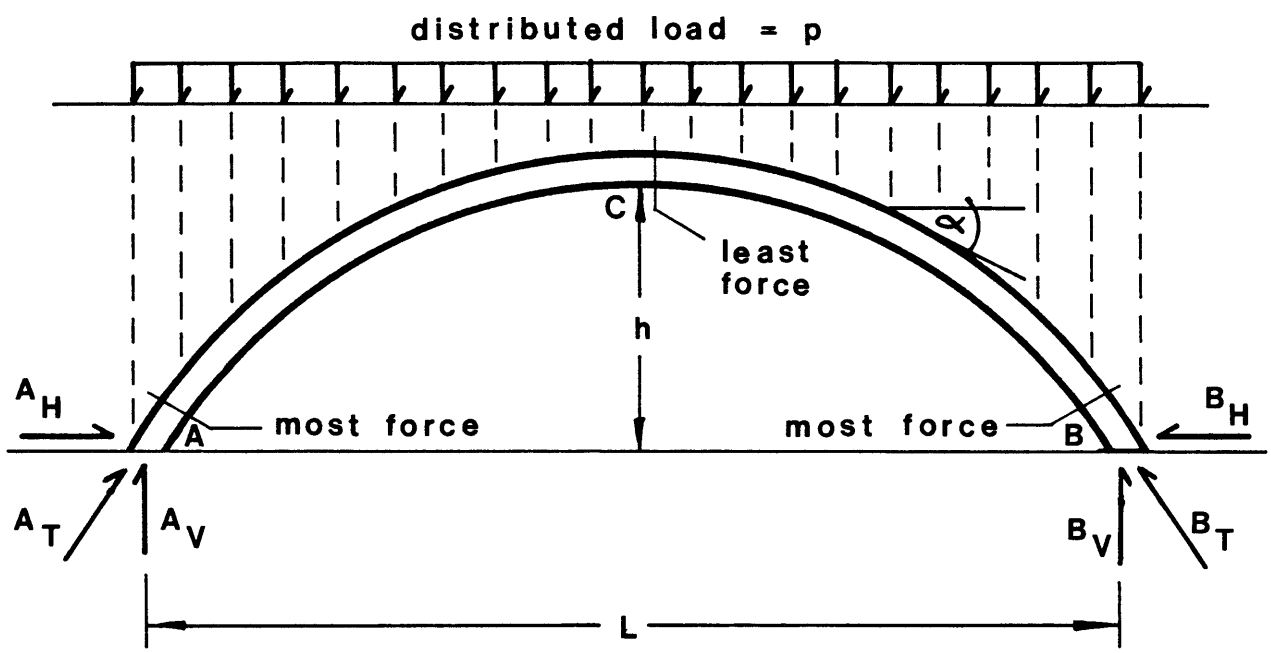

Fig. 1-4 Segmental arch under a horizontally distributed load, P.

Ignoring moment stresses, a distributed load will produce the greatest stresses due to forces in-line with the longitudinal axis at the supports. As the force resultant moves down the body of the arch, as α increases, the addition of further loads can only increase the magnitude of the force resultant and the stress. Increasing the height/span ratio for a given curve will diminish throughout the stresses which develop along the longitudinal axis. Another approach to examining the forces which occur in the arch is through an understanding of curvature.

The curvature, K_i, for a circle is a constant. The radius of curvature, R_i, for a circle is equal to the radius of the circle. Curvature for any curve is equal to the reciprocal of the radius of curvature: $K_i = 1/R_i$. The radius of curvature at any point along any curve, is the radius of that circle which has the same curvature as an infinitesimal segment of the curve which includes the point. The parabola has a changing curvature. As one proceeds away from the apex, the curve flattens out while the radius of curvature at each further point increases (Fig. 1-5).

The parabola has the basic form, $y = ax^2 + bx + c$. where c = the Y-axis intercept and $(-b/2a,\ b^2/4a - b^2/2a + c)$ are the (x,y) coordinates at the apex. The nominal radius of curvature at the apex, R_o, is defined by a, the coefficient of x^2 in the above equation, in the following manner:

$$R_o = 1/2|a| \qquad \text{Eqn. 1-3}$$

where: $|a|$ = the absolute value of a

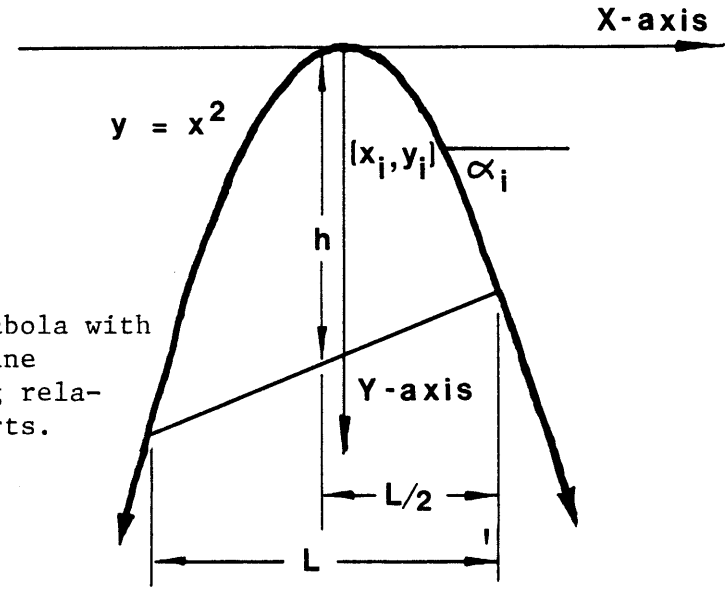

Fig. 1-5a Parabola with intersecting line segment showing relationship of parts.

$R_o = L^2/8h$ $\qquad$ $R_i = R_o/\cos^3\alpha_i = R_o(1 + 2y_i/R_o)$

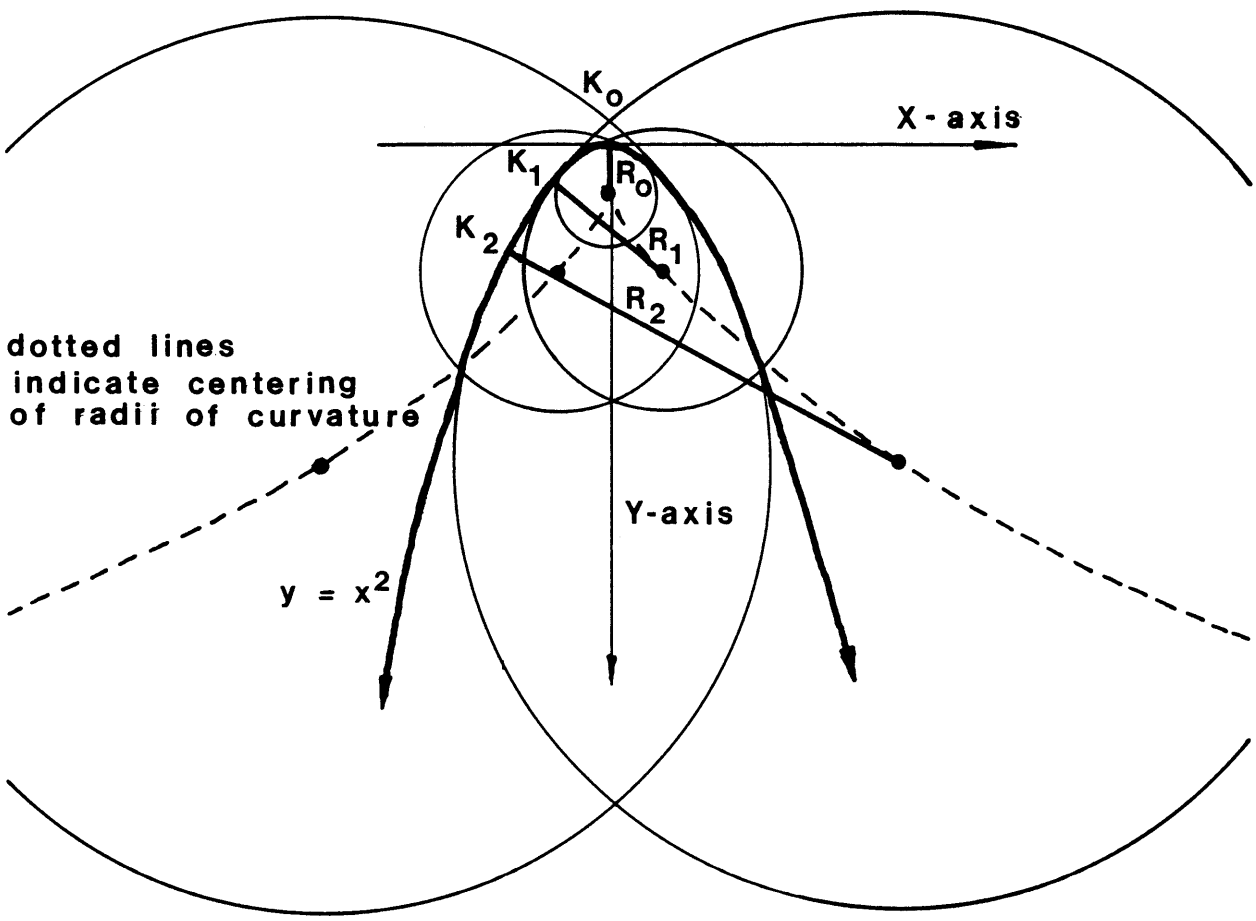

Fig. 1-5b Parabola showing changing curvature and radii of curvature.

Also, R_o has the following relationship to the horizontal span, L, of any section cut through the parabola, where h is the vertical height of the section at midspan (Fig. 1-5a):

$$R_o = L^2/8h \qquad \text{Eqn. 1-4}$$

R_i, the radius of curvature at any point, i, along the parabola, can be found once R_o and the angle, α, which the parabola makes with a horizontal line at i, are found:

$$R_i = R_o/\cos^3\alpha \qquad \text{Eqn. 1-5}$$

The equations, 1-3, 1-4, and 1-5, hold true for arches, cables, membranes, and shells with parabolic cross sections. The height, h, for an arch, merely becomes the sag, f, for a cable. The different methods for determining the radii of curvature at several points along the curve are important because they assist the designer in establishing the compression and tension forces in arches, hanging cables, and shell structures.

For an arch in compression or a cable in tension we can use R_i, to find the force, T_i, in the element, if we know the component of the load perpendicular to the surface, $p^{\perp}$:

$$T_i = p^{\perp} R_i \qquad \text{Eqn. 1-6}$$

Although, I show the circle in the example below (Fig. 1-6), the relationship holds for any curve.

From these examples it is apparent that a larger curvature, K_i, and a smaller radius of curvature, R_i, ($K_i = 1/R_i$), will yield a smaller force in the member or membrane for the same external force,

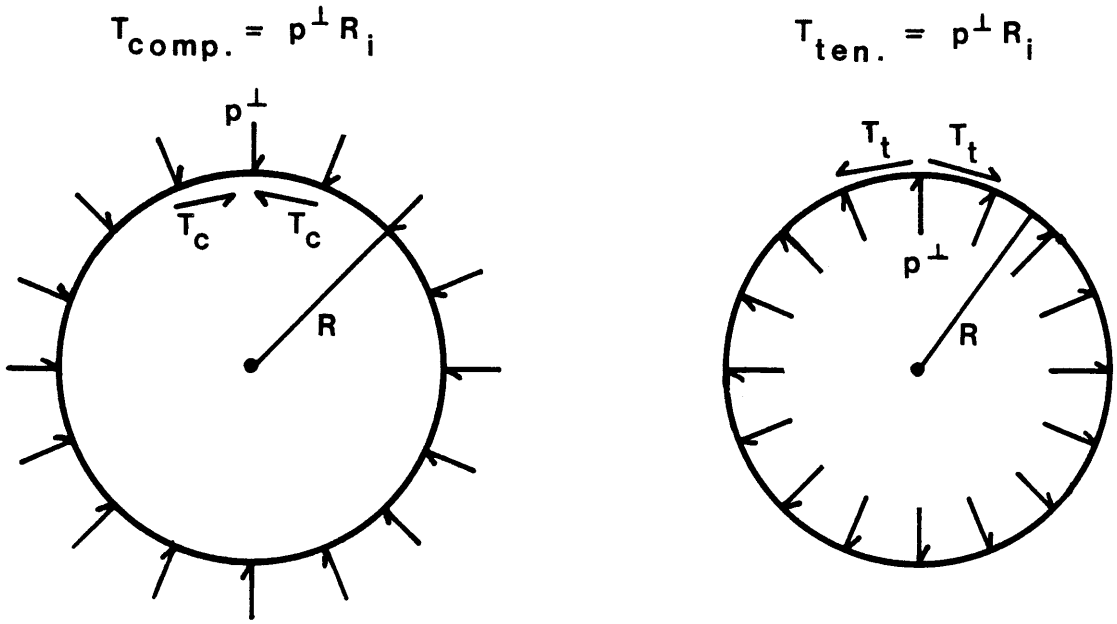

Fig. 1-6 Compression and tension forces in circular membranes.

$p^{\perp}$. Increasing the height/span ratio for an arch under a distributed load (Fig. 1-4) effectively increases the curvature. Consequently, the internal member forces are relatively diminished.

Nature uses curvature in a myriad of instances to protect its creatures against other forces of nature; such as weather and other creatures. Witness the giant sea clam, (Fig. 1-7), whose corrugated shell guards the inhabitant against the forces of sea water and predators. The greater curvature of a corrugated shell over the more simple convexly contoured shell, lessens the internal forces which arise in response to externally applied loads.

Fig. 1-7 Corrugated shell of the great sea clam.

Membranes are thin plates in three dimensions whose structural integrity is maintained primarily by tensile forces. Shells are thin plates whose equilibrium is maintained by an interplay of tensile and compressive forces. Determining the membrane forces in membranes and shells is a bit more involved than with the planar configurations

such as arches, cables, and rings. Professor Waclaw Zalewski comments in his notes on "Membranes and Shells," on the nature of forces in membranes, "In general two basic conditions determine the forces within a membrane: 1) curvature and 2) boundary conditions."[1] Let's inspect curvature in greater depth. The curvature of shells (note: from this point on I will use the term, "shells," to indicate both membranes and shells) is characterized as positive, negative, or zero. The intersection of the shell with two perpendicular planes oriented with respect to the principle axes of the shell, delineates two lines which lie in the surface of the shell. The two perpendicular planes are oriented properly if the lines delineated by the intersection with the shell have the greatest difference in curvature of all possible orientations. For every shell there is an orientation of the planes which will describe two lines whose curvatures determine a maximum and a minimum curvature for the shell. This is the proper position of the planes to ascertain the curvature of the shell.

If the curvatures of both lines is oriented in the same direction, then the curvature of the shell is considered positive. Domical shells have positive curvature. If the curvatures of the two lines are opposite in orientation, the curvature of the shell is negative. The surface of a riding saddle is exemplary of negative curvature. Zero curvature is produced by the product of a straight line, with zero

---

[1] Zalewski, W. P. "Membranes and Shells" p. 36

curvature, and a curved line. A cylinder has zero curvature. Let T_1 be the membrane force in one line and let T_2 be the force in the other line. The following formula relates the external force perpendicular to the surface, $p^{\perp}$, and the radii of curvature of the two lines, R_1 and R_2, to the membrane forces:

$$T_{1/R_1} + T_{2/R_2} = p^{\perp} \qquad \text{Eqn. 1-7}$$

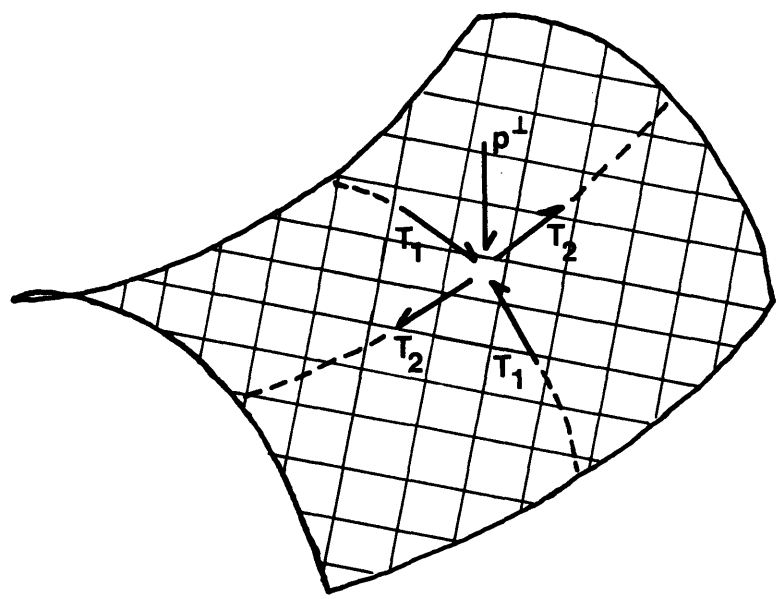

Fig. 1-8 Surface with negative saddle-like curvature, Eqn 1-7 applies to surfaces with positive curvature as well.

Because the forces at right angles to each other in the negatively curved surface are in compression and tension, they have opposite

signs. The opposite signature cancels out the effect of the opposite direction of the curvatures of the principle axes. Therefore the terms, T_{1/R_1} and T_{2/R_2}, are additive. For spherical shells, the radius $R = R_1 = R_2$. Eqn. 1-7 becomes simply: $T_{1/R} + T_{2/R} = p^{\perp}$. A difficulty with Eqn. 1-7 is the effort required to calculate the value of the force perpendicular to the surface, $p^{\perp}$. There are methods which can assist the calculations necessary to find the forces in each kind of shell. I will suggest a few which work for the hyperbolic paraboloid and various kinds of domes.

For a hyperbolic paraboloid ("hypar") situated under a load uniformly distributed along the horizontal, the following is true. Depending on the boundary conditions, the horizontal components, H_1 and H_2, of the membrane forces, T_1 and T_2, can be constant throughout. Imagine the two perpendicular lines in Fig. 1-8 to have a width equal to one unit of measure. Because they are situated in the center of the saddle, a full unit's worth of the distributed load will rest on these strips. If we consider parallel strips to either side of either center strip, their widths are determined by the vertical projection of a one unit strip of distributed load. In either direction, as the slope of the saddle gets steeper the actual strips will get wider to accept the same one unit strip of load from above. Since the load acts over some area, giving dimension to the lines along which the compressive and tensile forces act allows an actual quantity to be associated with the membrane forces, T_1 and T_2.

If the hypar consists of similar parabolas which generate the

curvatures in the two perpendicular directions, then $H_1 = H_2$. At the intersection of the apexes of the two parabolas, $H_1 = H_2 = T_1 = T_2$. The last statement is true because the shell is horizontal in both directions at this point. Since the nominal radius of curvature at the apex, R_o, is the radius of curvature for both parabolas at this point, we can substitute these values into Eqn. 1-7:

$$H/R_o + H/R_o = p^{\perp} \qquad \text{Eqn. 1-8}$$

$$2H = p^{\perp} R_o \qquad \text{Eqn. 1-9}$$

By definition the load, p, is perpendicular to the surface of the hypar at the intersection of the apexes. Eqn. 1-9 can be simplified to: $2H = pR_o$.

Since p is a given, by nature of the program and code specifications, if we know R_o we can find H. Eqn. 1-3 states: $R_o = 1/2|a|$, where a is the first coefficient of the standard form of the parabolic equation: $y = ax^2 + bx + c$. We need to know these coefficients to design the curvature of the hypar at the outset. Also, from Eqn. 1-4 we know: $R_o = L^2/8h$, where L is the horizontal span of any segment of the parabola we choose and h is the height or sag of the curve above or below the segment line taken at the midspan (Fig. 1-5a). Employing either of the above equations to fix R_o allows us to find H. With H computed, we can evaluate T_1 and T_2 at any point within the boundary or edge conditions. The edge conditions are too complex to generalize about.

The horizontal component of the membrane force, H, is constant

for the hypar under a uniform distributed load. At any point along the shell, the compression force, T_1, equals the horizontal component of the force, H, divided by the cosine of the angle which the shell at that point makes with the horizontal:

$$T_1 = H/\cos\alpha_1 \qquad \text{Eqn. 1-10}$$

$$T_{1max.} = H/\cos\alpha_{1max.} \qquad \text{Eqn. 1-11}$$

And for the tensile forces in the shell, the same is true:

$$T_2 = H/\cos\alpha_2 \qquad \text{Eqn. 1-12}$$

$$T_{2max.} = H/\cos\alpha_{2max.} \qquad \text{Eqn. 1-13}$$

Fig. 1-9 shows the intersection of a compression strip and a tension strip of a hypar meeting at some point other than the apex. The drawing simulates the elements of the above equations.

If R_1 and R_2 of Eqn. 1-7 are calculated using Eqn. 1-5 ($R_i = R_o/\cos^3\alpha$), then T_2 can be derived by another method once H and $p^{\perp}$ are established. Rewriting Eqn. 1-7 shows:

$$T_2 = (p^{\perp} - \frac{H/\cos\alpha}{R_1})R_2 \qquad \text{Eqn. 1-14}$$

The above methods of analysis also help to understand domical shells. The methods, although different in form and result, are useful if the notion of principle lines of force, indicated above, is evolved. For simple analysis of the hypar, one can imagine the lines to be parabolic strips, one unit measure or greater in width, whose axes lay parallel to one or the other of the principle axes of the shell. With the addition of dimension, the above formulas gain quantatative value. The area on which the load, p, rests can

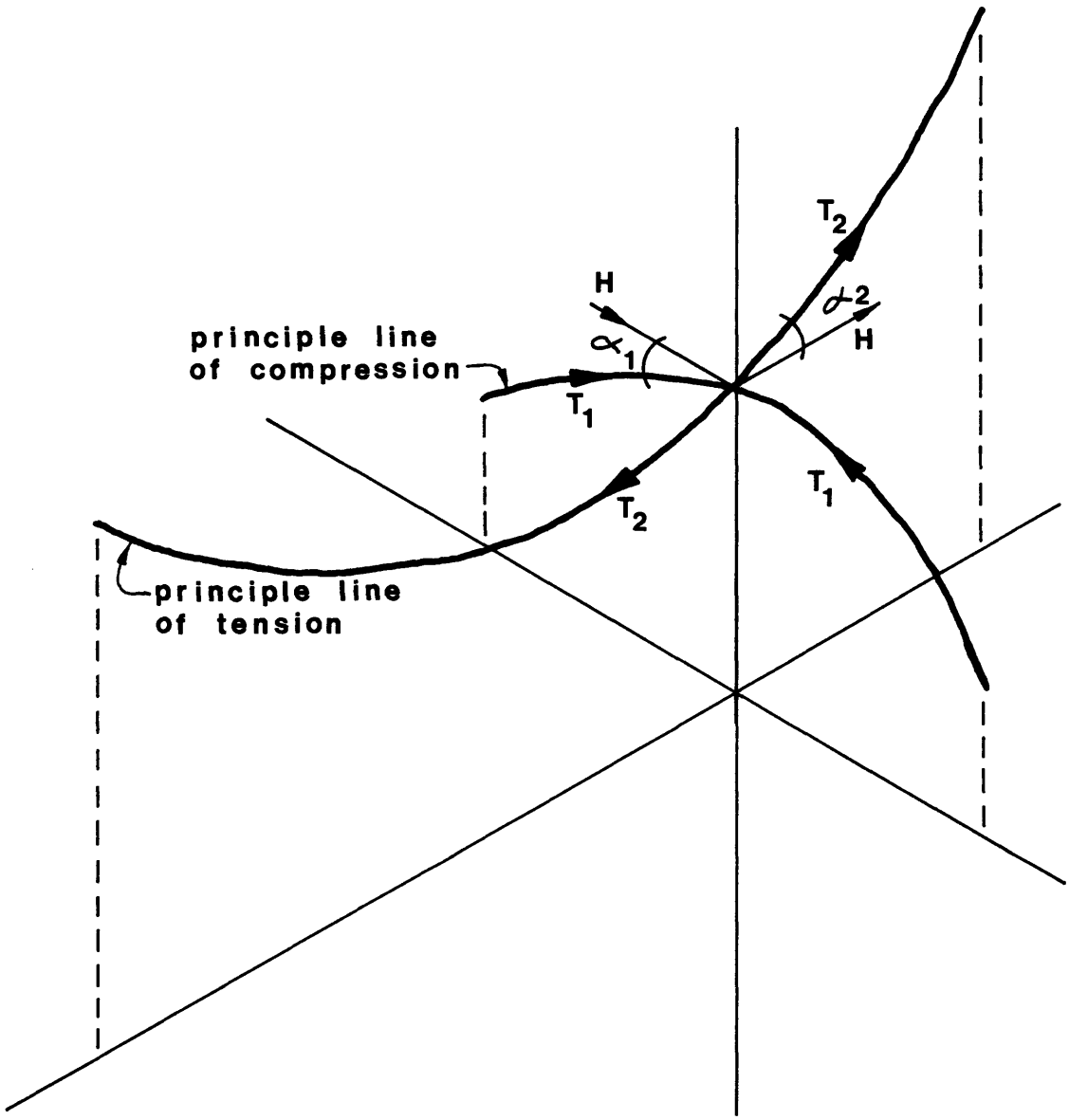

Fig. 1-9 Intersection of compression strip and tension strip in a hypar at point other than the apex. Imagine that the lines shown have dimension. Principle forces and horizontal components are depicted.

be specified to the width of the strip. Consequently, T_1 and T_2 can be derived as the compressive and tensile forces per width of strip. For stress, one would have to consider the thickness of the shell as well. For the dome, the strips are best taken in a manner whereby the strips radiate from the north pole or highest point. These strips are referred to as meridian strips. The forces which develop in-line with the strips are called the meridian forces. The membrane forces which evolve in the direction prependicular to the meridian forces are referred to as the ring forces. The meridian forces are generally compressive while the ring forces shift from compressive forces towards the top to tensile forces towards the bottom. Once the meridian forces, T_1, are found, the ring forces, T_2, can be figured with the form variation of Eqn. 1-7 written below:

$$T_2 = (p^{\perp} - T_{1/R_1})R_2 \qquad \text{Eqn. 1-15}$$

With this brief survey of shells and the workings of the internal forces under load, I will now return to investigate more thoroughly thinner slices of structure; the nearly two-dimensional arch.

What are the necessary conditions for an arch to be placed in compression and how does one define the limit at which bending forces begin to exist? If the force resulting from the addition of loads to the arch above the point of analysis is located within the inner 1/3rd of the arch's depth and within the inner 1/3rd of the arch's width and oriented such that it is parallel to the central axis of the arch, then the entire cross section of the arch will be in

compression (Fig. 1-10).

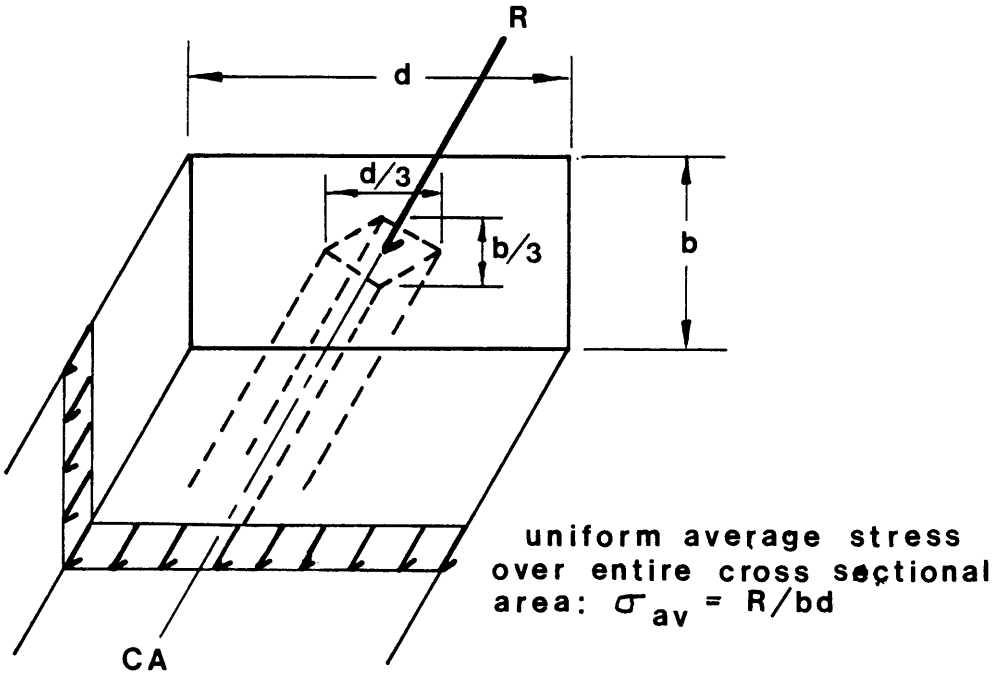

Fig. 1-10 Cross section of arch member showing inner core within which the force resultant can place the arch in compression. Where:

R = force resultant

d = depth of the arch member

b = width of the arch member

CA = central axis

If the resultant of the load forces, R, is directly in-line with the central axis (as drawn above) then the average stress experienced by the arch is uniform across the cross section and is

equal to the force resultant divided by the cross sectional area, $\sigma_{av} = R/bd$. Any eccentricity, e, created by the load resultant's position occurring at some distance away from the central axis, produces a moment stress. The maximum stress due to bending, $\sigma_{max.} = M/S$, is therefore defined by the moment, $M = Re$, and the section modulus, $S = bd^2/6$:

$$\sigma_{max.} = \frac{Re}{bd^2/6} \qquad \text{Eqn. 1-16}$$

A linear elastic material is a material which when loaded experiences stress (σ) values in direct proportion to strain (ϵ) values over a certain range (i.e. where: $E = \sigma/\epsilon$). Moment invites the following stress distribution in a member with linear elastic properties (Fig. 1-11).

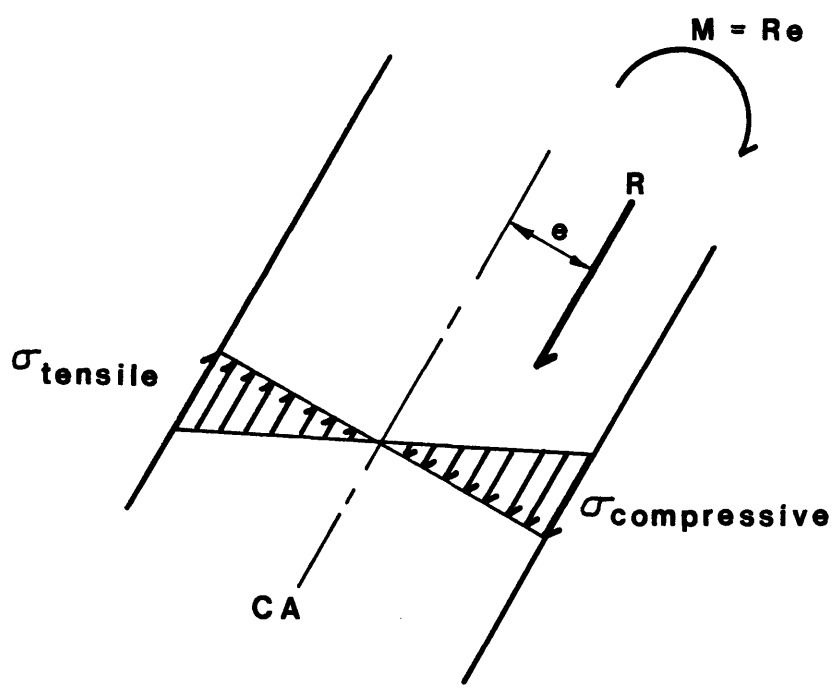

Fig. 1-11 Stress distribution due to moment, $M = Re$, in a linear elastic material.

Once the magnitude of the maximum tensile stress due to bending equals the compressive stress due to the force acting in-line with the longitudinal axis, then the limit of zero stress has been reached in the extreme fiber on the tension side of the member. The stress is zero at this point because the tensile action cancels the compressive action.

$$\sigma_{\text{compressive axial}} = \sigma_{\text{tensile bending}} \qquad \text{Eqn. 1-17}$$

$$R/bd = \frac{Re}{bd^2/6} \qquad \text{Eqn. 1-18}$$

$$e = d/6 \qquad \text{Eqn. 1-19}$$

As depicted graphically in Fig. 1-10, this limit occurs at a distance of d/6 to either side of the central axis. If R is located within the inner 1/3rd of the arch's depth and within the inner 1/3rd of the arch's width, the entire cross section will be under compressive stress. Once the limit is surpassed, the extreme fibers of the edge, farthest away from the force resultant, are placed in tension (Fig. 1-12).

In Fig. 1-12b, with e = d/2, the inner edge has reached four times the average compressive stress, σ_{av}, that would arise if R were located directly above the central axis. The outer edge is in tension, a force not all arches are able to resist. If the eccentricity is greater, the resulting moment and bending stress will grow accordingly. If we can trace the trajectory of the force resultant and its relative position to the arch we can determine the overall moment stress distribution.

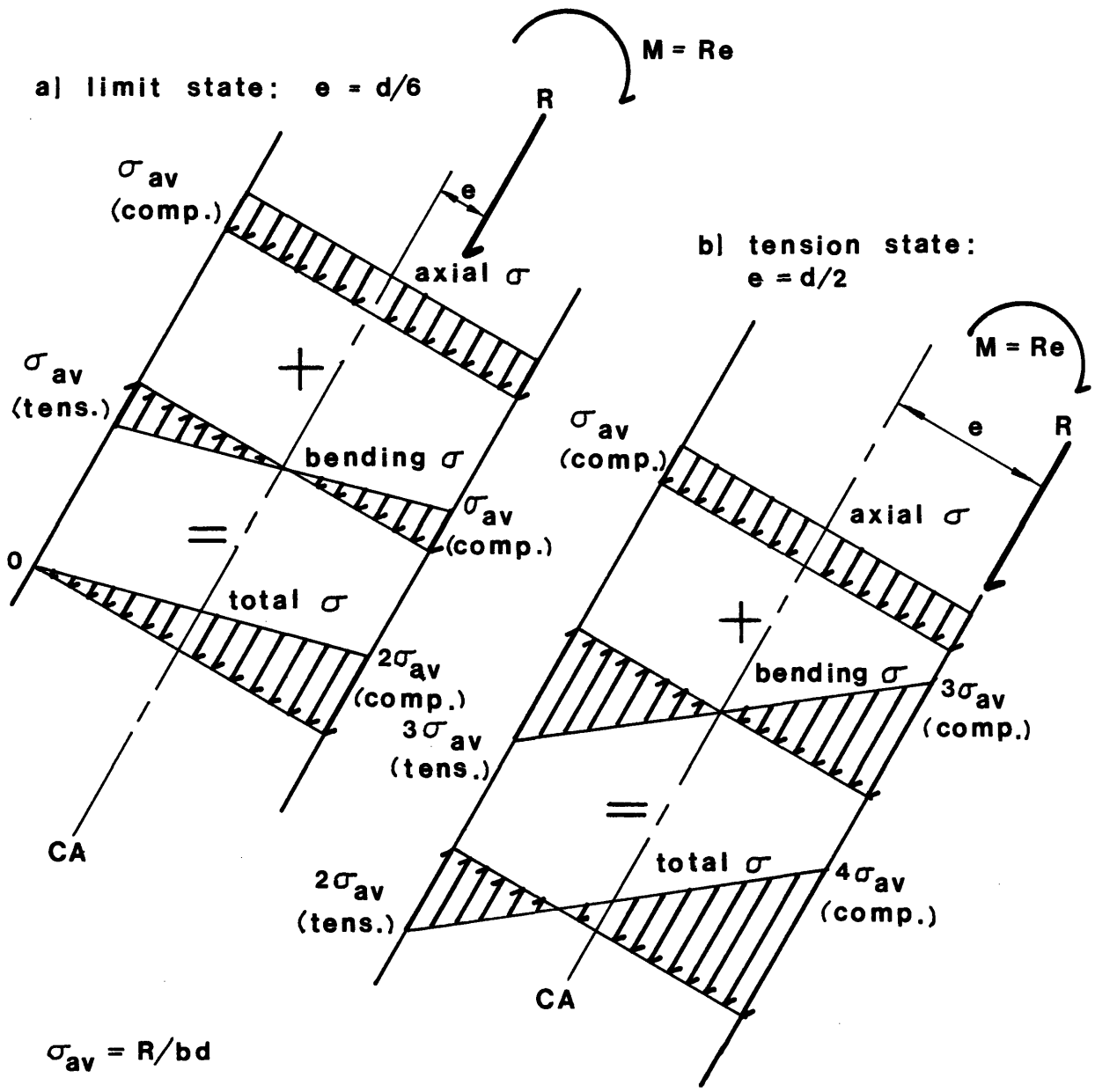

Fig. 1-12

a)	Limit state:	Where the total stress in the arch develops from the force resultant, R, acting at an eccentricity, e = d/6.
b)	Arch in tension:	Total stress shown in arch where the stress arises from the force resultant, R, acting at an eccentricity, e = d/2.

For arches with prismatic cross sections whose material behaves in a linear elastic fashion (e.g. steel), within the linear range the moment stress will manifest itself in a linear distribution from maximum compression on the side of the arch toward the eccentric loading to a minimum compressive or maximum tensile stress on the opposite side. Take for example the loading of the arch in Fig. 1-3: a point load, P, at center span, over a curved arch. For the purposes of this example imagine the arch to be a semicircle. The pressure line, indicates the optimum path that the load could take to the supports. For any arch the pressure line is the funicular shape under a similar load, flipped upside down. The pressure line for a point load is made up of two straight lines which connect the load and the supports (Fig. 1-13). The area enclosed by the pressure line and the ground plane is approximately equal to the area enclosed by the arch and the ground plane. To find the height of the triangular shaped pressure line, the area of the triangle is equated to the area of the semicircle:

$$hL/2 = \frac{\pi (L/2)^2}{2} \qquad \text{Eqn. 1-20}$$

where: $L/2 = R =$ radius of the circle

$$h = .785L \qquad \text{Eqnl 1-21}$$

The moment, at any point on the arch, caused by the effect of the out-of-line pressure line is equal to the horizontal component A_H or B_H, times the vertical eccentricity, e_v, at that point. The vertical component of the pressure line force, A_V or B_V, passes through the point at which the moment is taken. It therefore has

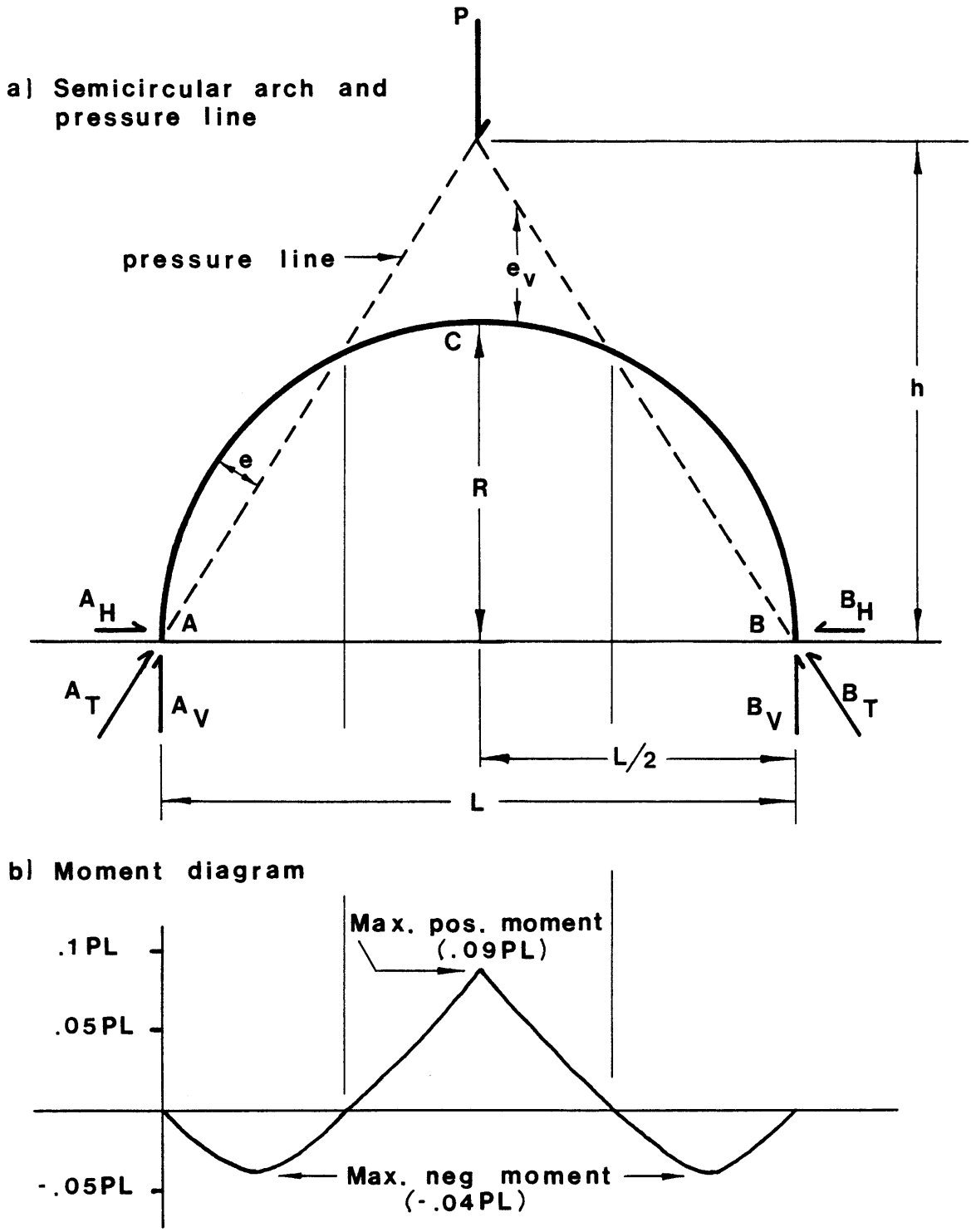

Fig. 1-13 a) Development of the pressure line for a point load placed at midspan over a semicircular arch.
b) The resulting moment diagram.

zero moment arm and zero moment. In this case the slope of the pressure line is constant as is the force throughout each leg, A_T and B_T. Consequently, A_H and B_H are constant as well: $A_H = B_H = .32P$. At the apex of the arch, the maximum positive moment is found with a vertical eccentricity equal to .285L:

$$M_C = .32P(.285L) = .09PL \qquad \text{Eqn. 1-22}$$

The moment goes to zero as e_v goes to zero at the approximate points, L/4 and 3L/4 (Fig. 1-13b). The maximum negative moments occur at the approximate points, L/8 and 7L/8, where:

$$M = .32P(-.125L) = -.04PL \qquad \text{Eqn. 1-23}$$

To counteract the increases in the magnitude of the moment, the cross section can be thickened, more reinforcing bar can be added, or both. These changes would resist the tendency of the load to fold the arch inwards under positive moment, or outwards under negative moment. Every arch has a geometry and every corresponding load has a trajectory which describes the pressure line relative to the arch. The graphic simulation of the interplay of load forces and arch geometries affords a means for quickly estimating the necessary reinforcing and cross sectional area throughout the length of an arch. Obviously, if the geometry of the pressure line and the arch coincide, we have a more efficient system.

The beam, like the arch, is a mechanism for transferring load. And, like the arch, the beam sustains the weight of a load by developing resistance to compressive and tensile stresses. For any load, both the arch and the beam will transfer the load forces through

the material of the member to the supports along lines which are called trajectories of principle stress. The principle stress lines for tensile stress lie perpendicular to the principle stress lines for compressive stress. For a uniformly distributed horizontal load, the principle lines of stress for a rectilinear beam and an arch of uniform cross section are shown below (Fig. 1-14). Assume the arch is the inversion of the funicular shape for this load.

The principle lines of stress in the beam occur in a concentric arch-like and cable-like configuration. These curved lines have a shape somewhat similar to the pressure line for the load. Although the stress patterns which are present in the arch and beam manifest themselves in similar ways, the differences between the two are significant.

The arch develops compressive stress along the longitudinal axis. The average compressive stress is uniform throughout the cross section because in this case the pressure line coincides with the geometry of the arch (both are parabolic). The dotted lines indicate the lines along which principle tensile stress would arise if it existed. But, since there is no force present to generate tension, these lines merely represent the axes of zero compression.

In the beam maximum compressive stress takes place at the top center while the maximum tensile stress lies at the bottom center (Fig. 1-14). Elsewhere, these stresses diminish in intensity. Because the beam will attain full stress capacity in only a few spots, there is a less than efficient use of the material. As a result, the

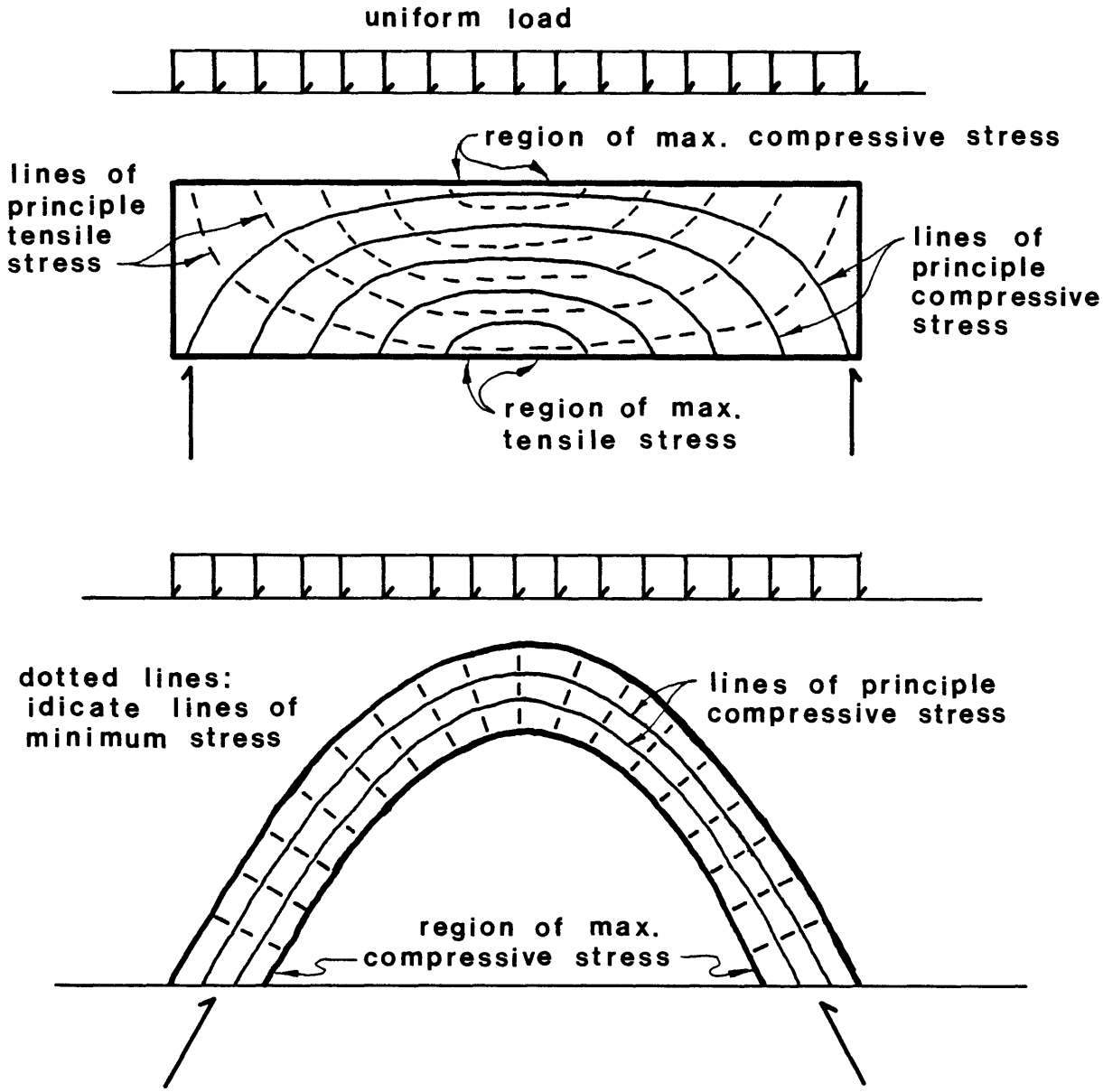

Fig. 1-14 Beam and arch under uniform load showing principle lines of compressive and tensile stress.

beam will require considerably more volume of material to do the

same job. A drawback with the arch is that it requires a tie member or a buttress to resist the horizontal thrust. Its height at the center span may very well exceed the depth of the beam to advantage or disadvantage. If the height of the arch were equal to the depth of the beam the thrust forces would be large indeed.

A concept emerges from the above discussion that is significant enough to reiterate here. When analyzing the load bearing capability of structural members,the appropriateness of the geometry of the section for the given loading is the most critical factor in assessing its structural efficiency. Again, structural efficiency suggests the potential of the form to develop the full strength of the material. If one cuts a section through both the arch and the beam of Fig. 1-14, the point is graphically demonstrated (Fig. 1-15).

The external forces of the load, P, and the vertical support reaction, A_V, will try to rotate the member and turn it over. The beam has an internal moment arm within its section equal to approximately 2d/3 to resist the overturning. The internal couple of forces need to be quite large in comparison to the external couple of forces, whose moment arm is much greater. The arch, however, resists the overturning with the help of the horizontal thrust, A_H and the other half of the arch. The moment arm of these resisting couple of horizontal forces is generally of a magnitude similar to the moment arm of the vertical couple of forces. Therefore the internal forces which arise to counteract the load on the arch are relatively small. In addition the moment due to vertical forces is absorbed primarily

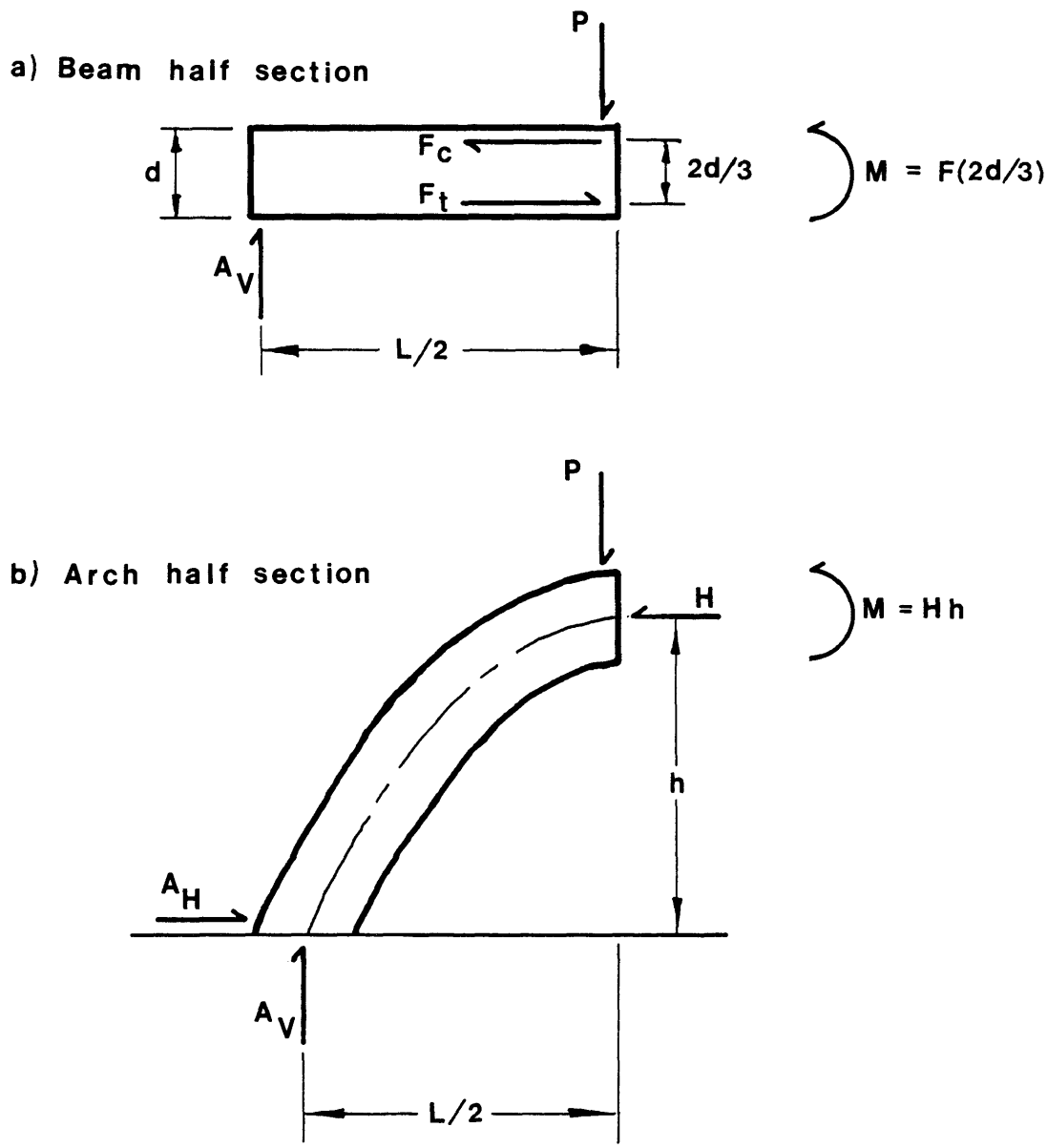

Fig. 1-15 a) Section of a beam showing the internal couple of horizontal forces which resist overturning.
b) Section of an arch showing the couple of horizontal forces which resist overturning.

by the resisting moment due to the arch's geometry and not that which arises from the depth of the arch. Again, if the arch's geometry is such that the load forces can be transferred without the added burden of a bending stress, we are a step ahead. The arch can be thinner and lighter. With these insights in mind, I will sketch in the characteristics of the semicircle and the semiellipse and their orientation to load in the following section, Chapter II.

II. Circle and Ellipse

The condition of no bending in an arch is not always possible with the erratic and unpredictable nature of live loads. Consequently, structures have to be designed to resist the eccentric loadings and resulting bending stresses caused by inhabitants, wind, snow, etc.. However, structures can be designed so that the dead load is supported with virtually no bending stress. The latter condition is that which I would like to derive for the several curves previously discussed: the best distribution of the theoretical dead loads for a given arch shape. Although we will be working in two dimensions, the results are similar in three dimensions. Simply imagine each arch and its distributed load rotated about the axis of symmetry to supply the information pertinent to the related domical shape. Let us begin with the circle (Fig. 2-1).

The circle, with radius R, is centered about the X-axis and the Y-axis, both measured from the origin, (0, 0). From the Pythagorean Theorem we know the following:

$$x^2 + y^2 = R^2 \qquad \text{Eqn. 2-1}$$

$$y = (R^2 - x^2)^{\frac{1}{2}} \qquad \text{Eqn. 2-2}$$

The latter equation is a description of the circle in terms of y. Given that R is a constant, equal to any value of our choosing, we

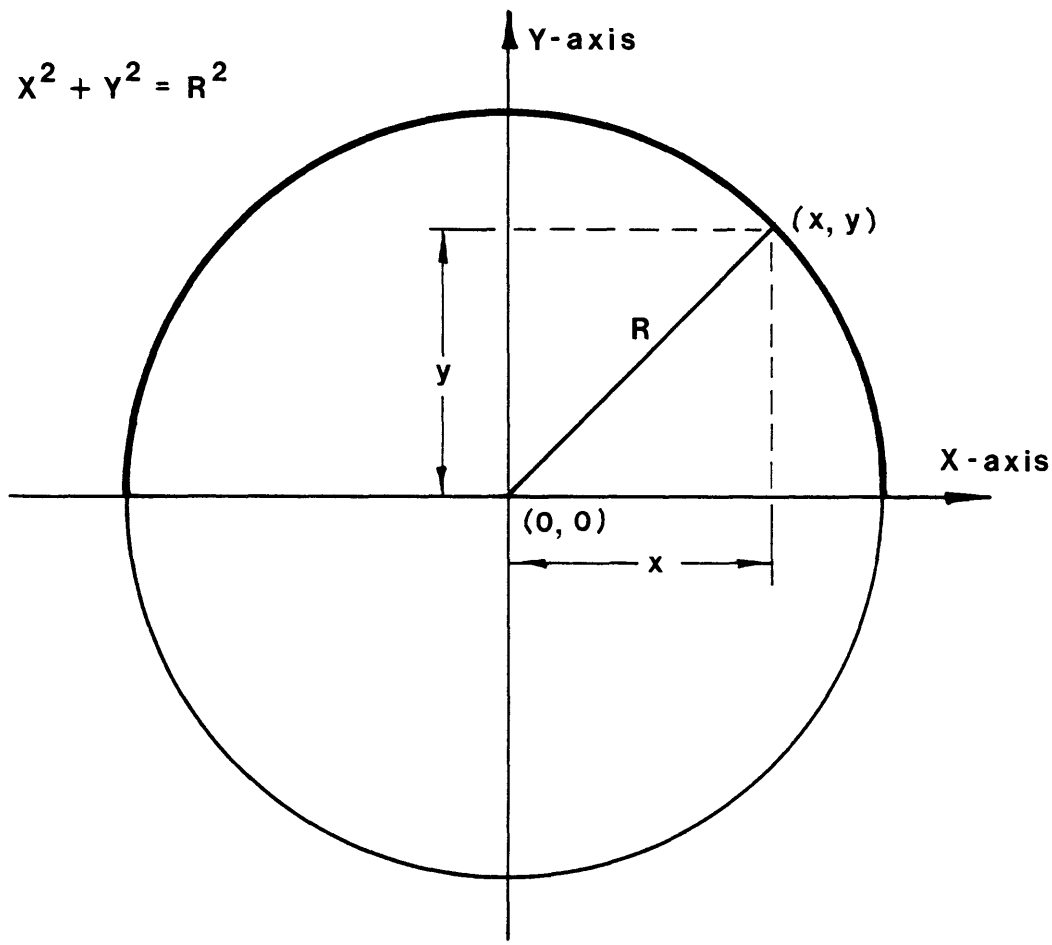

Fig. 2-1 Circle with radius, R.

can plug in values of x and obtain the corresponding y values. The abscissa, x, can be positive or negative. For the purposes of depicting a semicircular arch, positive values of the ordinate, y, will be used.

For all statically designed structures, the following three conditions of equilibrium hold:

$$a)\ \Sigma F_H = 0 \quad b)\ \Sigma F_V = 0 \quad c)\ \Sigma M = 0 \qquad \text{Eqn. 2-3}$$

Translated these read: a) Summation of forces horizontal equals zero, b) Summation of forces vertical equals zero, and c) Summation of moments equals zero. The forces indicated by these notations include all forces, both external and internal. The relationships are true for any point on the structure, any free body section, and for the structure as a whole. To understand how these conditions of equilibrium work, an explanation will be made with the semicircle as the example. Imagine a cable loaded such that the funicular shape that it adjusts to under the loading is that of a semicircle (Fig. 2-2).

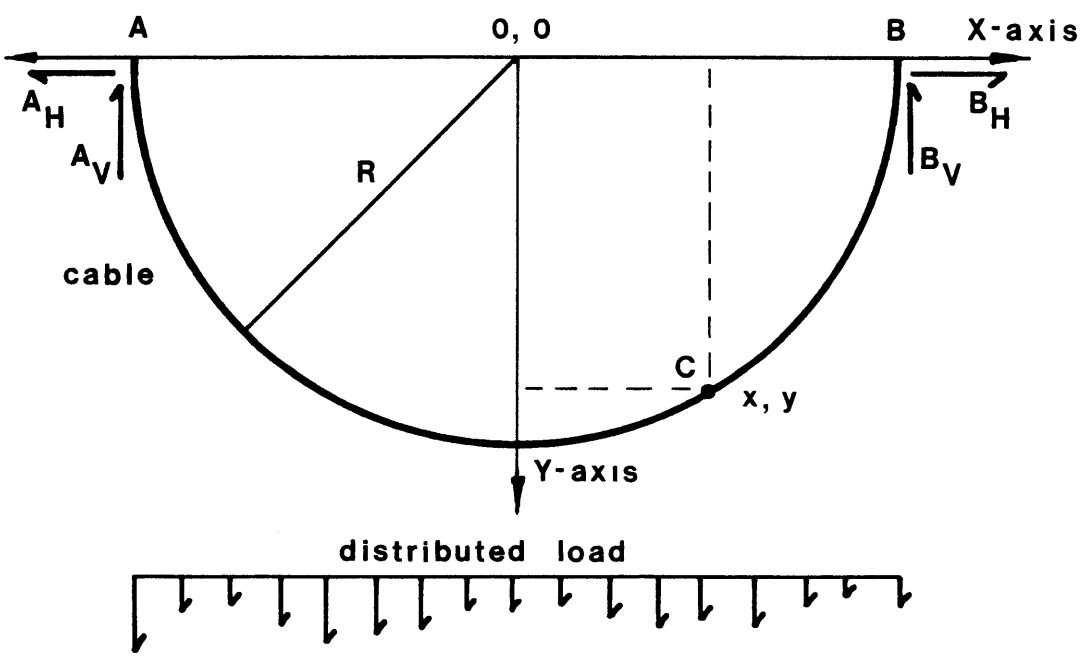

Fig. 2-2 Semicircular cable under unknown distributed load.

In Fig. 2-2 I have drawn the distributed load in a random fashion because I'm assuming we still do not know the correct one. A_V and B_V are vertical reactions at the supports, while A_H and B_H are the horizontal reactions at the supports. C is any point on the cable with the corresponding coordinates, (x, y). At point C, we have the interaction diagramed below in Fig. 2-3a.

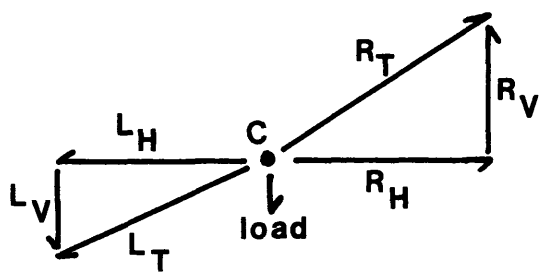

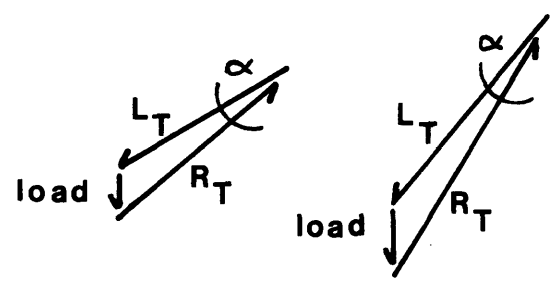

Fig. 2-3a Vector analysis of point C on cable.

Fig. 2-3b Vector analysis of two different points. Right drawing indicates point closer to support point B.

where: L_T = total tension left R_T = total tension right

L_V = left vertical component R_V = right vertical component

L_H = left horizontal component R_H = right horizontal component

For point C to be in equilibrium, the first two conditions show

that the following relationships must hold:

$$\Sigma F_H = 0: \quad L_H + R_H = 0 \qquad \text{Eqn. 2-4}$$

$$\Sigma F_V = 0: \quad L_V + R_V + \text{load} = 0 \qquad \text{Eqn. 2-5}$$

The horizontal forces, L_H and R_H, must be equal and opposite. This is true for any point along the cable if the load is vertical. Eqn. 2-5 states that together, L_V and the load, must be equilibrated by R_V, as shown in Fig. 5a. Another way to understand this relationship is to examine the interaction between L_T and R_T as we ascend the cable toward the right support.

The resultant of the loads applied to the left of C is the force L_T. The combination of L_T and the additional load applied at point C must be equilibrated by R_T. As we approach the support point B, L_T increases in magnitude as more load is taken on. Since the curvature of the circle is constant, as the resultant force grows, a greater and greater load will be required to rotate its inclination the same number of degrees, α. This phenomenon is diagramed in Fig. 2-3b. Keep in mind that each vector represents position, magnitude, and direction.

A more difficult interaction to comprehend is the equilibrium of moments. Taking moments about C to calculate the resultant moment acting at C, we can isolate the section to the right of C with a free body diagram (Fig. 2-4). To take the moments about C we must satisfy the third condition of equilibrium: $\Sigma M_C = 0$. Throughout this paper I will consistently use a sign convention whereby counterclockwise rotations are considered positive, and

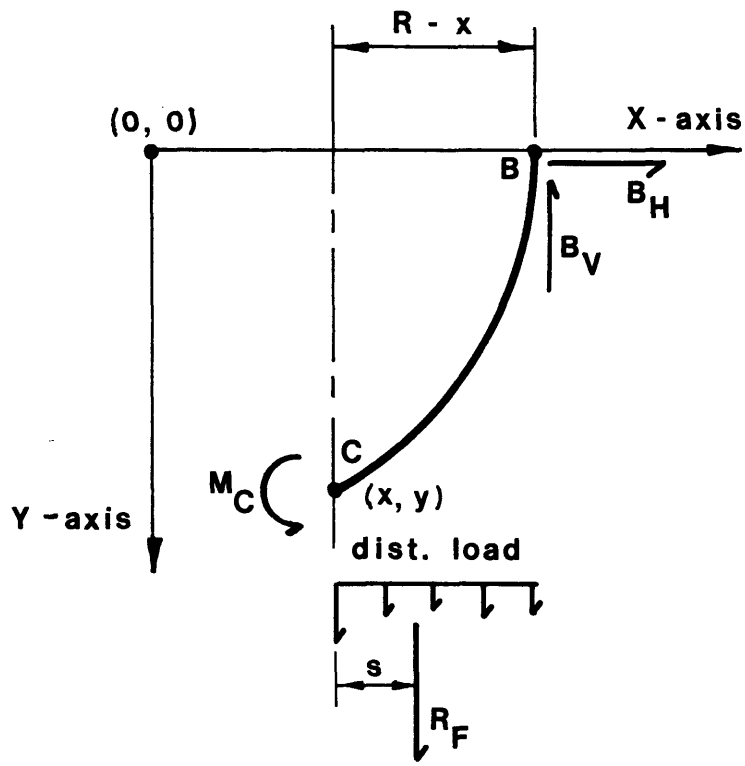

Fig. 2-4 Free body diagram of the section of cable to the right of point C.

where: R_F = resultant force of the distributed load

M_C = internal moment at C

s = horizontal distance from point C to force R_F.

clockwise rotations are negative. Therefore:

$$\circlearrowleft + \Sigma M_C = -R_F s + B_V(R - x) - B_H y + M_C = 0 \qquad \text{Eqn. 2-6}$$

Since the flexible cable, unlike your friend's shoulder, is incapable of developing an internal resisting moment, M_C in Eqn. 2-6 is zero. This leaves:

$$\Sigma M_C = -R_F s + B_V(R - x) - B_H y = 0 \qquad \text{Eqn. 2-7}$$

$$-R_F s + B_V(R - x) = B_H y \qquad \text{Eqn. 2-8}$$

Both R_F and B_V act in the vertical direction. Only B_H acts horizontally. Thus:

$$\Sigma \text{ Moments due to vertical forces} = -\Sigma \text{ Moments due to horizontal forces} \qquad \text{Eqn. 2-9}$$

This condition is always true for the hanging cable because of its inability to sustain internal moment. With a change of load, the cable adjusts its shape so that the condition still remains true. However, this interrelation is not always true for the arch. Arches have the capability to develop some internal resistance to bending. They remain standing because of this ability. But, if an arch has the inverted shape of a cable under the same load, it will have no need to develop bending resistance.

A simply supported beam does not require a horizontal force to maintain its equilibrium. The moment, M_x, taken at any point x, suffered under loading is equal to a summation of moments due to vertical forces only. For an identical vertically distributed load, the beam is a cousin of the cable, for the moments due to vertical forces are the same for both. Consequently, the moment for the beam, M_x, is also equal to the summation of moments due to horizontal forces for the cable system:

$$M_x \text{ (beam)} = \Sigma \text{ Moments due to vertical forces (both systems)} = -\Sigma \text{ Moments due to horizontal forces (cable system)} \qquad \text{Eqn. 2-10}$$

$$M_x = Hy \qquad \text{Eqn. 2-11}$$

$$M_{x/H} = y \qquad \text{Eqn. 2-12}$$

where: H = horizontal thrust

y = vertical displacement of cable

For a given vertical loading, H is constant at every point along the cable. As a result, M_x is directly proportional to y. The moment diagram of a simply supported beam has the same shape as the funicular curve, when both are loaded similarly. Remember, M_x describes both the summation of moments for any point on a beam and the summation of moments due to vertical forces for any point along the cable. Now let's return to the semicircular arch.

There are two equations which help us to define the arch:

$$y = (R^2 - x^2)^{\frac{1}{2}} \qquad \text{Eqn. 2-2}$$

$$y = M_{x/H} \qquad \text{Eqn. 2-12}$$

The first describes the semicircle analytically. The latter equation is applicable to any hanging cable and to those standing arches where there exists no internal moment. If there existed an internal moment, the moments due to vertical forces would not cancel the moments due to horizontal forces, and Eqn. 2-12 would not hold true. The y value in this equation refers to the vertical distance from the horizontal plane containing the supports (X-axis) to the cable or arch.

Imagine the vertically distributed load of the arch as first passing through a horizontal plane superimposed above the arch, before actually reaching the arch. In this light the load appears positioned similar to an identical load applied to a simply supported beam. At

present, we are only interested in the dead loads, basically, the weight of the structure itself. If the above two equations are combined we find:

$$M_{x/H} = y = (R^2 - x^2)^{\frac{1}{2}} \qquad \text{Eqn. 2-13}$$

$$M_x = Hy = H(R^2 - x^2)^{\frac{1}{2}} \qquad \text{Eqn. 2-14}$$

$$M_x = H(R^2 - x^2)^{\frac{1}{2}} \qquad \text{Eqn. 2-15}$$

The last of these equations states that the vertical ordinate, y, of a semicircular arch, at any point x, when multiplied by the horizontal thrust gives the value of the moment due to vertical forces, M_x. To obtain the loading distribution for the semicircular arch the second derivative of the moment due to vertical forces, M_x, needs to be found:

$$M_x'' = -p_x \qquad \text{Eqn. 2-16}$$

where: '' indicates the second derivative

p_x = load per linear unit of distance

The value of p_x is negative because the load acts downward in the negative direction. The first derivative of M_x will yield the value of shear, V_x, which is equivalent to the slope of the moment diagram of a similarly loaded beam:

$$M_x' = V_x \qquad \text{Eqn. 2-17}$$

where: ' indicates the first derivative

V_x = value of the shear force at any point x

Shear is the transverse tearing force experienced by a structural member due to the opposition of the upward reaction forces and the

downward load forces. Find the equation for the shear force:

$$M_x = H(R^2 - x^2)^{\frac{1}{2}} \qquad \text{Eqn. 2-15}$$

$$M_x' = V_x = H(\tfrac{1}{2}(R^2 - x^2)^{-\frac{1}{2}}(-2x)) \qquad \text{Eqn. 2-18}$$

The derivation gives the value of shear at any point x distance from the origin. H is constant and does not change throughout both derivations. Finding the slope of the shear diagram yields the load p at any point x:

$$V_x'' = p_x = H(-\tfrac{1}{4}(R^2 - x^2)^{-\frac{3}{2}}(-2x)(-2x) - (R^2 - x^2)^{-\frac{1}{2}}) \qquad \text{Eqn. 2-19}$$

$$p_x = H(-x^2(R^2 - x^2)^{-\frac{3}{2}} - (R^2 - x^2)^{-\frac{1}{2}}) \qquad \text{Eqn. 2-20}$$

$$p_x = -H(\frac{x^2}{(R^2 - x^2)^{\frac{3}{2}}} + \frac{1}{(R^2 - x^2)^{\frac{1}{2}}}) \qquad \text{Eqn. 2-21}$$

$$p_x = -H(\frac{x^2}{y^3} + \frac{1}{y}) \qquad \text{Eqn. 2-22}$$

$$p_x = -H(\frac{x^2 + y^2}{y^3}) \qquad \text{Eqn. 2-23}$$

$$p_x = -H(\frac{R^2}{y^3}) \qquad \text{Eqn. 2-24}$$

Since the load acts downward, p_x, the load per unit length, accepts a negative sign:

$$-p_x = -H(\frac{R^2}{y^3}) \qquad \text{Eqn. 2-25}$$

$$p_x = H(\frac{R^2}{y^3}) \qquad \text{Eqn. 2-26}$$

Eqn. 2-26 informs us that p varies inversely as the cube of y, the vertical distance between the ground plane and the arch. At the central axis where y = R, p is relatively small:

$$p_o = H/R \qquad \text{Eqn. 2-27}$$

Substituting p_o for H/R into Eqn. 2-26, we find:

$$p_x = p_o(R/y)^3 \qquad \text{Eqn. 2-28}$$

As y approaches 0, at either abutment, p goes to infinity. The theoretical dead load distribution for a semicircular arch, radius R, with axial compressive stress and no bending stress is shown below.

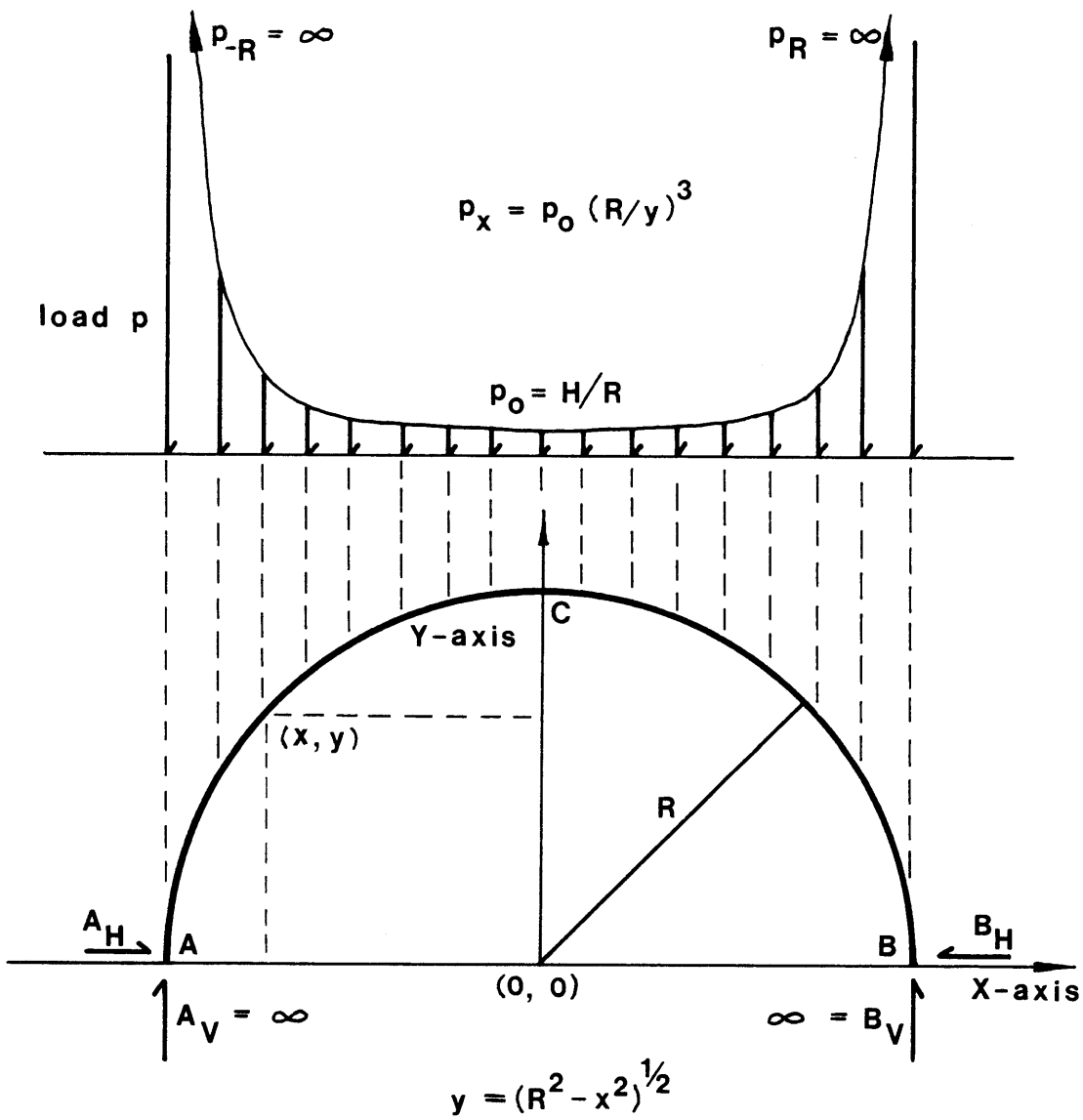

Fig. 2-5 Semicircular arch with the theoretical dead load distribution for axial compressive stress and no bending stress.

An infinite load at the abutments and infinite vertical support reactions to counterbalance are hardly realistic possibilities. Nonetheless, the diagram offers a general indication of the load distribution. The above loading diagram presents a semicircular arch loaded in a manner somewhat similar to the way the Roman aqueducts were loaded. The Roman loading would have been even more appropriate if they had filled the hollows behind the spandrels with rubble.

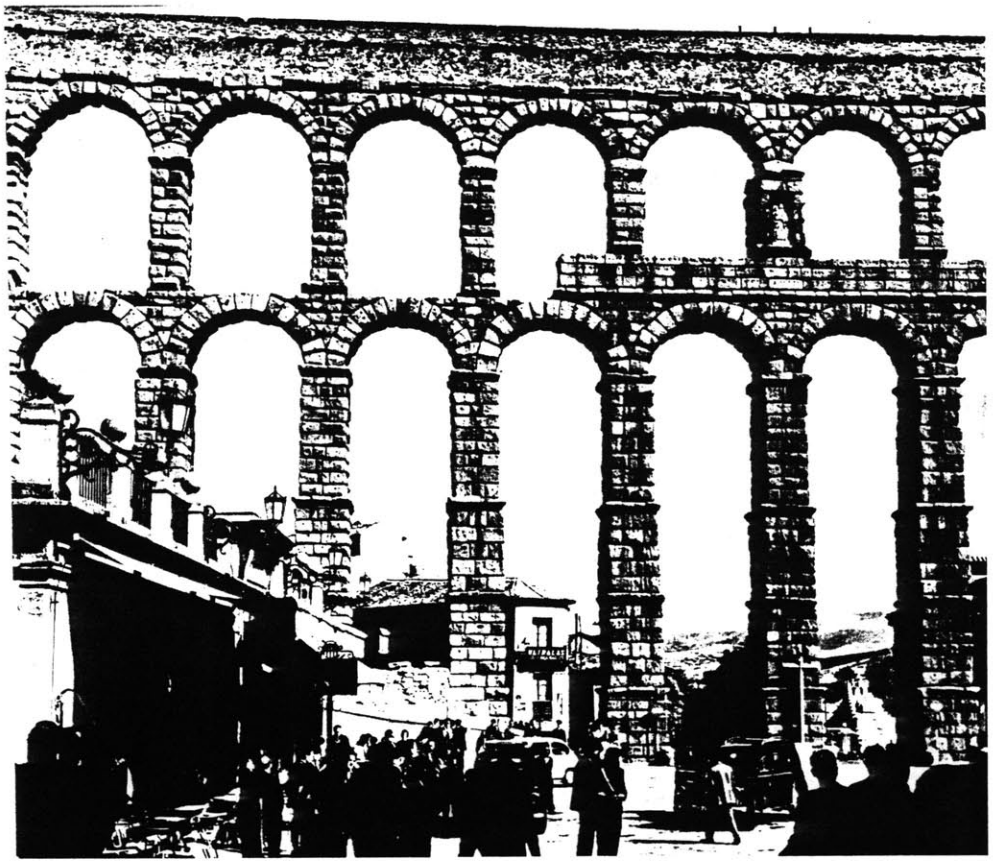

Fig. 2-6 Roman acqueduct in Segovia, Spain.

In his book, Cable Structures, Max Irvine comments that the Romans did just that, "The Roman arch almost invariably consisted of a semicircular ring of voussoirs backfilled to provide a level upper surface."[2]

The semicircular arch might have generated considerable respect from the Romans because of how well it behaved in this application. Not totally understanding the efficacy of alternative loadings, the Romans used the semicircle in other situations such as the dome, where it failed to perform as well. The mason's work in constructing the Roman arch was simplified by the fact that each voussoir was cut to an identical taper. This time saving reality was reason enough to build with that form. In addition the Romans may have felt an intellectual and spiritual link with the perfect unity expressed by the circle. Both in plan and in section the semicircle suggests the whole figure, the circle; whose closed form signifies continuity, and whose curvature represents constancy.

The form of the aqueduct is often found in nature. A March snow storm in Boston left the snow seen in the photo below on a fire escape bridge in Somerville (Fig. 2-7). The ensuing warmer weather melted away the snow. Warm air passing up through the cracks between the planks of the bridge precipitated the melting from underneath. As the snow melted from above, the water runoff helped to consolidate the snow below. The snow that became most compacted

---

[2] Irvine Max Cable Structures (Cambridge, 1981) M.I.T. Press, p. 11

Fig 2-7 Snow bridge on fire escape in Somerville.

was that which lay in line with the maximum compressive pressure lines created by the over layer of snow. Because of the air's ability to penetrate, the remaining less compacted snow under the arches melted away. The use of pressure lines in arch design will be demonstrated in Chapter III.

With the example of the circle in mind, we will now look at a very similar kind of curve, the ellipse. The curve which defines its form falls between two circles of different radii, a large circle with a radius a, and a small circle with a radius b. In the following

example the ellipse intersects the large circle at the X-axis and intersects the small circle at the Y-axis (Fig. 2-8).

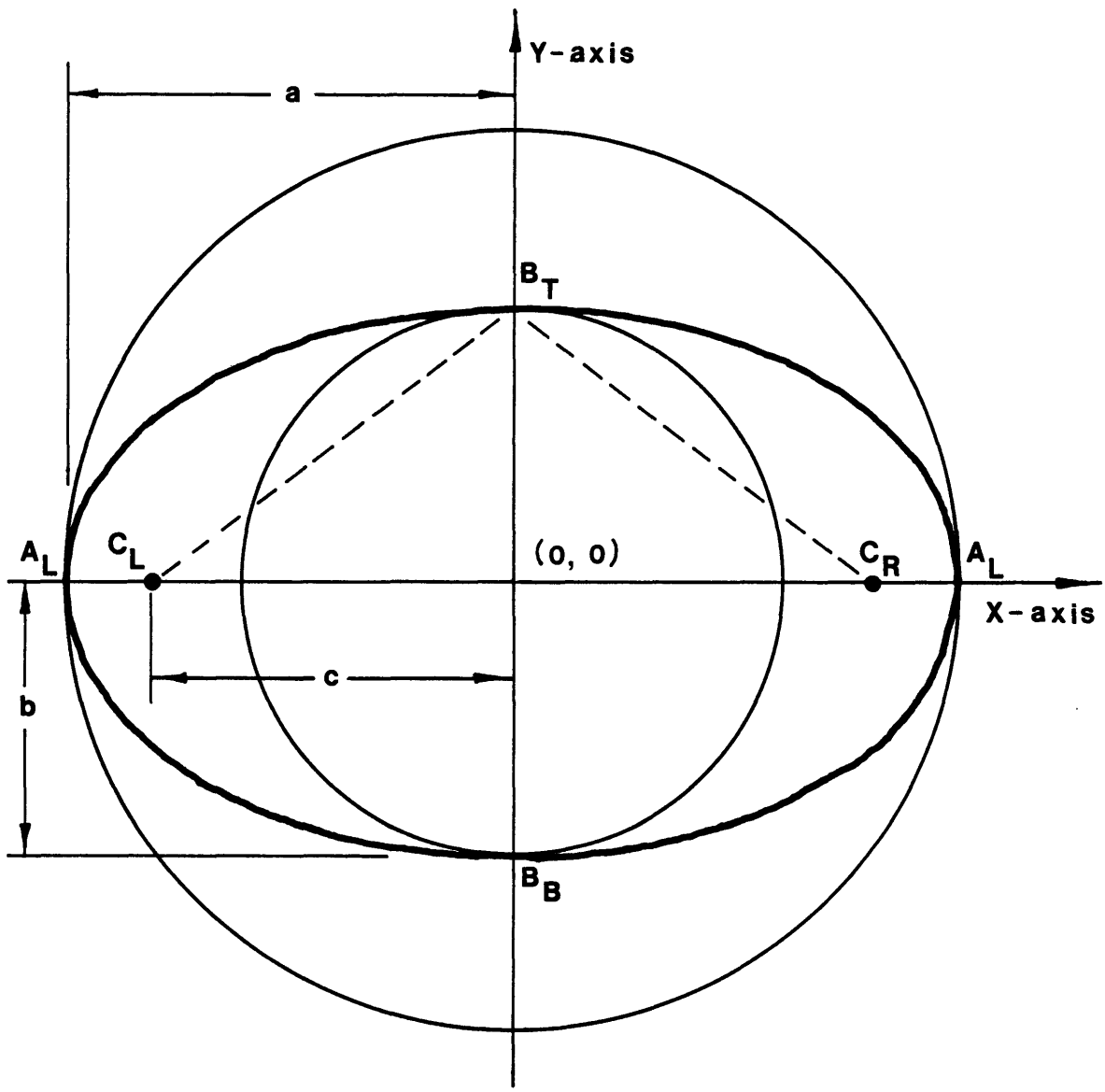

Fig. 2-8 An ellipse circumscribed by the circles which define it.

The ellipse has two foci, whose distance from the Y-axis is c. If one attaches either end of a string to points C_L and C_R with enough slack so that it can be stretched taut to make contact with a third point, B_T, a pencil can be inserted on the inside edge of the string and rotated about the foci to draw the ellipse which corresponds to the two circles. How to establish points C_L and C_R initially? It so happens that the length of the string necessary to draw the ellipse equals 2a. If we inspect the triangle C_L - C_R - B_T, formed when the pencil is at B_T, we find two right angles back to back (dotted line in Fig. 2-8). The hypotenuse of each is equal to half of our string length, or a. The vertical leg of both triangles is b, and the remaining leg is c. Therefore:

$$c^2 = a^2 - b^2 \qquad \text{Eqn. 2-29}$$

$$c = (a^2 - b^2)^{\frac{1}{2}} \qquad \text{Eqn. 2-30}$$

The circle of the first example was expressed in terms of x, y, and R:

$$x^2 + y^2 = R^2 \qquad \text{Eqn. 2-1}$$

$$\frac{x^2}{R^2} + \frac{y^2}{R^2} = 1 \qquad \text{Eqn. 2-31}$$

The ellipse can be similarly expressed by substituting the radius values, a and b of the two defining circles, in place of R:

$$\frac{x^2}{a^2} + \frac{y^2}{b^2} = 1 \qquad \text{Eqn. 2-32}$$

$$y = (b^2 - \frac{b^2x^2}{a^2})^{\frac{1}{2}} \qquad \text{Eqn. 2-33}$$

Eqn. 2-33 denotes the geometry of the ellipse. As with the

circle, if the value of y, at any point x, is multiplied by the horizontal thrust, H, we obtain the moment due to horizontal forces. This moment value is equal to the moment, M_x, due to the vertical forces of load and vertical support reactions:

$$M_x = Hy \qquad 2\text{-}11$$

As stated previously, the above relationship is always true for the hanging cable, and true for the standing arch only when there is no development of internal resisting moment. The latter condition is the dead load design criteria for these case studies. Again, the moment due to the vertical forces, M_x is also equal to the moment value for a simply supported beam, with a length equal to the span of the arch, loaded with a similar distributed load. This is true because the vertical support reactions for the beam are the same as those for the arch. Combining Eqn. 2-33 and Eqn. 2-11 establishes the following relationship:

$$M_{x/H} = y = (b^2 - \frac{b^2x^2}{a^2})^{\frac{1}{2}} \qquad \text{Eqn. 2-34}$$

$$M_x = H(b^2 - \frac{b^2x^2}{a^2})^{\frac{1}{2}} \qquad \text{Eqn. 2-35}$$

Taking the first derivative of the moment equation will give the value of shear, V_x, at any point x along the X-axis:

$$M_x' = V_x = H(\tfrac{1}{2}(b^2 - \frac{b^2x^2}{a^2})^{-\frac{1}{2}}(-\frac{2b^2x}{a^2})) \qquad \text{Eqn. 2-36}$$

The second derivative of the moment equation gives the value of the load, p_x, at any point x along the X-axis:

$$M_x'' = p_x = H(-\tfrac{1}{4}(b^2 - \frac{b^2x^2}{a^2})^{-\frac{3}{2}}(\frac{-2b^2x}{a^2})(\frac{-2b^2x}{a^2}) + (\frac{-2b^2}{a^2})\tfrac{1}{2}(b^2 - \frac{b^2x^2}{a^2})^{-\frac{1}{2}})$$

Eqn. 2-37

$$p_x = H(\frac{-b^4x^2}{a^4}(b^2 - \frac{b^2x^2}{a^2})^{-\frac{3}{2}} - \frac{b^2}{a^2}(b^2 - \frac{b^2x^2}{a^2})^{-\frac{1}{2}}) \qquad \text{Eqn. 2-38}$$

let $g = x/a$

$$p_x = H(\frac{-bg^2}{a^2}(1 - g^2)^{-\frac{3}{2}} - \frac{b}{a^2}(1 - g^2)^{-\frac{1}{2}}) \qquad \text{Eqn. 2-39}$$

$$p_x = -H(\frac{b}{a^2}\frac{(g^2 + (1 - g^2)))}{(1 - g^2)^{\frac{3}{2}}}) \qquad \text{Eqn. 2-40}$$

$$p_x = \frac{-Hb}{a^2(1 - g^2)^{\frac{3}{2}}} \qquad \text{Eqn. 2-41}$$

Again, since the distributed load acts downward, $M_x = -p_x$:

$$-p_x = \frac{-Hb}{a^2(1 - g^2)^{\frac{3}{2}}} \qquad \text{Eqn. 2-42}$$

$$p_x = \frac{Hb}{a^2(1 - g^2)^{\frac{3}{2}}} \qquad \text{Eqn. 2-43}$$

Substituting x^2/a^2 back in for g^2:

$$p_x = \frac{Hb}{a^2(1 - x^2/a^2)^{\frac{3}{2}}} \qquad \text{Eqn. 2-44}$$

And, substituting y^3/b^3 in for the $(1 - x^2/a^2)^{\frac{3}{2}}$ term, Eqn. 2-44 reduces to:

$$p_x = \frac{Hb^4}{a^2y^3} \qquad \text{Eqn. 2-45}$$

Like the circle, if $x = 0$, (where $y = b$), the value of p is relatively small:

$$p_o = \frac{Hb}{a^2} \qquad \text{Eqn. 2-46}$$

Replacing Hb/a^2 with p_0 in Eqn. 2-45, we obtain:

$$p_x = p_0(b/y)^3 \qquad \text{Eqn. 2-47}$$

The load, p_x, varies inversely as the cube of the ordinate, y. If $x = \pm a$, where y goes to 0, p becomes infinity. These characteristics are also similar to the circle. For both the semicircular and semi-elliptical arches, as the sides of the arch approach the vertical plane, the loads must increase dramatically to turn the resultant force straight down (Fig. 2-9).

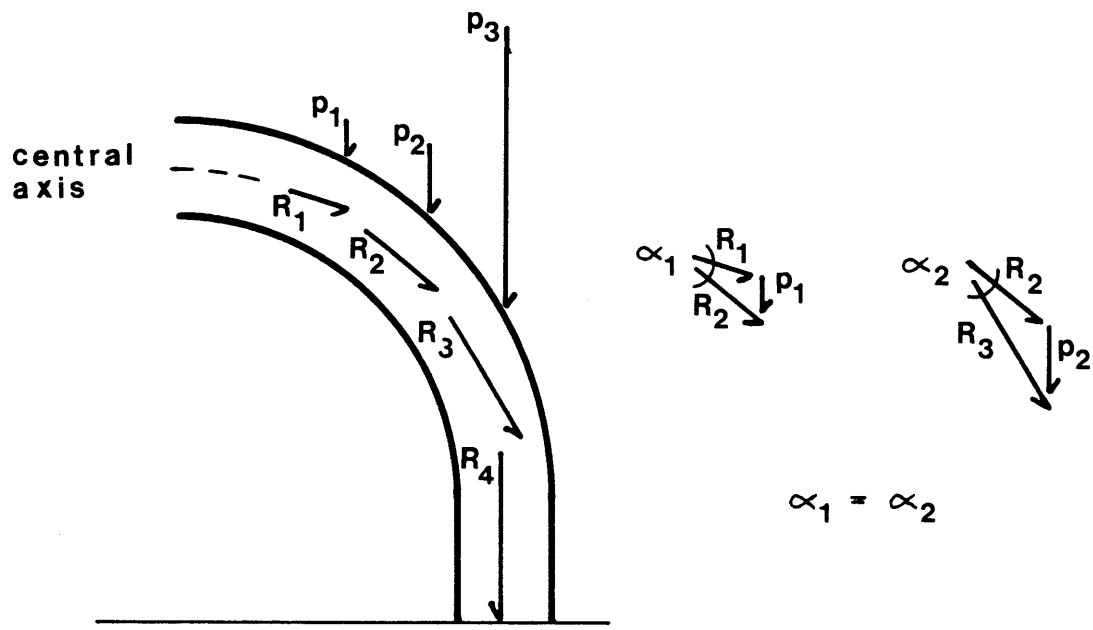

Fig. 2-9a) Diagram of the relationship of the distributed load and the force resultants for a semicircular arch.

b) Force vector diagrams of two different points on the arch.

where: p = distributed load

R = force resultant representing the addition of previous force resultants and loads

note: for curvature of the circle to remain constant, $\alpha_1 = \alpha_2$

In the above diagram the magnitude of the load, p, is determined by the force which is necessary to maintain the force resultant of previous loads pointing in line with the body of the arch in a position close to the central axis. The direction and position insure that the arch will remain in compression. The distributed dead load that would produce compressive stress with no bending stress for the elliptical arch is shown in Fig. 2-10.

From Eqn. 2-45 it is clear that the load, p_x, varies directly with the horizontal thrust, H. By intuition we would expect a rise in the horizontal thrust to compensate an increase in the distributed load. But, as the arch becomes vertical toward the supports and the resultant thrust approaches the vertical, the support reaction needed to equilibrate it also approaches the vertical in the opposite direction. If this is true, what need is there for a horizontal component to the support reaction? What happens to the horizontal thrust at the supports; a component that is supposedly constant throughout? Since the load is undefined at the limit where y goes to zero, H maintains its constant value, but with respect to an infinite value of the shear, V_x, the value of H is negligible.

With this introduction to the process of defining the most efficient dead load distribution for curved spanning structures,

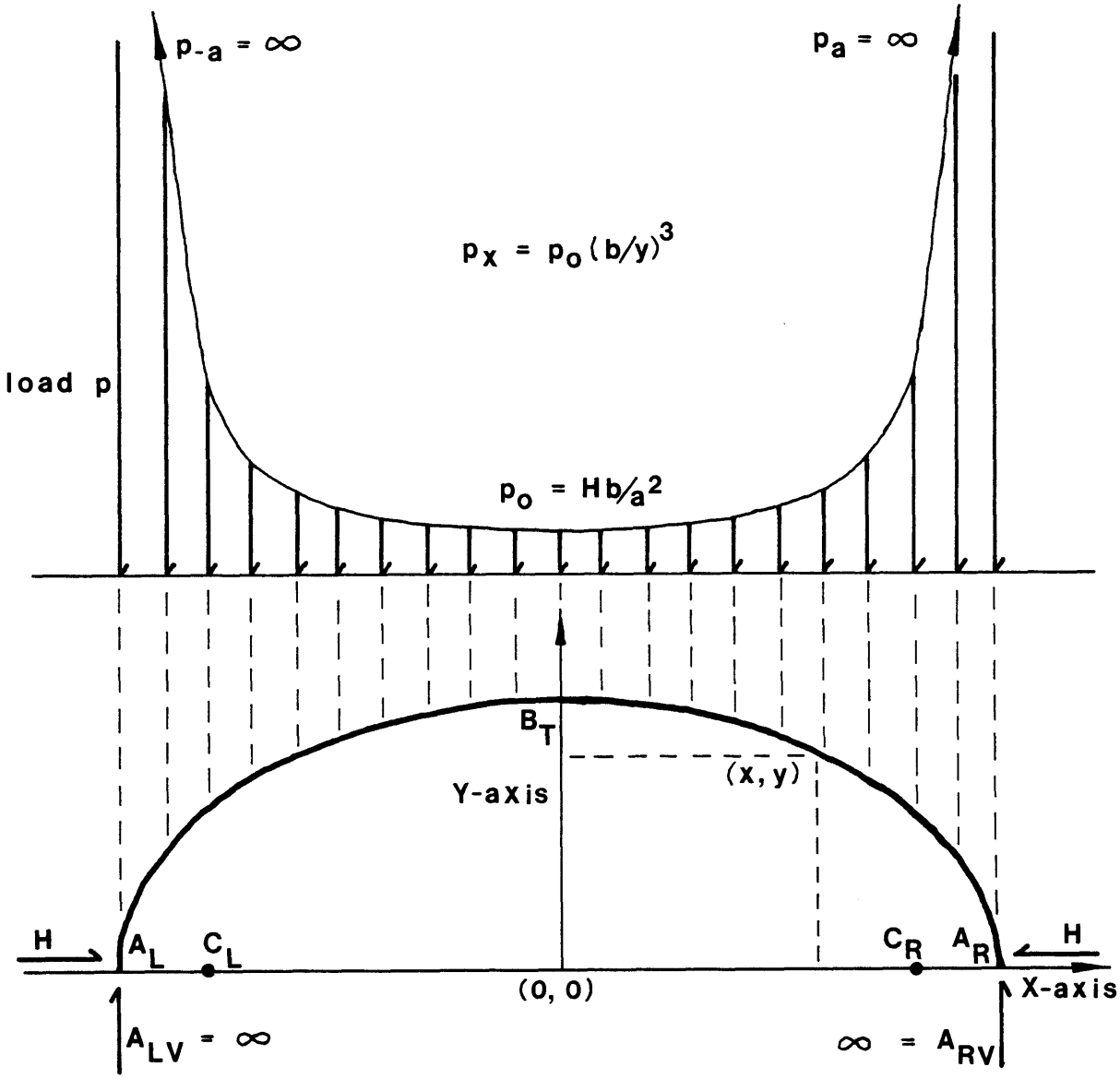

$$y = \left(b^2 - \frac{b^2 x^2}{a^2}\right)^{1/2}$$

Fig. 2-10 Diagram of the theoretical distributed dead load for a semielliptical arch.

where: H = horizontal thrust

A_{LV} and A_{RV} = vertical reactions at the supports

we are now ready to discuss the effects of live loads. In Chapter III, with the aid of the catenary and the parabola, I will outline a method for designing an arch structure to sustain the various kinds of live loads to which it is subjected. First, I will briefly summarize the dead load distributions which work most efficiently when combined with these curves. Next, a graphic comparison of the arch shapes and the corresponding dead loads for the circle, ellipse, catenary, and the parabola will be presented. A design problem encompassing dead and live load factors for a barrel vaulted sports arena will conclude Chapter III.

III. Catenary and Parabola

A catenary is the curve formed by a completely flexible cable hung between two fixed points. The word catenary is derived from the latin word, catena, meaning chain. In terms of loading, the funicular shape taken by a cable loaded uniformly by its own weight along its length is that of the catenary. The catenary is the logical form to support the weight of the arch itself, since naturally the weight of the arch is distributed uniformly along its length. Supporting the dead load of a structure is often the single most important consideration. Therefore, the catenary is a significant shape in structural design. Observe the symmetrical arrangement of a catenary in Fig. 3-1.

The engineer Prem Krishna in his book, Cable-Suspended Roofs, derived the expression for the interrelation of the length of the cable, L, the load, q per unit length of the cable, and the vertical projection of q onto a horizontal line, p_x:[3]

$$p_x = -q(d_{L/d_x}) \qquad \text{Eqn. 3-1}$$

---

[3] Krishna, Prem Cable-Suspended Roofs (New York, 1978) McGraw-Hill Inc. p.30

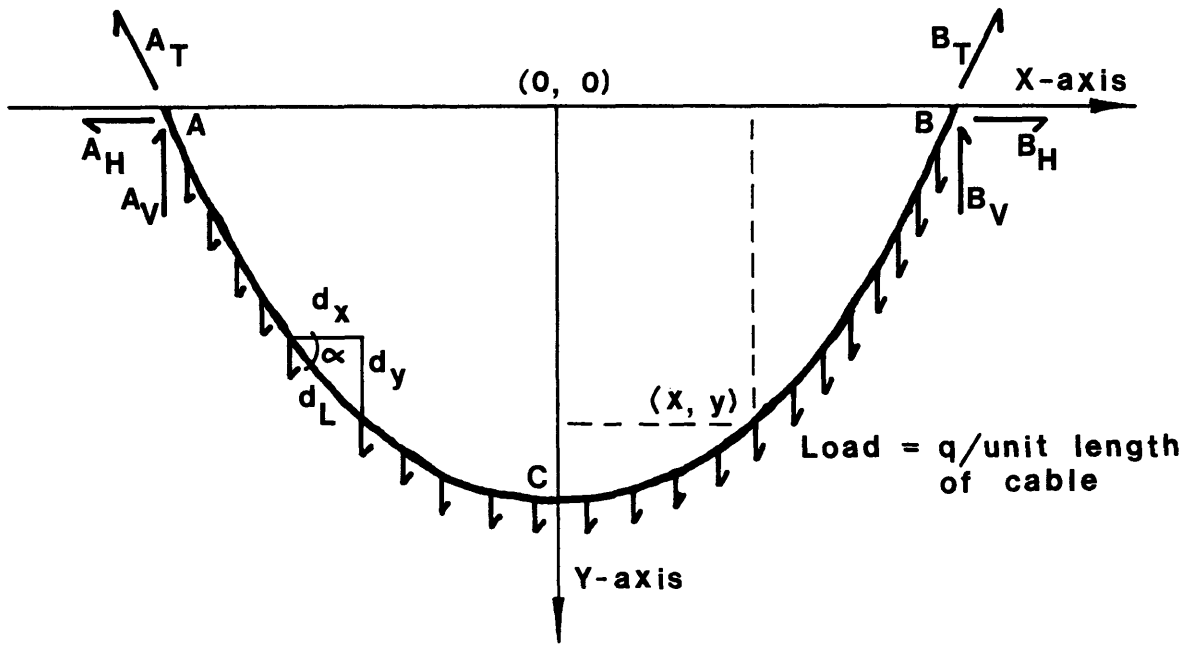

Fig 3-1 Symmetrical cable loaded uniformly along its length to form a catenary.

where: d_L = differential change in the length of the cable

d_x = differential change in the horizontal component of the slope of the cable

When we examine the horizontal load distribution which gives the catenary its form we find that the load, p_x, is equal to the suspended load, q, at the middle of the span; where d_L/d_x becomes one. At this point the slope of the cable is zero. Towards either support, p_x, increases with the gradual increase of d_L/d_x. d_L/d_x varies as a function of the angle, α. If α = 45° at the supports, the load, p_x, just inside the supports equals 1.4q. The distribution also holds for the standing arch with no bending moment, where q

represents the load per unit length of the arch. The distribution of p_x, the vertical projection of q, is shown suspended over a catenary arch in Fig. 3-2 below.

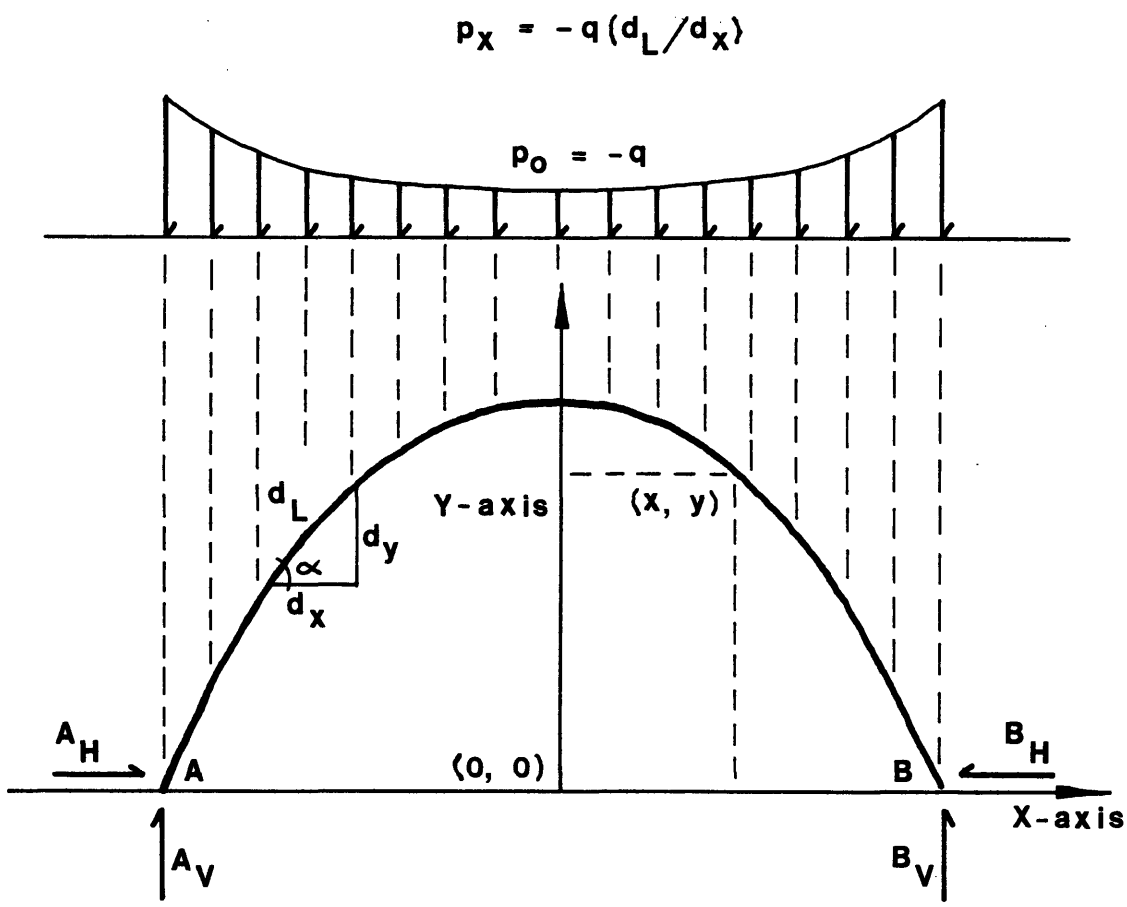

Fig. 3-2 Diagram of distributed dead load for a catenary arch.

The load variation is nowhere near as extreme as either the semicircular or semielliptical arches. Having approached a more uniform load distribution with the catenary, the next step would

be to ask what funicular form is generated by the uniform load?

To secure the result the process that has been used until now needs to be reversed. To begin, I restate the equation of the second derivative of the ordinate, y'', this time with a constant load, p_x, and the horizontal thrust, H: $y'' = -p_x/H$. Integrating twice yields the moment due to vertical forces, M_x, divided by the horizontal thrust, H (Eqn. 2-12):

$$\iint y''d_x = -\iint \frac{pd_x}{H} = y = M_x/H \qquad \text{Eqn. 3-2}$$

Dividing M_x by the horizontal thrust, H, defines the ordinate, y, at any point x along the X-axis. Knowing y enables us to describe the geometric form. The first integral of Hy'' gives the shear force, V_x:

$$\int_0^x Hy''d_x = -\int_0^x pd_x = V_x \qquad \text{Eqn. 3-3}$$

where: x = variable which operates between the limits 0 and L.

$$V_x = -p_x + C_1 \qquad \text{Eqn. 3-4}$$

To find C_1 we must examine the boundary conditions and substitute. We know that for a uniform load the shear force will be 0 at x = 0, at the apex of the arch. Therefore:

$$V_o = 0 \quad -p(0) + C_1 \qquad \text{Eqn. 3-5}$$

$$C_1 = 0 \qquad \text{Eqn. 3-6}$$

$$V_x = -px \qquad \text{Eqn. 3-7}$$

Now, integrating the shear equation yields the moment equation:

$$\int_0^x V d_x = -\iint_0^x p x d_x = M_x \qquad \text{Eqn. 3-8}$$

$$M_x = -px^2/2 + C_2 \qquad \text{Eqn. 3-9}$$

The moment due to the vertical load becomes 0 when $y = 0$, and $x = \pm L/2$:

$$M_o = 0 = \frac{-p(L/2)^2}{2} + C_2 \qquad \text{Eqn. 3-10}$$

$$C_2 = pL^2/8 \qquad \text{Eqn. 3-11}$$

$$M_x = -px^2/2 + pL^2/8 \qquad \text{Eqn. 3-12}$$

This is the equation of a parabola with Y-axis intercept, $pL^2/8$. Parabolas have the general form:

$$y = ax^2 + bx + c \qquad \text{Eqn. 3-13}$$

where: c = Y-axis intercept

$x = -b/2a$ where slope equals zero at the apex

In Eqn. 3-12 above, $b = 0$. Another way to think of uniform load and its relationship to the parabola is to imagine the effect that gravity has on a ball as it moves through space. If you throw a ball into the air with some amount of horizontal force, the curve it traces as it ascends and descends is that of the parabola.

The parabola is the funicular shape that a cable will assume under a horizontally uniform load. For the arch it is the shape that will allow a horizontally uniform load to be carried with no bending moment. This is the case which satisfies the equation: $y = M_x/H$. Any parabola with the character of Eqn. 3-13 will satisfy these requirements. By manipulating the parameters a, b,

and c, we can adjust the curvature of the parabola and determine its location relative to the X and Y axes. The curvature refers to the sharpness of the curve at any particular point. Once three points are fixed the nature of the parabola is determined. By setting the span and the height of the arch (or sag of the cable) a specific parabola with a given curvature is defined (Fig. 1-5). The location of the X and Y axes is arbitrary and a matter of convenience.

By establishing the span, L, the height, h, and setting the position of the parabola with regards to the axes, we fix the values of a, b, and c. This enables us to draw the arch. Another method is to plug values of x into the equation, $y = M_x/H$, to find the ordinates of the arch. The latter method is useful because the process yields the value of H. Dividing M_x by a constant, H, does not change the parabolic characteristics of the function. First H must be found. The maximum height of the arch can be set to any value. Let the arch be symmetrical with span, L, and with the maximum y value occuring at the Y-axis intercept, where $x = 0$. Let $y = L/2$ at this point. $M_x = pL^2/8$ when $x = 0$. Therefore:

$$H = M_x/y = \frac{pL^2/8}{L/2} = pL/4 \qquad \text{Eqn. 3-14}$$

$$y = M_x/H = \frac{-px^2/2 + pL^2/8}{pL/4} \qquad \text{Eqn. 3-15}$$

$$y = -2x^2/L + L/2 \qquad \text{Eqn. 3-16}$$

With Eqn. 3-16 we can plot the rest of the arch. For example at $x = L/4$, $y = 3L/8$; at $x = 3L/8$, $y = 7L/32$ (Fig. 3-3).

As the sides of the parabolic arch approach the supports, the

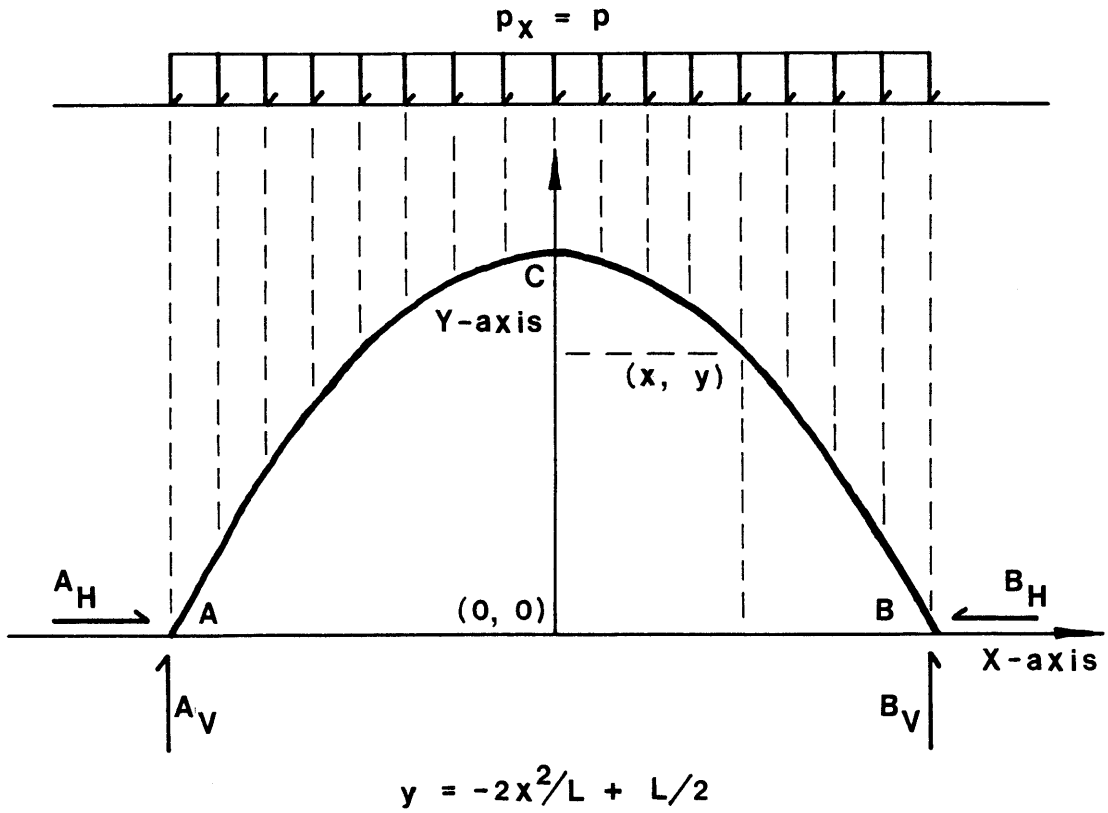

Fig. 3-3 Diagram of distributed dead load for a parabolic arch.

curvature diminishes and the arch straightens out. As the force resultant due to vertical loads from above gets larger towards the supports, the addition of the same uniform load continues to change its direction downward, but with less and less degree of change. The arch which allows this force resultant to lie near the central axis, maintaining the arch in compression, is that curve whose legs straighten out with the greater distance from the apex (Fig. 3-4).

The parabolic arch is right at home under such uniform loadings

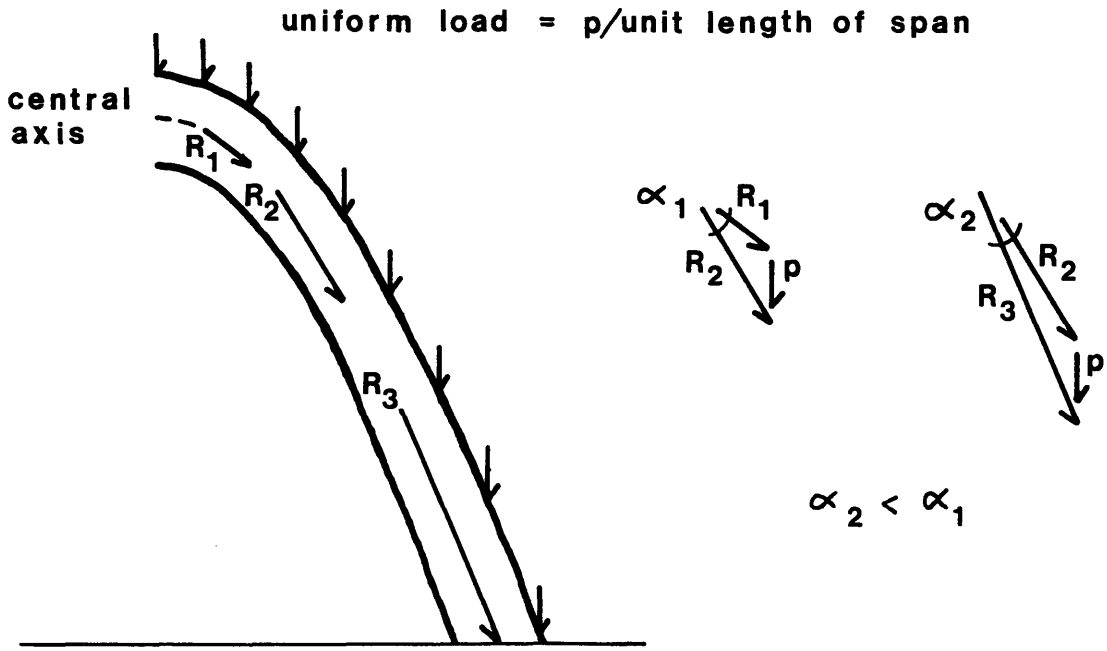

Fig. 3-4a) Diagram showing the relationship of uniform load and force resultants for the parabolic arch.

b) Force vector diagrams of two different points on the arch.

where: p = uniform load

R = force resultant representing the addition of previous force resultants and load

note: $\alpha_2 < \alpha_1$ holds true because the curvature diminishes towards the supports

as bridge decks and flat floors and roofs. The catenary makes good structural sense in applications such as roofs for large auditoriums or sports stadiums where the weight of the roof is the major load. Speaking purely in terms of structural efficiency, the circle is appropriate where the dead loads approximate the loading shown in

Fig. 2-5. The surmounting layer of earth over an underground drain pipe is near typical of such a loading. This is true partly because of the orientation of the vertical load and partly because the earth supplies a force component perpendicular to the surface of the drain pipe. For the circle, pure compression or pure tension result from uniform loadings placed perpendicular to the surface (Fig. 1-6). Because of the relative ease of fabricating structural circles, the curve has applications in many instances where the dead load is less favorable. As with all curves, aesthetic reasons may supersede structural rationale, justifying selection. Superimposing the semicircle, semiellipse, catenary, and the parabola and their most appropriate loadings presents a relative picture of the interrelationships.

The circle is the only one of these curves which is somewhat inflexible. All the rest have the ability to accept any maximum height, h, for any given span, L. Due to the spatial limitations of many architectural programs, this characteristic places a slight handicap against using the circle. If the program height for a space is less than half the span, segments of the circle or sphere are usable. But, if the height is greater than L/2, the difference in elevation can be made up only with a supporting drum. In the diagram below I have allowed the height to be greater than L/2 to enable the semicircle (raised on a drum) and the semiellipse to participate in the comparison (Fig. 3-5a). The span and the enclosed area are consistent for all four examples. Fig. 3-5b shows

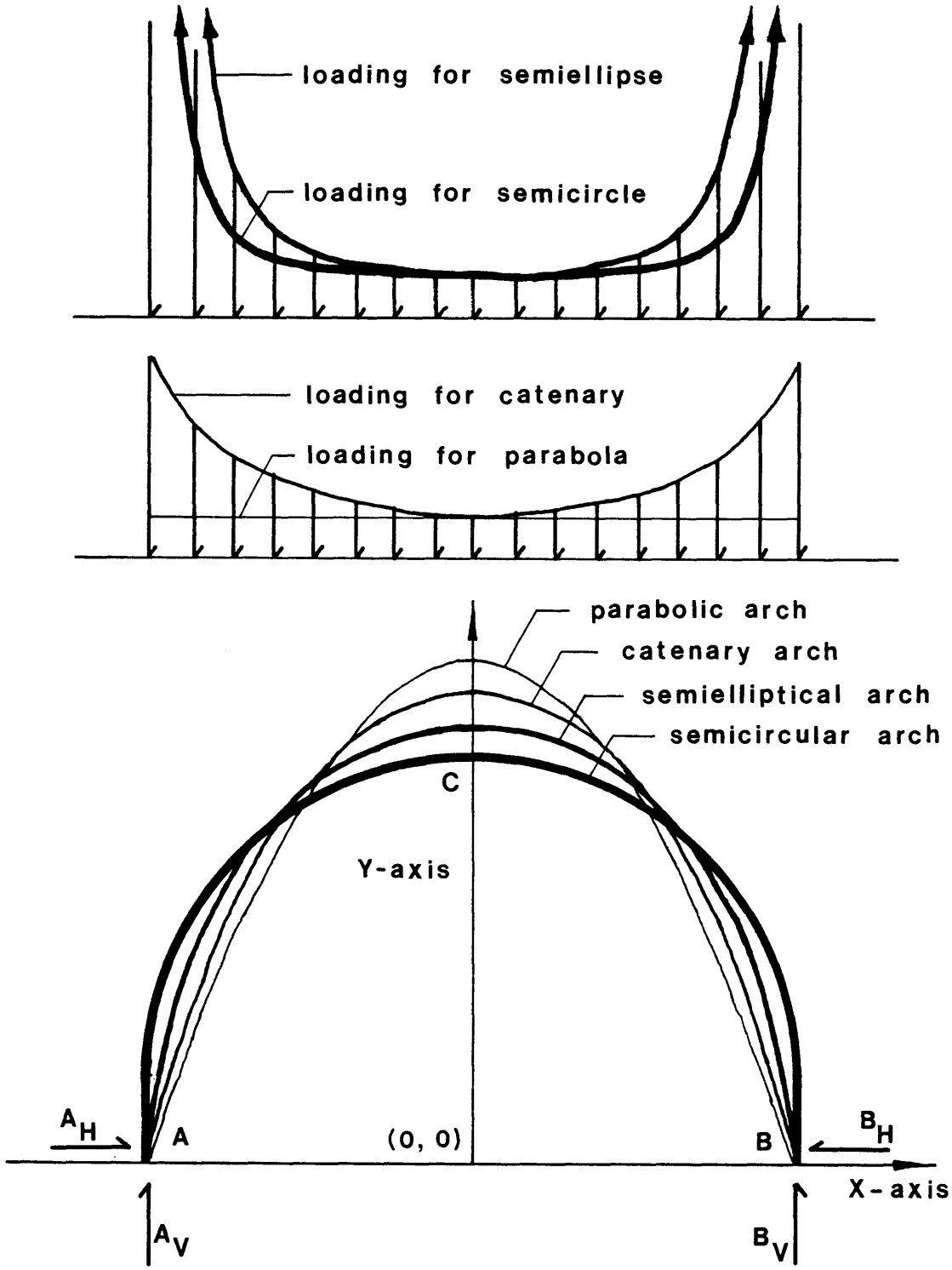

Fig. 3-5a Superimposition of arch forms and the most efficient relative loadings. All arches have similar span and enclosed area.

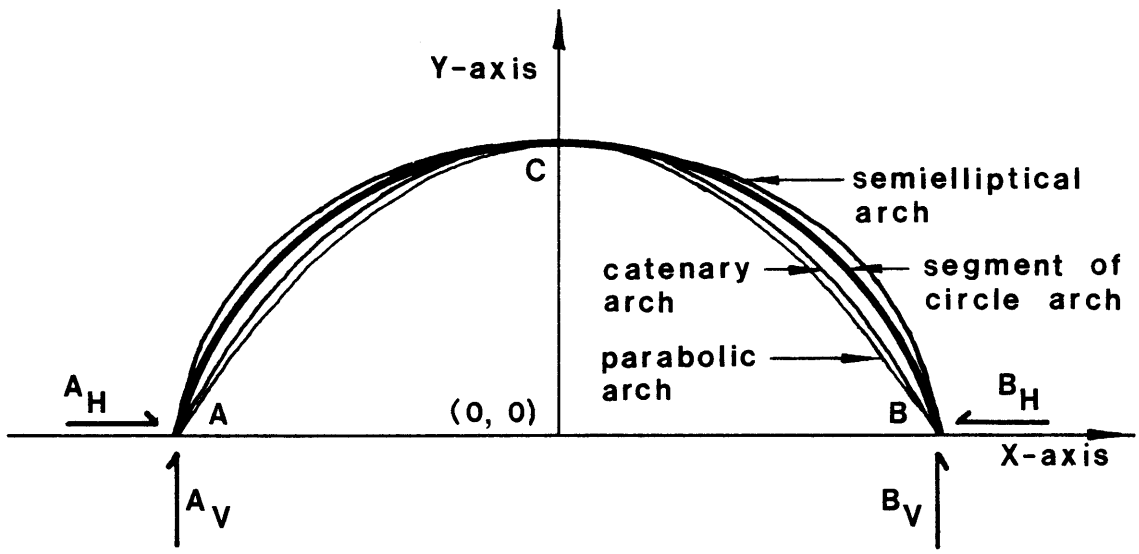

Fig. 3-5b Superimposition of arch forms. All arches have the same span and maximum height.

the four curves as arches where the parameters of span and maximum height are constant for all.

The easiest of the loads in Fig. 3-5 to conceptualize and work with is the uniform load. Because of this reason I would like to use the parabola to demonstrate a design process for a parabolic barrel vault with stiffening ribs. In this problem the challenge of designing the roof structure of a sports arena is presented. The roof consists of reinforced concrete arches spanning 260 feet, spaced 30 feet apart, which carry a thin reinforced concrete shell roof. Ideally, the shape this loading suggests is the catenary. However, the design process is basically the same for the parabola.

The greater facility in working with the parabolic shape and the uniform load make these the best choice for the sample design problem. The layout is presented below in section with the end buttresses set at different levels (Fig. 3-6). A clear height of 60 feet exists at the center of the span.

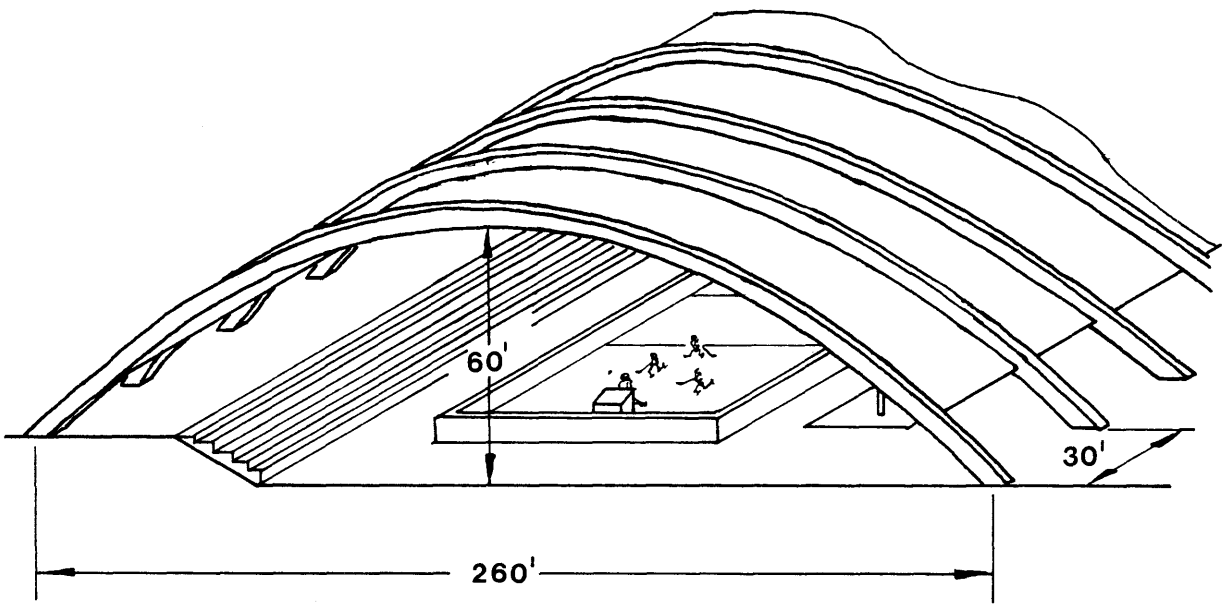

Fig. 3-6 Parabolic roof vault for sports stadium.

The dead load requirement for each arch is a uniform horizontally distributed load of 3.0 kips/linear foot (Fig. 3-7). One kip equals one thousand pounds. The dead load figure of 100 lbs./square ft. accounts for the weight of the arch and the concrete shell (where

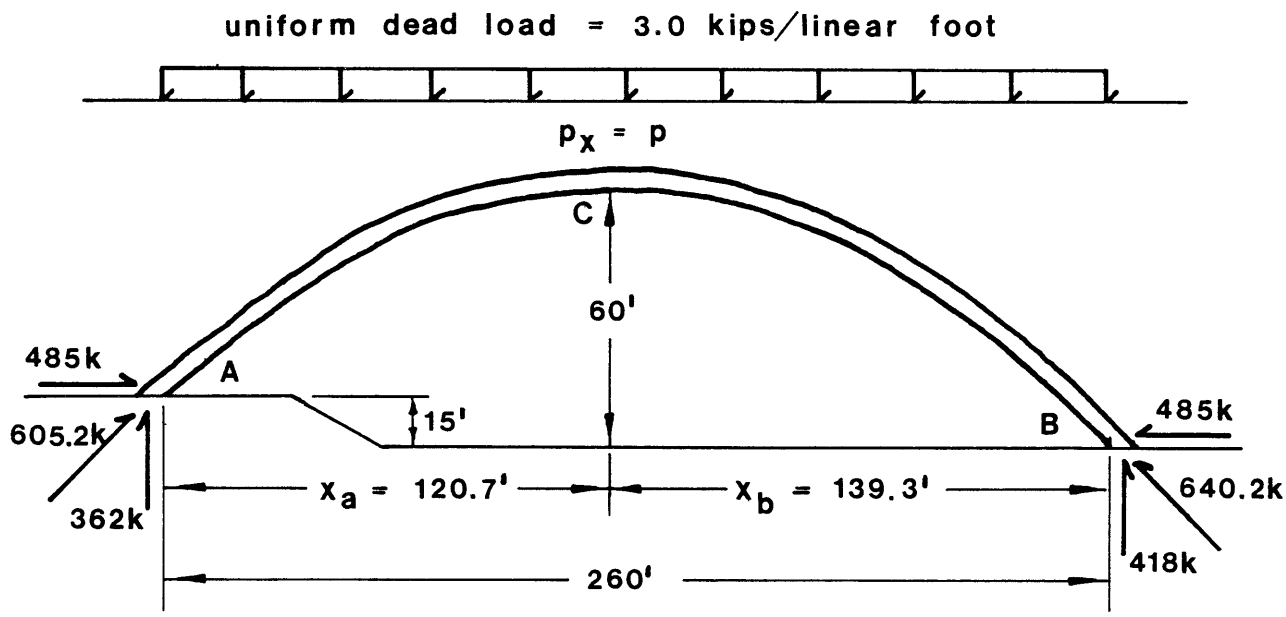

Fig. 3-7 Parabolic arch in section with the dead load shown above and the resulting total reaction forces indicated below (horizontal and vertical components shown).

where: $M_{x/y} = A_H = B_H$

$A_V = px_a$

$B_V = px_b$

concrete = 150 lbs./cubic ft.), the roofing material, and any mechanical systems hung below. The live load is calculated asymmetrically to design for the "worse situation" loading. The parabolic arch carries the dead load in compression along the

longitudinal axis, but must support asymmetrical live loads partially by its resistance to bending.

If there was a live load covering the entire roof, the combined effect of the dead and live loads would be 4.5 kips/linear ft.. This figure allows 50 lbs./s.f. for snow and wind loading. The diagram below shows the resulting reaction forces (Fig. 3-8).

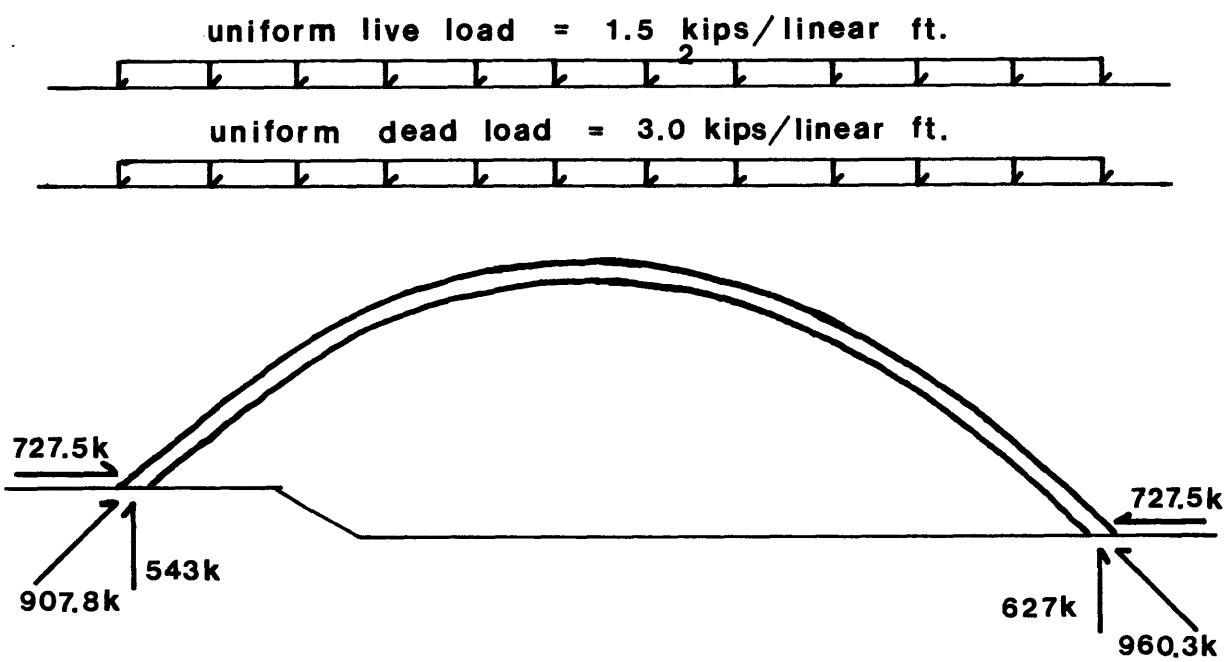

Fig. 3-8 Parabolic arch in section with the uniform dead and live loads shown above and the resulting reaction forces shown below.

The greatest compression stress would occur in the right leg of the arch where the maximum force due to loading equals 960.3 kips:

$$\text{compressive stress} = \sigma = 960.3/bd \qquad \text{Eqn. 3-17}$$

where: b = width of arch member

d = depth of arch member

With an ultimate stress of concrete, f_c = 4,000 p.s.i., and a factor of safety, F. of S. = 3, the allowable stress, F_c = 4,000/3 = 1,333 p.s.i. = 1.333 k.s.i.. With the above information the cross sectional area can be computed, A_{xs} = bd:

$$A_{xs} = P/F_c = 960.3/1.333 = 720 \text{ s.i.} \qquad \text{Eqn. 3-18}$$

where: P = axial load

The stress due to compression along the longitudinal axis presents no major structural difficulty. A cross section for the arch of 18" x 40" would suffice. A far more serious factor in structural design is the bending moment due to an asymmetrical load and its potential to buckle the arch. Buckling is a phenomenon demonstrated by standing a postcard on its edge. Applying a load with your finger to the edge of the postcard bows the card to the side. This is buckling. The critical buckling load is reached when the card collapses. Imagine the moment caused by a live load occuring totally on one side of the parabolic arch. The combined effect of snow and wind might produce such a load. The reaction forces resulting from just the live load are shown below in Fig. 3-9.

The dotted line in Fig. 3-9 represents the pressure line of the live load. The pressure line indicates the arch whose shape would resist the trajectory of resultant load forces in compression only. Inverted, the dotted line represents the funicular shape that a cable

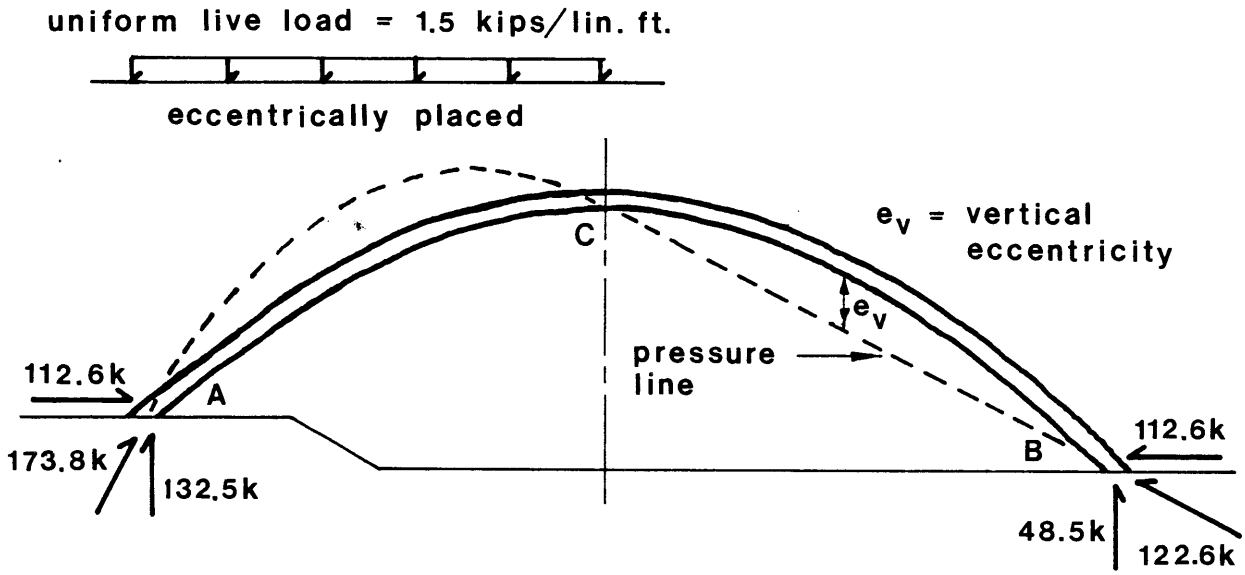

Fig. 3-9 Parabolic arch in section with eccentrically placed uniform live load. Reaction forces due to live load only.

would assume under such a load. The eccentricity between the arch and the pressure line is the greatest at approximately the quarter spans. Therefore, the moment will be greatest at these points: $M = He_v$, where H = horizontal thrust, and e_v = vertical eccentricity. Assume the pressure line passes through the apex. Consequently, there is no moment at this point and it can be modeled as a hinge. If the support connections are also treated as hinges the model takes the form of a three-hinged arch. This simplifies the process for finding the support reactions. Taking moments about points A and C in Fig. 3-9 will give two equations with two unknowns. Solving these simultaneously will yield the answers:

$$+\circlearrowleft \Sigma M_A = -60.4(181K) - 15B_H + 260B_V = 0 \qquad \text{Eqn. 3-19}$$

$$+\circlearrowleft \Sigma M_C = -60B_H + 139.3B_V = 0 \qquad \text{Eqn. 3-20}$$

$$B_V = 48.5K, \quad A_V = 132.5K, \quad B_H = A_H = 112.6K$$

Reactions in line with the pressure line at the supports:

left support reaction = 173.8K

right support reaction = 122.6K

e_V at the 1/4 point of the right leg: 45 - 30 = 15'

$$M_{\frac{1}{4}} = He_V = 112.6K(15') = 1690K' \qquad \text{Eqn. 3-21}$$

The arch must stand up to a 1690K' moment at the quarter span on either side. The arch must take the bending in either direction at all points: downward and upward, or inward and outward. The arch can be designed so that the cross sectional area varies directly with the changing moment. The resulting maximum stress would be constant throughout: $\sigma = M/S$ (where $S = bd^2/6$ for a rectangular cross section). If the arch is designed with a rectangular cross section, and the width, b, is held constant, the depth, d, varies directly with the square root of the moment, M (Fig. 3-10).

The arch could be designed with a uniform cross section, but this would be extremely wasteful of material. Here, I will merely figure out what the cross section of the reinforced concrete arch would have to be at the quarter span to handle the stress due to moment. I will assume a rectangular cross section in making the following calculations.

The arch must resist bending, and have the ability to withstand

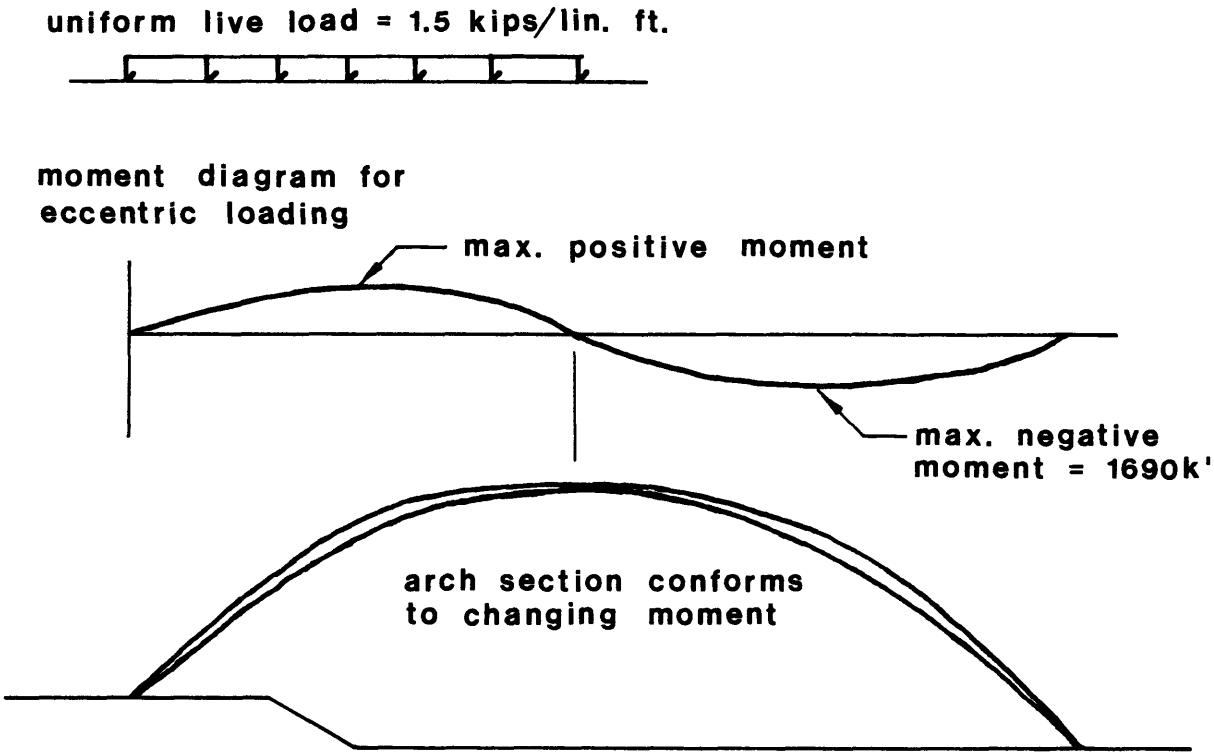

Fig. 3-10 Moment diagram for eccentrically placed live load and the parabolic arch section that would normalize the maximum stress resulting from this moment.

buckling as well. Critical buckling is when a member continues to deflect with no further resistance under the pressure of a given load. The result is collapse. The load that induces this effect is the critical buckling load. The formulas that determine the arch's capability to withstand buckling are those which govern the behavior of columns. The arch can be split at the apex. Each side can be analyzed independently as a column. Since the right side of the sample arch is longer and more inclined to buckle, I will analyze

its behavior and allow the design of its cross section to control the design of the left side. The approximate length of the right leg is 150 feet.

There exist two formulas developed by Bernouli Euler to guide the design of the arch. The first describes the critical buckling load for a column, P_{cr}, and the relationship it has to the modulus of elasticity, E, the moment of inertia, I, and the length of the specimen, L:

$$P_{cr} = \frac{\pi^2 EI}{(kL)^2} \qquad \text{Eqn. 3-22}$$

where: k = the effective length factor reflecting the nature of the end conditions

I assume k = 1, a value which models the condition of a pin connection at both ends, rotation free, translation fixed. A pin at the buttress end eliminates a moment connection and allows the arch member to be attenuated as it approaches the ground. Greater room for circulation is thereby permitted. The top end of the arch member is attached to the other leg of the arch. For easier analysis I assume the existence of a hinge at the apex. The model is therefore a three-hinged arch. In reality the top end can translate, but again, to simplify the design process I assume that it is translation fixed.

The critical buckling load, P_{cr}, varies inversely as the square of the length, L. This interaction is expressed by the graph on the following page (Fig. 3-11). Note that as L diminishes there comes

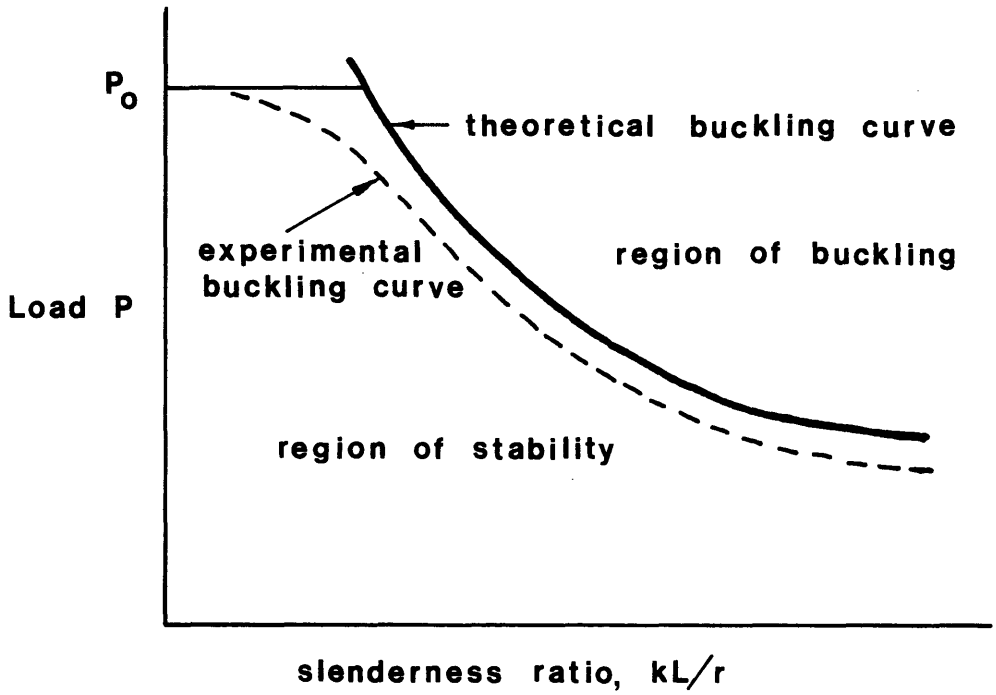

Fig. 3-11 The buckling curve, the relationship of load, p, to the slenderness ratio, kL/r.

where; P_o = ultimate compressive capacity of the material

kL/r = slenderness ratio

k = effective length factor reflecting end conditions

L = length of the specimen

r = $(I/A)^{1/2}$, the radius of gyration

I = moment of inertia

A = cross sectional area

a point where the crushing strength (compressive capacity) of the specimen controls the value of P_{cr}. Obviously, P_{cr} can't exceed the value of P_o, the crushing strength of the specimen. The experimental

buckling curve presents lower values of P_{cr} for any given length, L. Imperfections in the material of the specimen and distortions in the actual shape of the specimen account for the discrepancy.

If a column stands perfectly vertical and is loaded smack in the middle, above the central axis, then Eqn. 3-22 states that there exists a theoretical load, P_{cr}, which will fail the column. The load that will fail the column is sufficiently reduced if there is any initial imperfections in the column such as crookedness. Crookedness introduces additional stresses caused by the moment equal to the load, P, times the eccentricity, e: Pe. The graph below indicates the effect of the additional stress (Fig. 3-12).

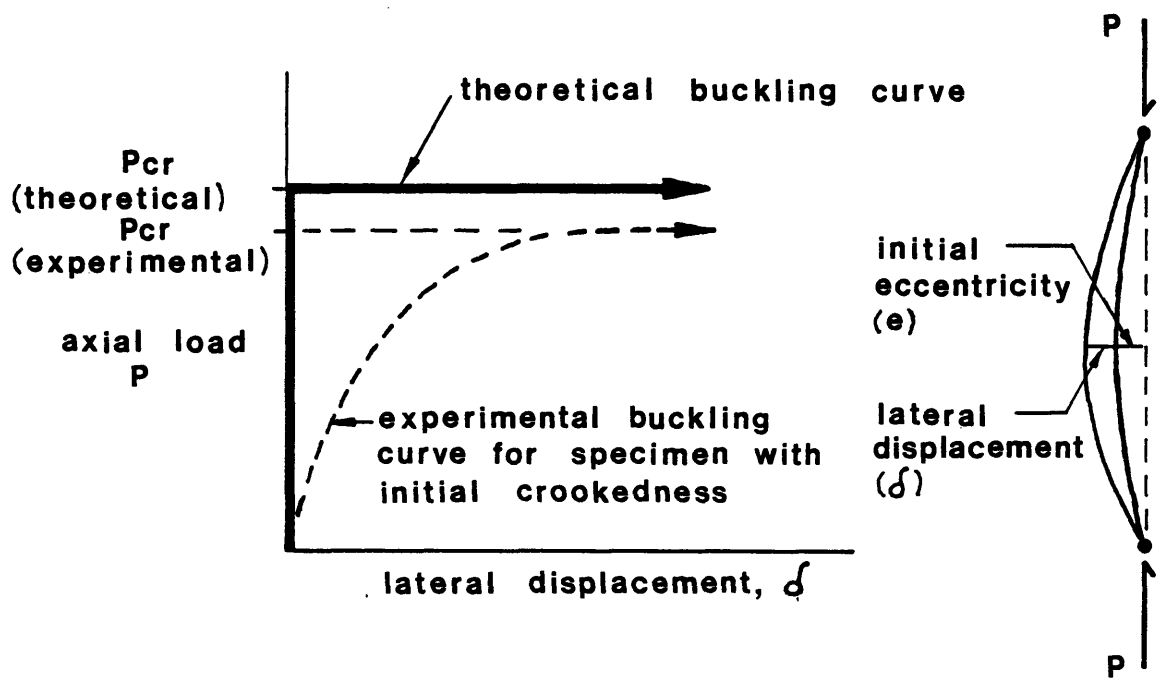

Fig. 3-12 Comparison of theoretical and experimental buckling curves.

Because of the disastrous effect that moment can have on a column's performance, columns must also sustain moment stresses. The other relevant Euler equation defines the interaction between axial capacity and moment capacity of a column specimen:

$$\frac{P}{P_o} + \frac{1}{1 - \frac{P}{P_{cr}}}\left(\frac{M}{M_o}\right) \leq 1 \qquad \text{Eqn. 3-23}$$

where: P = axial load (kips)

P_o = theoretical ultimate compressive capacity of the material (kips)

P_{cr} = theoretical critical buckling load (kips)

M = maximum moment (kip-inches)

M_o = theoretical ultimate moment capacity of the specimen (kip-inches)

If we are working with loads that stress the specimen to its limit (where the left side of Eqn. 3-23 equals 1) then the following two statements must be true:

a) If the maximum moment increases then the axial load must decrease to maintain equilibrium.

b) If the axial load increases then the maximum moment must decrease to maintain equilibrium.

The maximum moment is the moment created by the maximum initial eccentricity, e. The term, $\frac{1}{1 - P/P_{cr}}$, is an adjustment factor which accounts for the displacements (the additional eccentricities) which occur under load.

Consider the right leg of the parabolic arch as a column member. Given the large initial moment, due to the large eccentricity

caused by its curvature, if we design the arch so that it satisfies Eqn. 3-23, which accounts for moment effects, it should easily comply with Eqn. 3-22, where the critical buckling load, P_{cr}, is established without consideration of the moment effects.

Readily employable values need to be written for all of the variables in Eqn. 3-23 in terms of the rectangular cross section of the arch with dimensions b x d, where: b = width, d = depth. Since the concrete shell roof will laterally restrain the arch, buckling will only be possible in one dimension, either toward the outside or inside of the arch. The following parameters of steel and concrete will be used in the calculations:

f_y = 60 k.s.i. f_c' = 4 k.s.i.

F_{st} = 33 k.s.i. F_c = 1.33 k.s.i.

E_{st} = 30,000 k.s.i. E_c = 3,000 k.s.i.

A_{st}/A_c = 3%

where: f_y = yield stress of steel (kips/s.i.)

F_{st} = allowable stress of steel (factor of safety = 1.8)

E_{st} = modulus of elasticity of steel (kips/s.i.)

f_c' = ultimate stress of concrete (kips/s.i.)

F_c = allowable stress of concrete (factor of safety = 3.0)

E_c = modulus of elasticity of concrete (kips/s.i.)

A_{st}/A_c = ratio of area of steel to area of concrete

note: Throughout calculations all terms remain in inches.

Steel reinforcing will be located in both the top and bottom layers of the arch to restrain bending in either direction (Fig. 3-13).

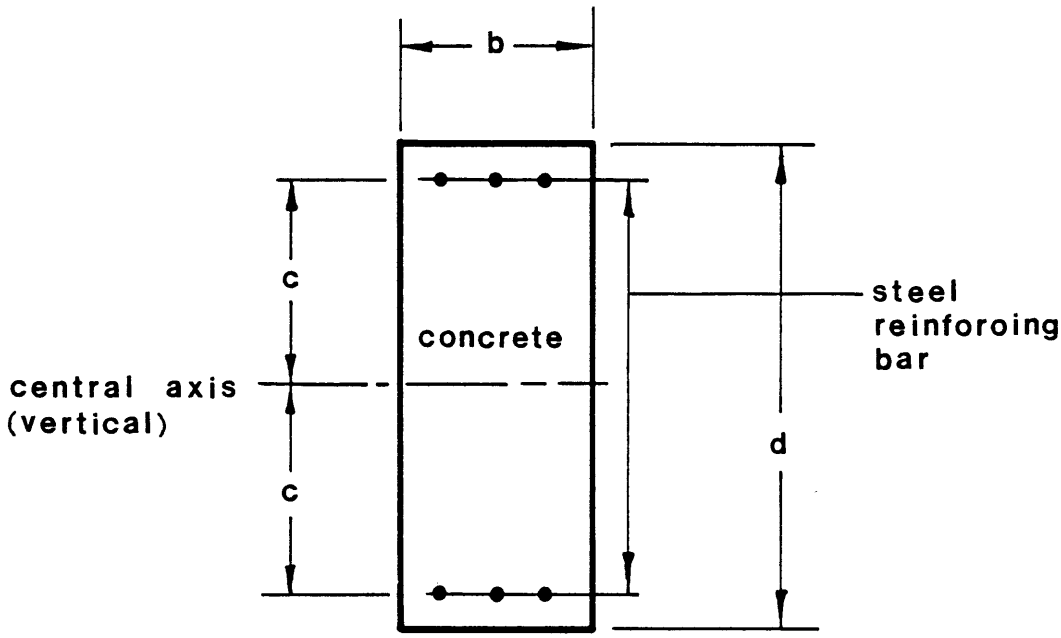

Fig. 3-13 Cross section of the parabolic arch member.

where: c = effective moment arm of steel about the central axis (c = .4d)

The area of steel must be written in terms of an equivalent area of concrete in order to establish a value for the term P_o. Steel will have an effective equivalent area of concrete 8 times the area of the steel:

$$8A_{st} = A_c \text{ equivalent} \qquad \text{Eqn. 3-24}$$

$$P_o = A_c(1 + 8(.03))F_c \qquad \text{Eqn. 3-25}$$

$$P_o = 1.24A_c(1.33) = 1.65A_c(\text{kips}) \qquad \text{Eqn. 3-26}$$

P_o is now written in terms of the allowable load because the factor of safety has been introduced

The theoretical allowable moment, M_o, is figured in terms of the effective moment of inertia of steel, I_{st}, about the central axis:

$$I_{st} = 2(.015A_c(.4d)^2) = .0048A_c d^2 \qquad \text{Eqn. 3-27}$$

$$M_o = F_{st}(I_{st}/.4d) \qquad \text{Eqn. 3-28}$$

$$M_o = 33(.0048A_c d^2/.4d) = .4A_c d \text{ (kip-in.)} \qquad \text{Eqn. 3-29}$$

To find the critical buckling load, P_{cr}, the terms on the right of Eqn. 3-22 must be defined:

$$P_{cr} = \pi^2 EI/L^2 \qquad \text{Eqn. 3-22}$$

$$EI_{comp.} = E_c I_c/5 + E_{st} I_{st} \qquad \text{Eqn. 3-30}$$

where: $EI_{comp.}$ = composite EI factor where the EI of concrete is diminished because of its weaker strength despite its larger I

$$I_c = bd^3/12 = A_c d^2/12 \qquad \text{Eqn. 3-31}$$

$$EI_{comp.} = \frac{3{,}000}{5}(A_c d^2/12) + 30{,}000(.0048A_c d^2) \qquad \text{Eqn. 3-32}$$

$$EI_{comp.} = 194A_c d^2 \qquad \text{Eqn. 3-33}$$

$$L = 150'(12\text{in./ft.}) = 1800 \text{ (in.)} \qquad \text{Eqn. 3-34}$$

$$P_{cr} = \frac{\pi^2(194A_c d^2)}{(1800)^2} = .0006A_c d^2 \text{ (kips)} \qquad \text{Eqn. 3-35}$$

The maximum moment was calculated before in Eqn. 3-21:

$$M = 1690'(12\text{in./ft.}) = 20280 \text{ (kip-in.)} \qquad \text{Eqn. 3-36}$$

The axial load, P, is equal to the reaction load along the longitudinal axis due to a uniform dead load of 3.0 kips/ft. plus the reaction load due to an eccentric uniform live load of 1.5 kips/ft.:

$$P = 640.2 + 122.6 = 762.8 \text{ (kips)} \qquad \text{Eqn. 3-37}$$

With the terms defined, Eqn. 3-23 can be restated:

$$\frac{P}{P_o} + \frac{1}{1 - \frac{P}{P_{cr}}} \left(\frac{M}{M_o}\right) \leq 1 \qquad \text{Eqn. 3-23}$$

$$\frac{762.8}{1.65A_c} + \frac{1}{1 - \frac{762.8}{.0006A_c d^2}} \left(\frac{20280}{.4A_c d}\right) \leq 1 \qquad \text{Eqn. 3-38}$$

$$\frac{462.3}{A_c} + \frac{1}{1 - \frac{1271333.3}{A_c d^2}} \left(\frac{50700}{A_c d}\right) \leq 1 \qquad \text{Eqn. 3-39}$$

Eqn. 3-23 is now in a form where potential values for b and d can be plugged in and checked. To begin, I assume b = 18", d = 90". With these dimensions, the resulting influence of the stress due to axial load and the moment stress can be found:

$$\frac{462.3}{18(90)} + \frac{1}{1 - \frac{1271333.3}{18(90)^3}} \left(\frac{50700}{18(90)^2}\right) \leq 1 \qquad \text{Eqn. 3-40}$$

$$.29 + .39 \leq 1 \qquad \text{Eqn. 3-41}$$

$$.68 \leq 1 \quad \text{OK} \qquad \text{Eqn. 3-42}$$

The moment term, .39, is responsible for .57 of the controlling factor. Yet, these dimensions are well within the limit. If b remains constant and d is diminished, there will be a change in the relative proportions of influence. The stress due to moment varies

as the square of the depth, while the stress due to load along the longitudinal axis varies directly with the depth. Assume:

b = 18", d = 76":

$$.34 + .58 \leq 1 \qquad \text{Eqn. 3-43}$$

$$.92 \leq 1 \qquad \text{OK} \qquad \text{Eqn. 3-44}$$

As predicted, the moment term, .58, now contributes to .63 of the controlling factor. These dimensions are quite safe. Another 4" reduction in the depth and the limit would be surpassed. The additional margin of safety represented here, more than compensates for the minimal errors in the forming of the parabolic arches.

With the cross section determined, the area of the reinforcing steel can be calculated:

$$A_{st} = .03A_c = .03(18)(76) = 41 \text{ s.i.} \qquad \text{Eqn. 3-45}$$

Seven #16 reinforcing bars (2" diameter) set in the top layer of the arch and seven #16 bars set in the bottom layer will more than supply the necessary area.

Because the moment decreases to zero near the supports, the depth of the arch can be reduced accordingly. But, the arch must maintain sufficient cross sectional area to withstand the maximum axial load at the buttresses (Fig. 3-8):

$$A_c + 8A_{st} = P/F_c \qquad \text{Eqn. 3-46}$$

$$A_c + 8(44) = 960.3/1.33 \qquad \text{Eqn. 3-47}$$

$$A_c = 370 \text{ s.i.} \qquad \text{Eqn. 3-48}$$

If the width, b = 18", then the arch member can be reduced to a depth, d = 22", at the buttress.

The shell interconnecting the arch can be dimensioned in the following manner. Since the thinness of the shell makes it susceptible to damage, the allowable stress of concrete, F_c, of the shell itself is set at 1/3rd of the allowable stress used for the arch:

$$F_c = \frac{1}{3}(1.33 \text{ k.s.i.}) = .44 \text{ k.s.i.} \qquad \text{Eqn. 3-49}$$

The maximum stress the shell will experience will be at the bottom edge. Inspecting a one foot wide strip from the apex to the bottom edge will provide the information necessary to calculate the potential maximum force at the bottom edge. Eqn. 2-11, $Hy = M_x$, when manipulated gives the horizontal thrust, H:

$$H = M_x/y \qquad \text{Eqn. 3-50}$$

If the maximum moment and the maximum height of the arch are plugged in as values for M_x and y, Eqn. 3-50 can be rewritten:

$$H = pL^2/8h \qquad \text{Eqn. 3-51}$$

where: p = dead and live load per horizontal linear foot of the strip

L = span of the strip

h = maximum height of the strip

Remember, Eqn. 1-4, states: $R_o = L^2/8h$. Substituting R_o in Eqn. 3-51 above results in:

$$H = pR_o \qquad \text{Eqn. 3-52}$$

The force maximum in the one foot strip is at the bottom edge

where the angle of the shell with the horizontal is approximately 45°. Therefore the force, T_1, at this point is found by Eqn. 1-10 shown below:

$$T_1 = H/\cos\alpha = H/\cos 45° = pR_o/\cos 45° = 1.4pR_o \qquad \text{Eqn. 3-53}$$

and: $$F_c = T_1/A_{xs} = 1.4pR_o/A_{xs} \qquad \text{Eqn. 3-54}$$

where: A_{xs} = area of the cross section of the one foot strip of shell

Since F_c = .44 k.s.i. for the shell, and, A_{xs} = 12" x t (where t = thickness of shell), Eqn. 3-54 becomes:

$$.44 = 1.4pR_o/12t \qquad \text{Eqn. 3-55}$$

$$t/R_o = .27p \qquad \text{Eqn. 3-56}$$

The ratio expressed in Eqn. 3-56 is appropriate for any parabolic barrel vault. In this example, where the dead and live load equals 150 lbs./ft. (.15 kips/ft.) of the one foot wide strip:

$$t/R_o = .27(.15) = .04 \qquad \text{Eqn. 3-57}$$

and: $$R_o = L^2/8h = (260)^2/8(52.5) = 161' \qquad \text{Eqn. 3-58}$$

therefore: $$t = 6.5" \qquad \text{Eqn. 3-59}$$

Of course, if the stiffening ribs are any closer than the 30 feet used in the example then the thickness of the shell can be reduced.

Where the shell ends 15 feet above the ground, the edge will have to be thickened into a beam to transfer the load forces to the arch members. The depth of the beam should equal half of its span:

$$d = \text{span}/2 = 30/2 = 15' \qquad \text{Eqn. 3-60}$$

Reinforcing bars appropriate for the loads and the resulting moments are a necessary part of the strength of these beams. The final arch and shell sections, based on these design decisions, are shown below (Fig. 3-14).

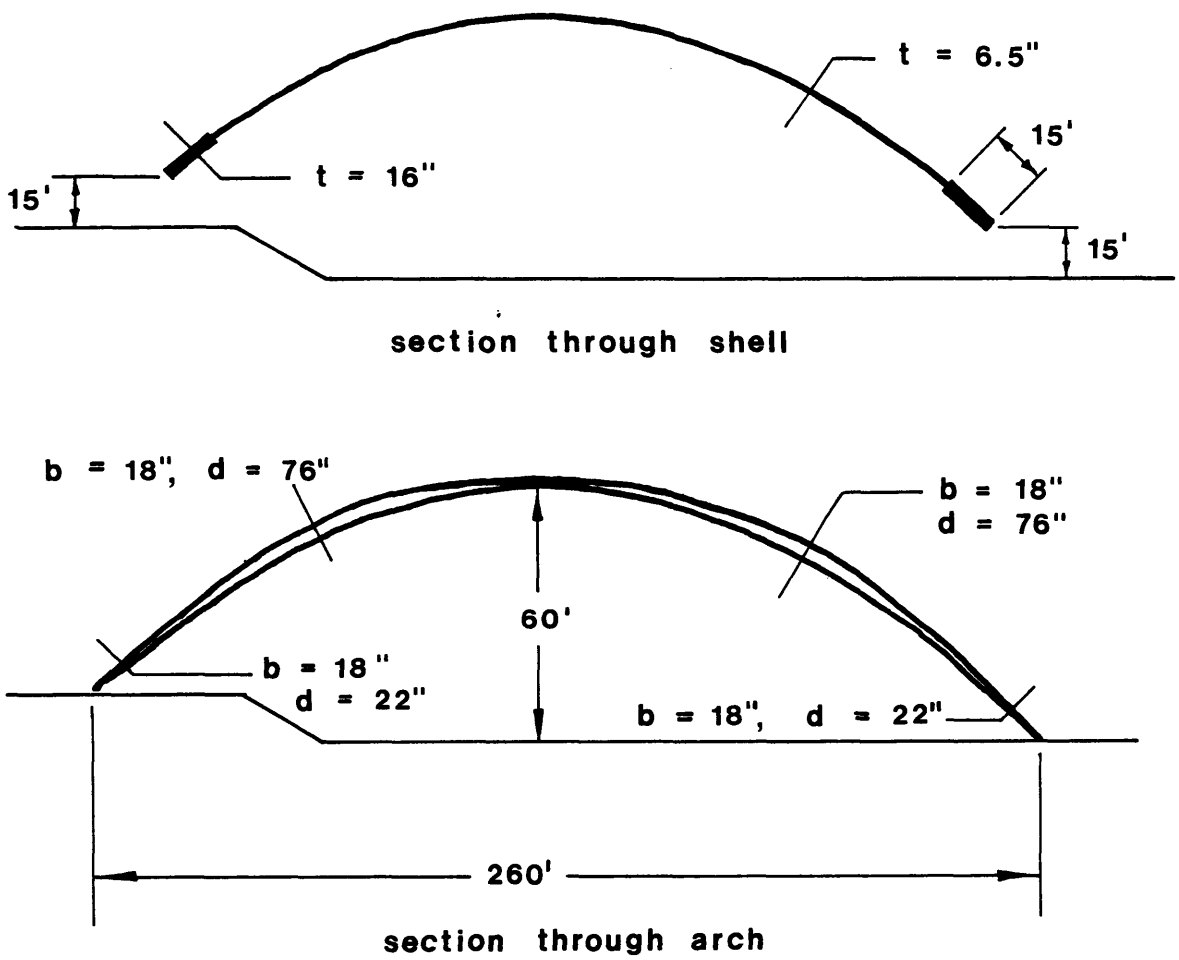

Fig. 3-14 Shell and arch sections with dimensions.

With this brief glimpse at the mathematical definitions of several curves and the resulting structural logic behind the various loadings associated with each curve, a better understanding of the architectural merit of their applications is available. In the next chapter I will investigate several kinds of vaults. I will focus on smaller spans, within the ten to forty foot range. These dimensions encompass the range where the cost of building the formwork often precludes the curved ceiling as a possibility. The exploration will attempt to pan out the more economic solutions of the methods which exist. The emphasis on vaults grows from an acceptance of the inherent beauty of vaulted spaces. The methods of construction must lend themselves to exposing the underside of the vault to view with the potential of employing the structural strength of the arch form to support a floor or roof above. Consideration of the rectangular floor plan and its effect on the shape of the vault will largely influence this search. It is from this conventional and spatially efficient container that many of these vaults spring.

IV. Vaulted Ceilings

In this section I will investigate the constraints that program, in the spatial sense, and construction methods place on the forms with which one chooses to design. I will introduce the study with a reflection on the philosophy of aesthetics and what psychological reasons it suggests for the selection of particular forms. I will then probe the viability of several kinds of curves in vaulting used to span various rectilinear room plans. I focus on the rectangular plan for numerous reasons. First, it is the most common geometry used in room design. Second, the efficiency of the rectangle as a space giving container has been well proven. It is easily joined to other similar shapes and provides maximum functional performance where a high density of building units is common as in urban environments. Windows and doors are simply placed in the planar walls of a rectilinear volume and right angle corners are economical to build. The construction industry and interior furnishings manufacturers are geared for this kind of living container. Thirdly, combining nonrectilinear spanning ceilings and roofs to rectangular rooms presents a significant challenge to the imagination and one's physical resources.

Today, primary reasons for designing vaulted ceilings where the spans are less than 40 feet are aesthetic. This is true because over this distance modern post and beam framing is the cheapest solution. In past history what have been some of the intellectual reasons for building with or without vaulted ceilings?

The Romans had their aesthetic and structural reasons for consistently building with a semicircular arch. As already mentioned, structurally the semicircle was quite successful within the application of the aqueduct, where the loading was fairly appropriate. This fact, along with the ease of cutting voussoirs each with the same taper, influenced its usage for other constructions. Aesthetically, the circle represents harmony and unity of form. With a semicircular arch the line of the curve flows smoothly into the vertical line of the supporting column or pier.

In the Medieval Age when stone was the medium for building churches, the vault was the only structural form which could conceivably support stone over spans up to 40 feet. There certainly were religious overtones in the choice of the lancet arch for Gothic churches. But, the pointed crown may have also had structural justification. A lancet arch is a logical form to support a large load at the crown, such as that of a surmounting wooden truss used to hold up the roof (Fig. 4-1).

There existed more primitive reasons both before and after Christ as to why man has chosen to shelter himself under vaulted forms. Man for thousands of years was a troglodyte. Psychologically, modern

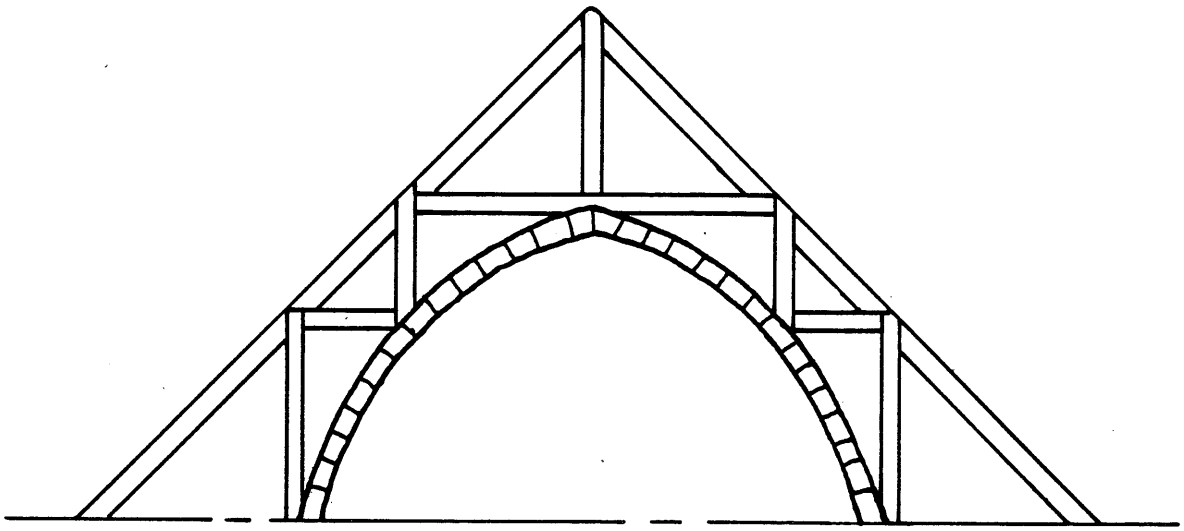

Fig. 4-1 Masonry lancet arch supporting wooden roof truss in Gothic church.

man still is a troglodyte. The caves of today are simply dusted a bit more often than in times past. Man's mind holds court in a cave . . . the human skull. It seems quite natural that we would feel at home in an environment which is physically reflective of our mind space.

There are several Olmec sarcophagi in the Museum Parque La Venta in Villa Hermosa, Mexico which capture the poise of body and mind which the cave gave man in this epoch (800 - 400 B. C.). The sarcophagus illustrated below is a striking representation of the inter-workings of man and his world (Fig. 4-2).

The noble lord picture in Fig. 4-2 sits alert, yet restful in a cave hollowed out of a massive chunk of basalt rock, his world.

Fig. 4-2 Olmec sarcophagus from La Venta, Mexico, 800 - 400 B. C. (now resting in Parque La Venta, Villa Hermosa, Mexico).

He supports the world with its surmounting slab to the same degree that it sustains and protects his presence. The above slab carries the incised lines of a jaguar's face suggestive of the underworld or world of the unknown. For the Olmecs, the jaguar held mythical qualities. Mutants born into their society were believed to be the product of a union between a woman and a jaguar, and were elevated to the status of priests. The rock dwarfs the man. And yet, he grasps a thick rope which encompasses the entire rock showing his

control over his environment. His right hand clasps the rope while his left hand grips his own ankle suggesting the connectedness of his being to his world. The work is a masterpiece of character portrayal. The engagement of the cave is what makes it sing. The little hollow denies the solidity of the rock allowing the noble a protective place within while still maintaining his controlling presence without. A primitive form albeit a sophisticated image.

The Mimbre Indians of the Southwest (region of present-day eastern Arizona and western New Mexico, 300 - 700 A. D.) closely associated the curved forms of their pottery as representations of their mind and soul spirit. They are well known for piercing the center of a dead man's pots and placing these along with the dead man in his grave. The ritual act was supposed to aid the soul's passing from the body.

The Greeks and the Maya both knew about curved forms for both civilizations used curves in plan, but preferred other forms for the elevations and vertical sections of their temples. The Greeks employed a post and beam arrangement which greatly limited the spacing of columns. Witness, the Parthenon. The Maya built a circular (in plan) observatory at Chichén Itzá Viejo (classic period, 300 - 900 A. D.), but the vertical sections of their temples were almost always constructed in a truncated A-shaped stone arch (Fig. 4-3 and Fig. 4-4).

The subject of the Maya (700 B. C. - 1400 A. D.) is a fascinating one for it embraces the whole dialectic of aesthetic of form versus

structural logic. Here was a people who had a fully developed written language, an understanding of the stars, an accurate calender, and a sophistication in the science of building that is uncontested. They could have selected nearly any form they desired, structurally or unstructurally sound, and figured out a way to build it. Turns out, they chose an A-structural form, one that has some structural logic, although not a real winner given the fact that they built almost entirely in stone.

The span of the A-formed arches was usually very small, generally less than 10 feet. The shape was not excessively strong considering the large distributed loading it was placed under and given that the pressure line for the load is something akin to a parabola. Many historians have stated that the Maya were not aware of the potential of the voussoir arch. This author is of the opinion that the Maya knew of curved arches, but that the nature of their spiritual allegiance led them to build the A-shaped arch. In fact, I have found in the ruins of Chichén Itzá Viejo ("Old Chichén," classic period, 300 - 900 A. D., before Toltec influence) a voussoir arch supporting a passageway of a building near to the Observatory. It is unlikely that this was an archaeologist's reconstruction for all of the other reconstructions have been made using variations of the corbel arch. In addition, as mentioned, the Caracol or Observatory was built in the round. Therefore, the Maya were obviously capable of conceptualizing in curved shapes.

Because the Maya's choice for an arch form was not ideal for

Fig. 4-3 Maya stone corbel arch, Palenque, Mexico, classic period 300 - 900 A. D..

the loads they developed techniques of construction, some rather ingenious, to keep them from tumbling down. Many of these arches are of the simple corbel type where each stone slab cantilevers beyond the one below it and is counterbalanced by the load above (Fig. 4-3).

A more finished version and one which was more cleverly engineered is witnessed below in Fig. 4-4. Here the finished stones of the arch are basically isoceles triangles shaped with the long

Fig. 4-4 Modified Maya stone corbel arch, Chichén Itzá Viejo, Mexico, classic period 300 - 900 A. D..

side of the triangle carved concavely. The vertex between the two similar sides of the triangle rests on the stone below with one leg providing the face of the arch while the other is imbedded in the loose rubble fill. The leg which juts into the rubble acts like a lever. As the loose rubble settles its weight presses down on this lever which causes the end of the opposite leg to press up on the stone above. The upward pressure resists the tendency of the flat

face of the arch to collapse inwards. The aesthetic choice of the Maya may have been justified by their religious beliefs, but it certainly presented their masons with a challenging problem. And physically, the choice of a truncated A-form arch severely limited the width of their rooms and passageways.

Throughout history there were many reasons for building vaults and arches, and many of these had no structural rationale. The twentieth century is no different. In the two photos below a structurally efficient vault is juxtaposed to a structurally inefficient arch (Figs. 4-5a and b).

Fig. 4-5a Pension with repetitive barrel vaults for a ceiling, Oaxaca, Mexico, built 1970.

Fig. 4-5b Sewing Factory, Paris, France, by Auguste Perret, completed 1919.

The repetitive barrel vault of a small pension in Oaxaca, Mexico, built in 1970, is employed as a cheap method to span from wall to wall of each room (Fig. 4-5a). It is the appropriate form for the loading and consequently allows the tile and concrete ceiling to be quite thin. In the other example, Perret's sewing factory in Paris, completed 1919, the concrete arches are not the appropriate funicular form for the load (Fig. 4-5b). As a result the arches must absorb

considerable bending force. Who is to say that the expense of both solutions wasn't justified? The pleasure that Perret's curved arches have given the workers of the factory is immeasurable. Perhaps productivity was improved because of this elegant solution.

What would I as a present-day designer put forth as a rationale to justify the use of vaulting in office or residential construction? The principle reason I have is that vaults are less monotonous than flat ceilings. They afford a dynamic change at or above the molding line where the ceiling meets the wall. The chiaroscuro of a curved surface is more subtle than that of a flat surface. There is more gradation of light intensity, a greater diffusion of shadow. Vaulting tends to deliver a hierarchy to the various positions within the enclosed space. Notions of axis, dominance - subdominance, and centrality of space arise in association to vaulted spaces. These along with the structural aspects of vaults are some of the reasons why they have been built so often in churches. I believe there exists a fundamental concept which underlies the above mentioned feelings about vaulted ceilings.

Man is essentially at home in nature. Nature in its wondrous complexity presents us with objects and creatures which exist in innumerable shapes, sizes, and textures. The diversity of subject and form found in the natural world are an inspiration and delight to mankind. There is balance in this diversity. Curves are plentiful in nature. Imagine a tree-lined street in your home town where the arching branches form a bower overhead. Curves are much less

apparent in the modern urban built world of glass, steel and concrete. Not only is there a loss of physical touch with the earth and its fruit in these environments, but there is also a loss of intellectual stimulation by the lack of many of the common earth forms. If one were to introduce more curves into the ubiquitous Miesian cubicles which abound in today's designs and yesterday's buildings . . . where to logically place them?

Warping the floor might provide good exercise, but would be unfair to octogenarians. And if the warp presented a convex ceiling to the inhabitants below the result could be untenable on psychological grounds. Nature does have its share of unpleasant curves. Curving the walls in plan or section might be nice. It also might be quite impractical spatially for the user, the surrounding rooms, and the interior furnishings. Arched windows and doorways and curved relief work in planar walls is a different issue. Finally, voilà the ceiling. The presence of the ceiling is mostly a visual one. Rarely do we touch the ceiling or bump up against it. What better place for a nonlinear surface?

It is possible to construct vaulted ceilings without raising the ceiling height. The residual spaces between vault and floor can be used to house mechanical equipment. There is a definite practical potential which goes hand in hand with these less than flamboyant forms. Two questions will shape the remaining discussion:

1) Volumetrically, for the rectangular room, what are some of the vault configurations available to the designer?

2) Given the difficulty of building certain forms, what vaults are best built as false ceilings and which can logistically take on the structural role of supporting themselves as well as a surmounting floor or roof?

A look at smooth volumetric contours will open up this survey. Later, ribbed vaulting and its variations will be introduced. The simplest of vaults is probably the barrel vault with single curvature. In one direction the section is curved while in the perpendicular direction the section is rectilinear (Fig. 4-6). The barrel vault can have any kind of curvature as long as the chosen curvature is uniform for the length of the room.

Barrel vaults can work as beams to span from wall to wall or column to column. They have the ability to act like a beam when spanning along the length of the barrel vault. If a single barrel vault is employed to span a room a diaphragm or tie member is necessary to restrain the horizontal thrust of the cross-span arch of the vault. If barrel vaults are set side by side the horizontal thrust of a vault can be counterbalanced by that of an adjacent vault (Fig. 4-7). Of course at the end bay a buttress or tie member through to the opposite side is necessary to restrain the thrust.

If two similar barrel vaults intersect at perpendiculars at the same altitude we have the vault geometry that is shown in Fig. 4-8. The illustration depicts the vault set over a square room plan. Extrapolating this geometry to a rectangular room plan produces the image presented in Fig. 4-9. Any one of these curved surfaces can be inclined with regards to the horizontal to arrive at variations

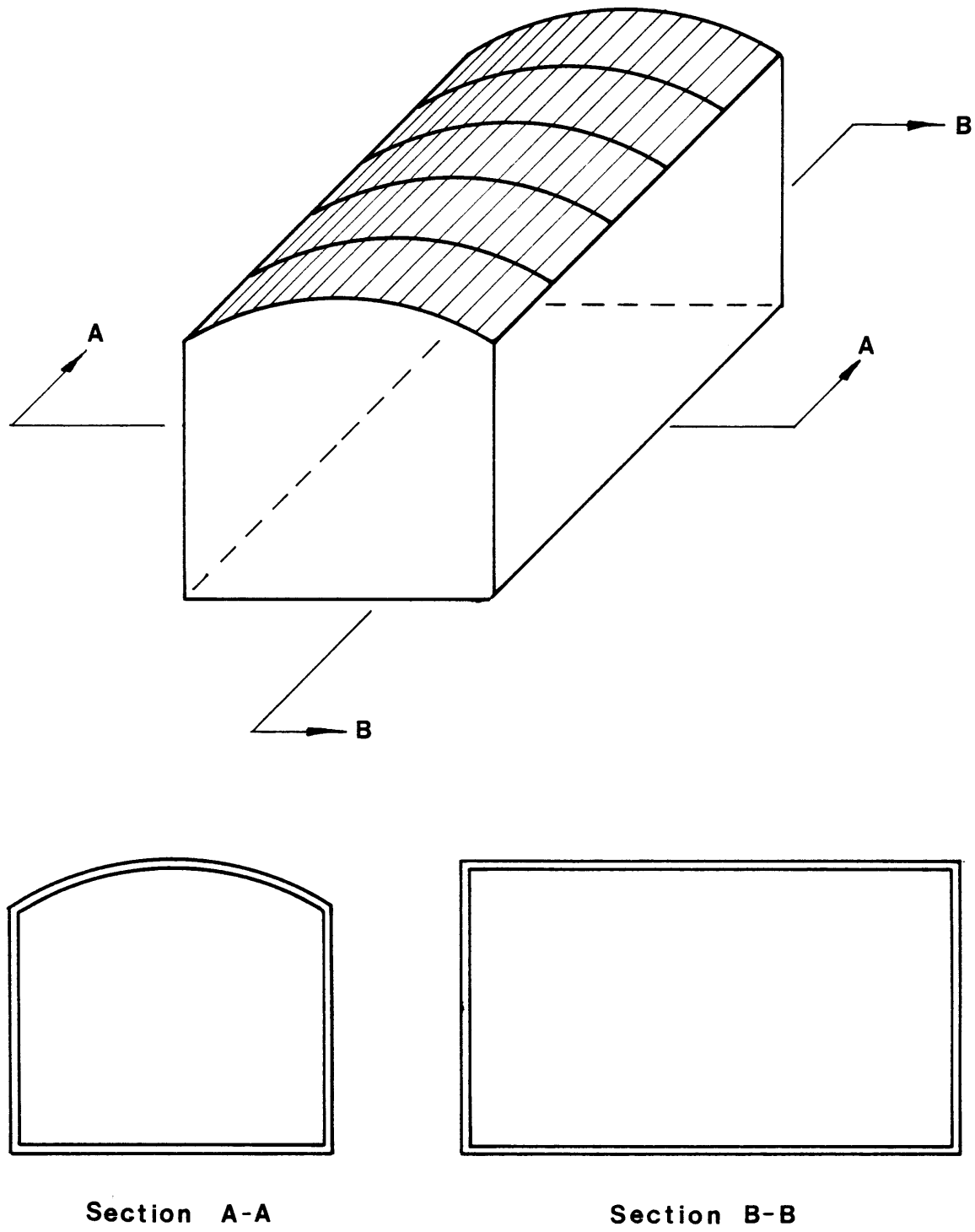

Fig. 4-6 Axonometric and sections of a barrel vault set over a rectangular room plan.

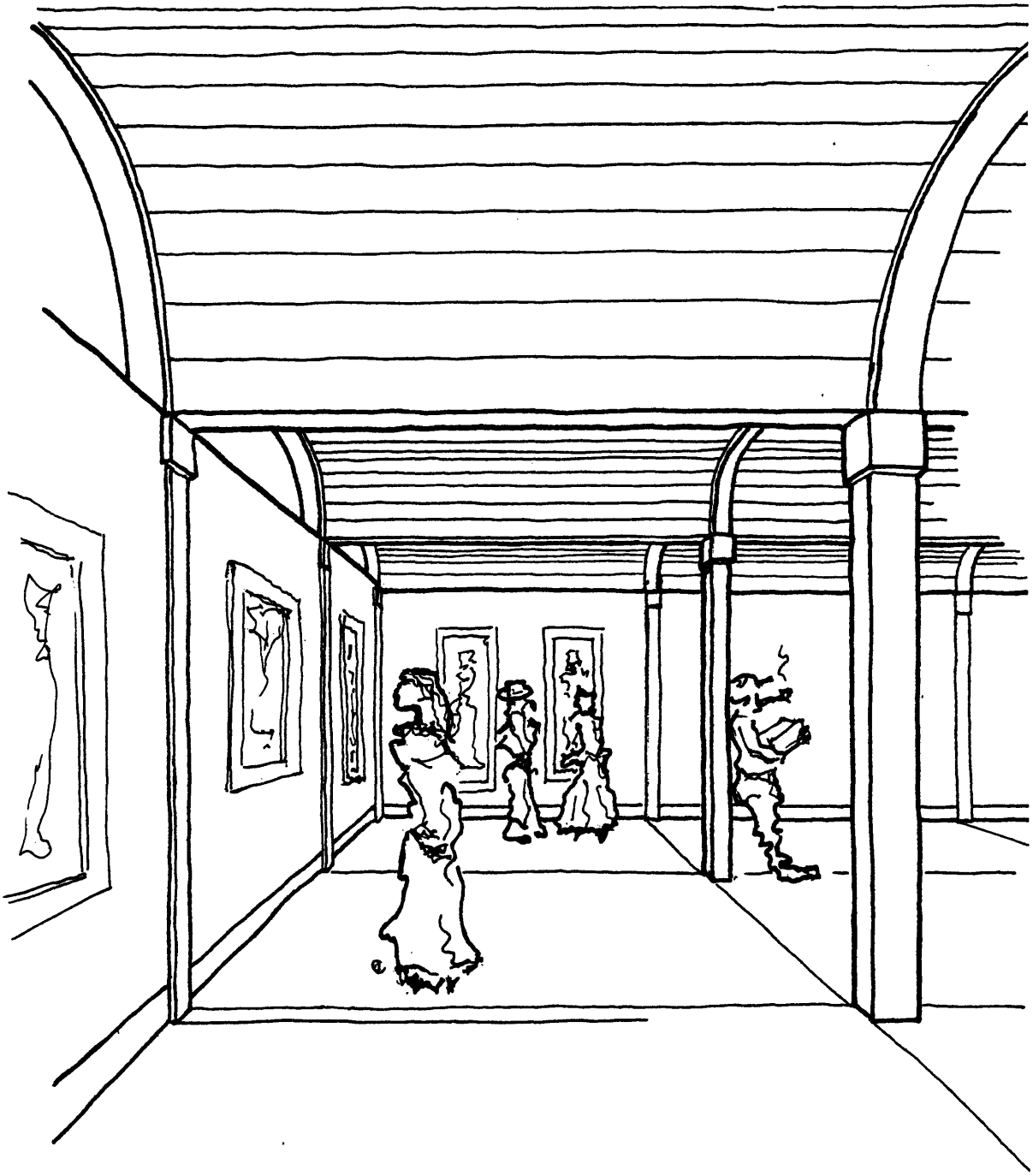

Fig. 4-7 Barrel vaults used as spanning elements like beams. Repeating the vault side by side enables the horizontal thrust of a vault to be counterbalanced by its neighbor.

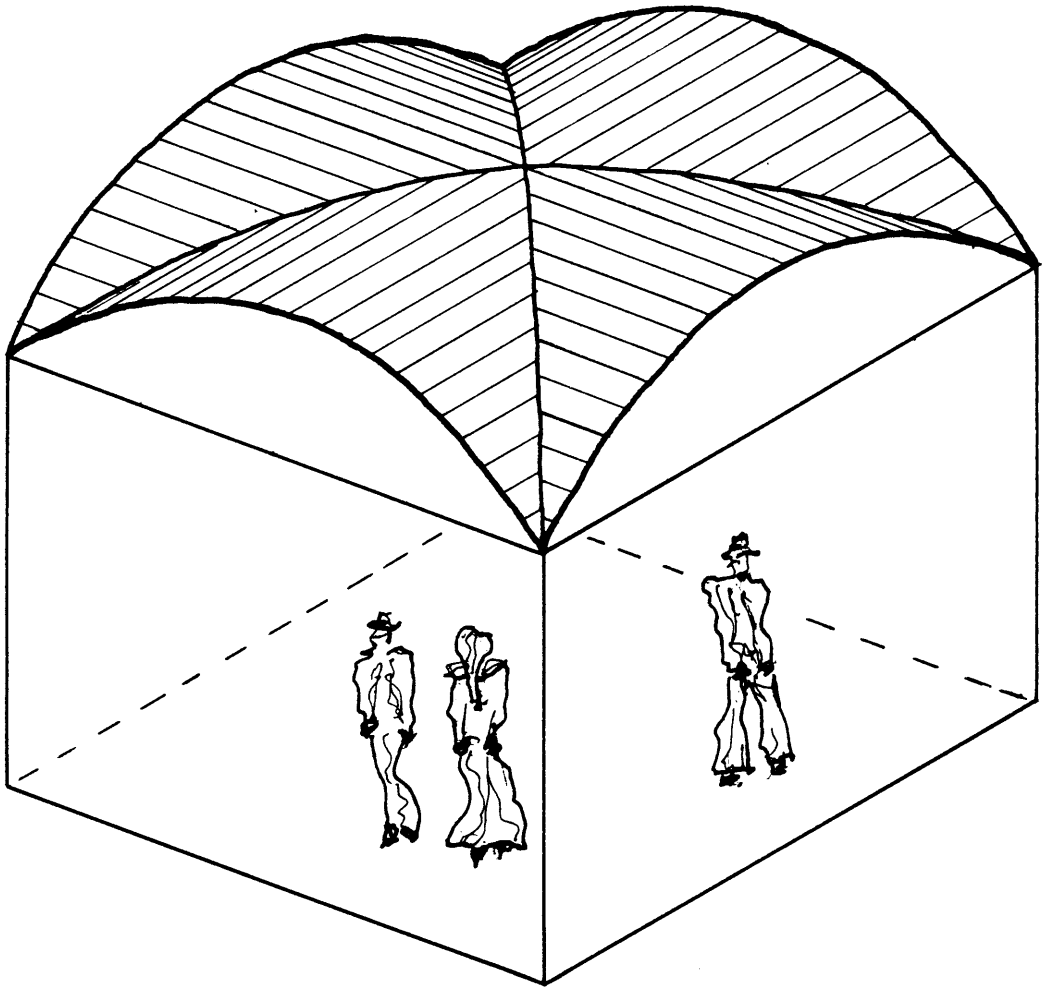

Fig. 4-8 Two barrel vaults set perpendicular to each other intersecting at the same altitude.

to the configurations shown in Fig. 4-8 and Fig. 4-9.

If the curved surfaces which intersect are not sections of barrels but sections of saddles (negative total curvature - doubly curved in opposite directions) the vault attains the character of

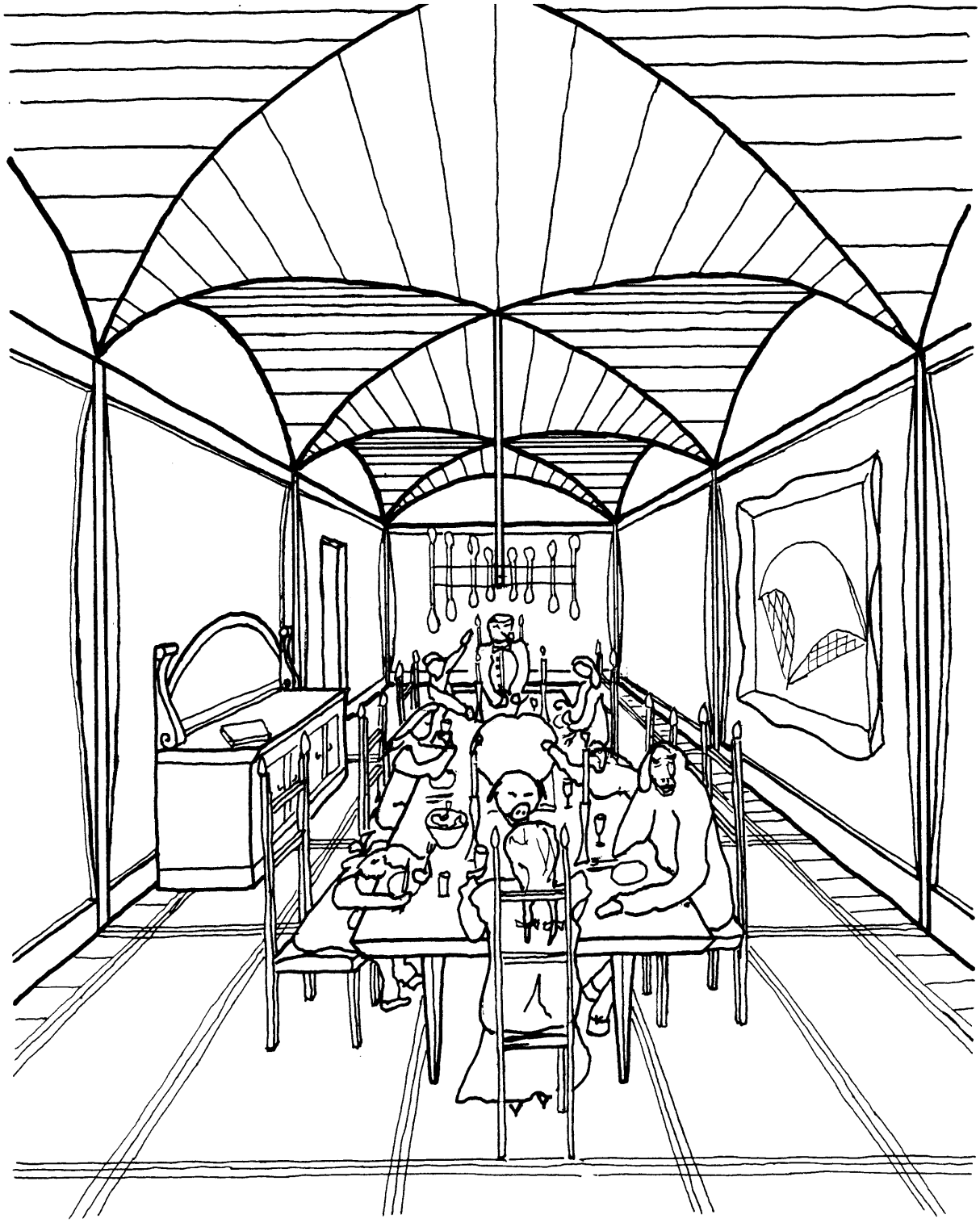

Fig. 4-9 Variation of the vault geometry depicted in Fig. 4-8, here designed to surmount a rectangular room plan.

the outline drawing reproduced in Fig. 4-10. The figure is actually two hyperbolic paraboloids which intersect at ridges which diagonally connect the four corners. An interior perspective displaying this geometry as a vaulted ceiling over a dance studio is portrayed in Fig. 4-11. Because of the double curvature the last illustration is a more difficult one to build than the previous examples.

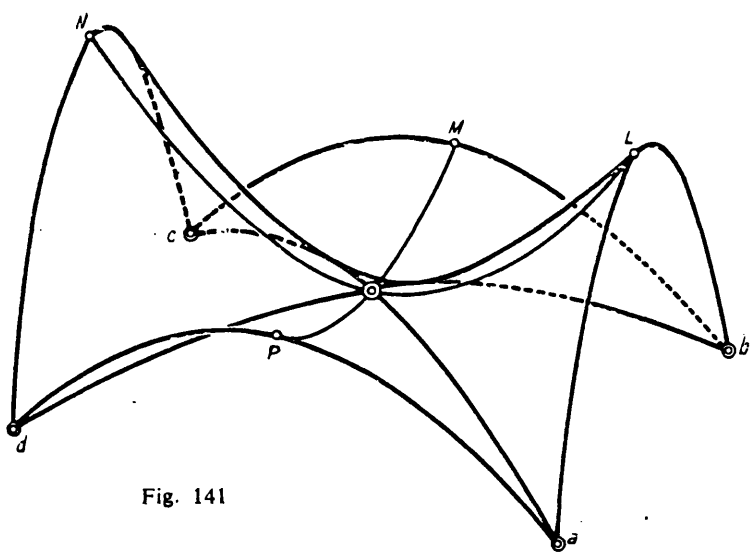

Fig. 141

Fig. 4-10 Two hyperbolic paraboloids intersecting at ridges which diagonally connect the four corners.

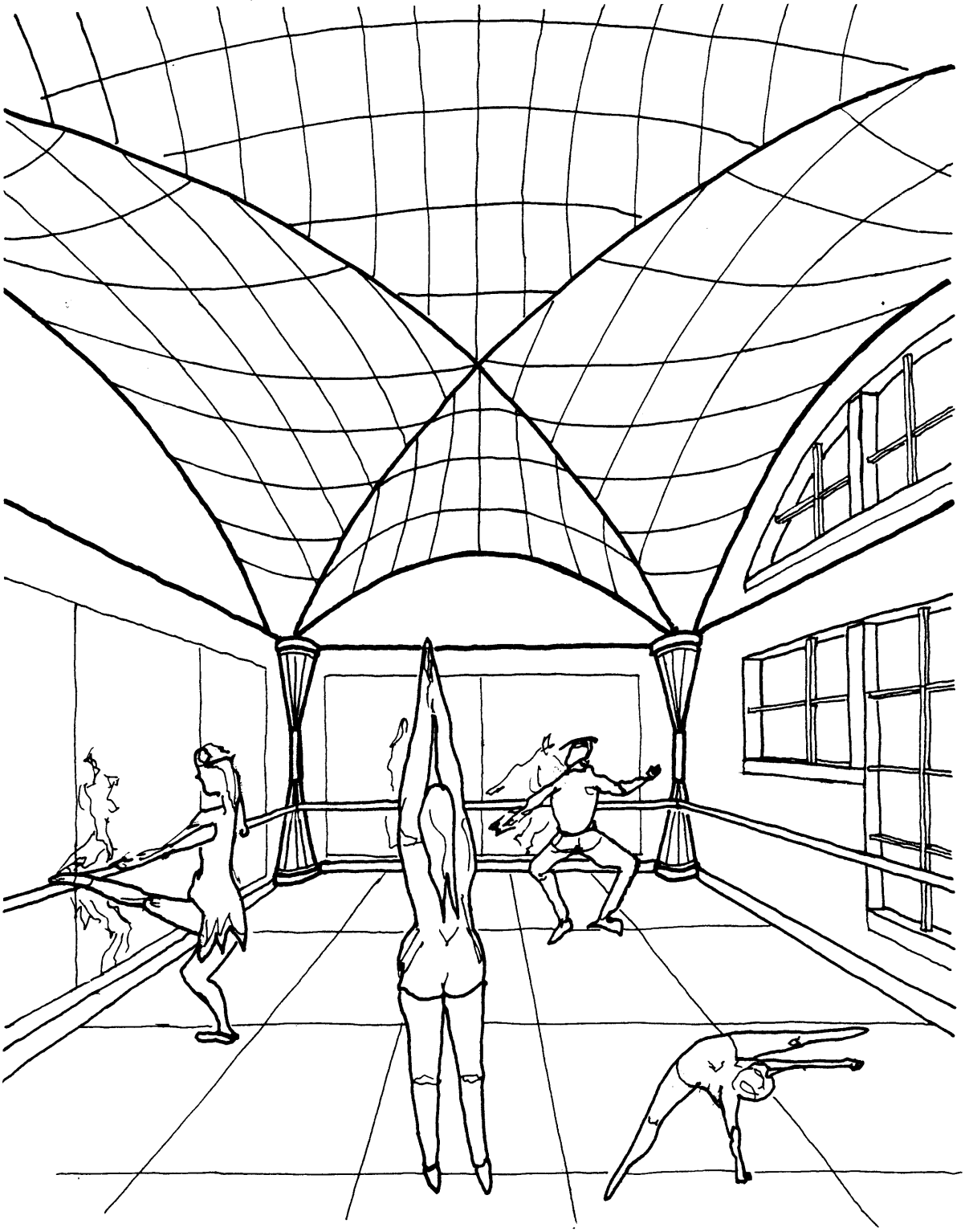

Fig. 4-11 Interior perspective illustrated with the vault geometry depicted schematically in Fig. 4-10.

A simpler doubly curved surface with negative total curvature is the conoid. Professor Waclaw Zalewski defines the conoid with the following words and illustration (Fig. 4-12):

> A conoid results when a straight line glides along two guiding lines one of which is curved and the other straight. Conoids belong to the family of membranes with a negative total curvature, which can be detected by observing the intersection of the conoid surface with a slanted plane.[4]

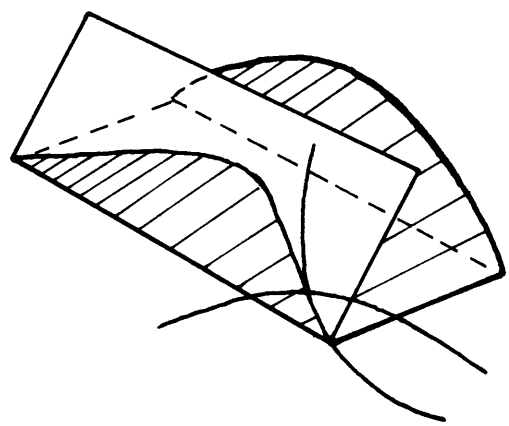

Fig. 4-12 Conoid intersected by a slanted plane to show negative total curvature.

The conoid vault, designed for use in an office organization, is displayed in Fig. 4-13. The height of the vault can be adjusted to conform to program restrictions while still allowing sufficient

---

[4] Zalewski, Waclaw P. Membranes and Shells p. 37

dimension to the residual space so that it can house portions of the mechanical system.

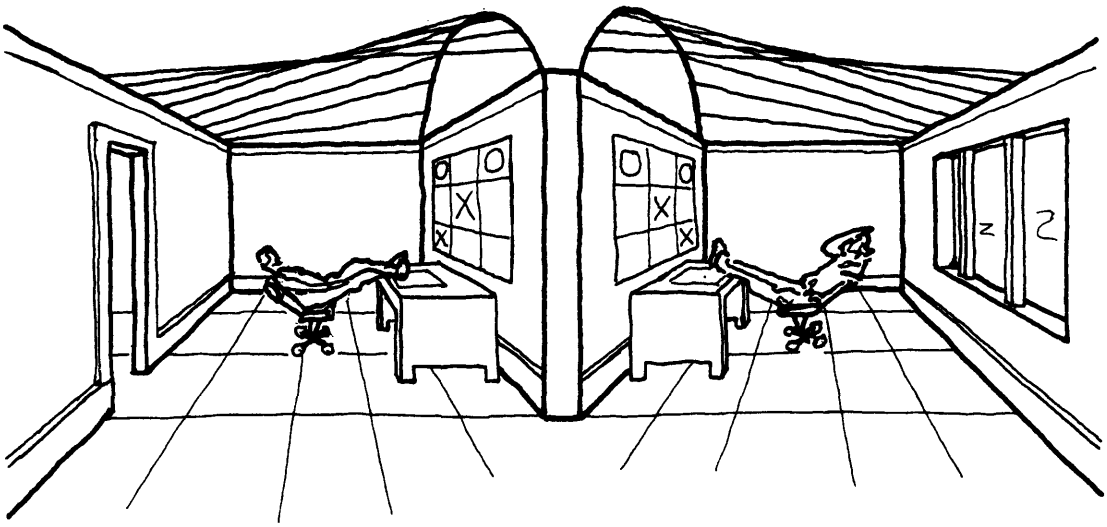

Fig 4-13 Office organization surmounted by conoidal vaults.

Another possibility for a rectangular room is the hyperbolic paraboloid (hypar), either one or combinations of more than one. A ceiling/roof made from four hypars is drawn below in Fig. 4-14.

Next is a vault which has positive double curvature where both perpendicular sections have curvature in the same direction. One can conceptualize a variation of this form by imagining a thin rubber membrane stretched over a rectangular frame and inflated. Many tennis courts with inflated membrane roofs have this configuration. If the curvature in both directions is noncircular, the

solid diagonal lines = principle lines of compression

dotted diagonal lines = principle lines of tension

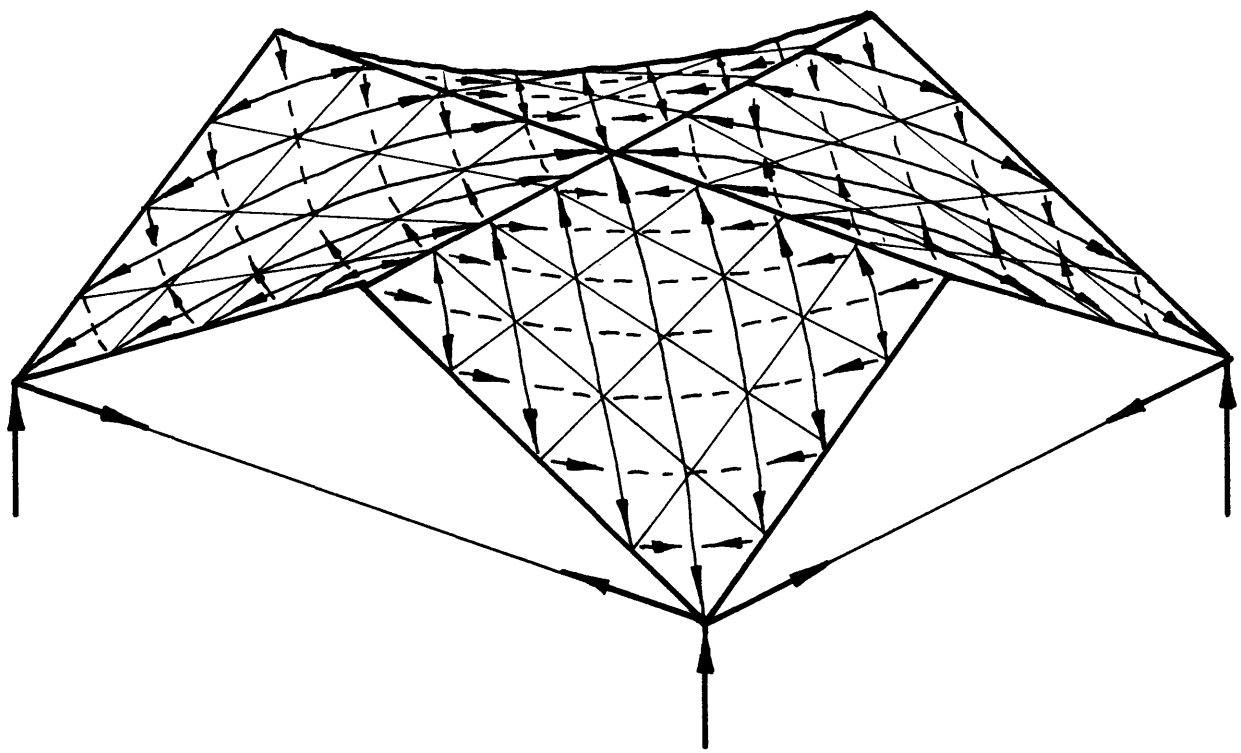

Fig. 4-14 Ceiling/roof made from four identical hypars set against one another. All edges between the hypars as well as the outer edges are in compression.

curves of either direction will have changing curvature as the sections are cut from the middle of the volume toward either edge (Fig. 4-15).

As depicted in Fig. 4-15, the curvature of the middle sections

ourvature of section $K_o > K_1$

$K_2 > K_3$

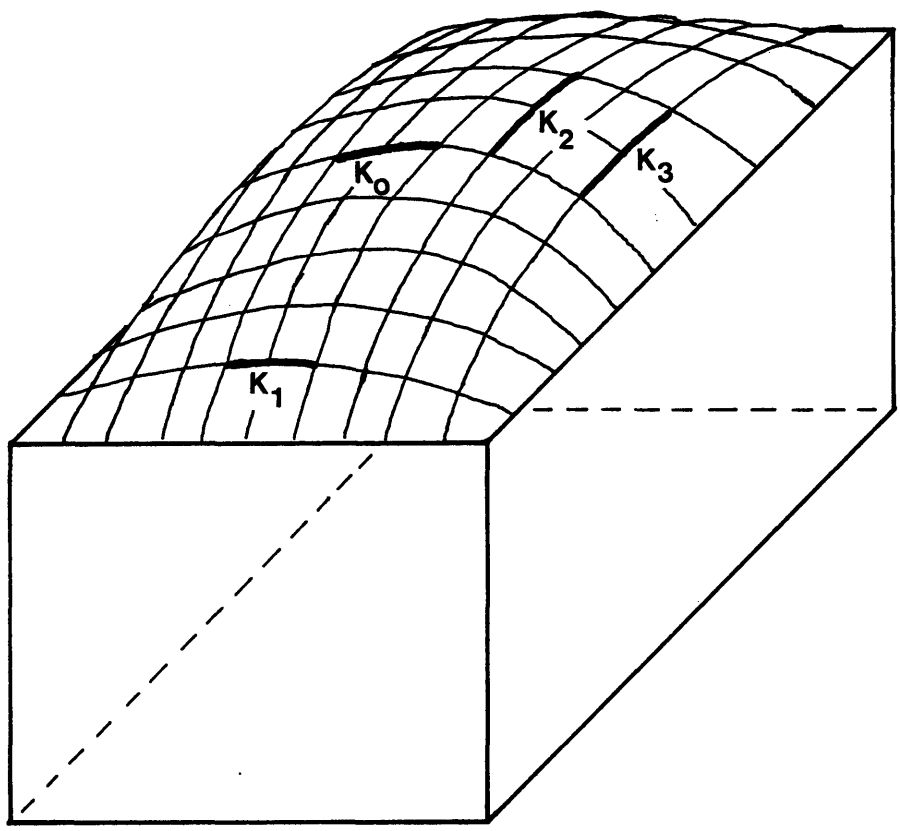

Fig. 4-15 Vault with positive total curvature surmounting a rectangular room. Curvature in either direction is noncircular (perhaps of a parabola or a catenary). Greatest curvature lies with sections K_o amd K_2 in the middle of either side. Least curvature lies with sections K_1 and K_3 toward the ends of either side.

is greater than that of the sections toward the ends of either side. In other words, the radius of curvature, R_i ($R_i = 1/K_i$), of the

middle sections is smaller than that of the sections toward the end of either side.

A variation of the vault shown in Fig. 4-15 is a vault which has curvature in both directions, but where the curvature is constant across both the width and length of the rectangular plan (Fig. 4-16a and b).

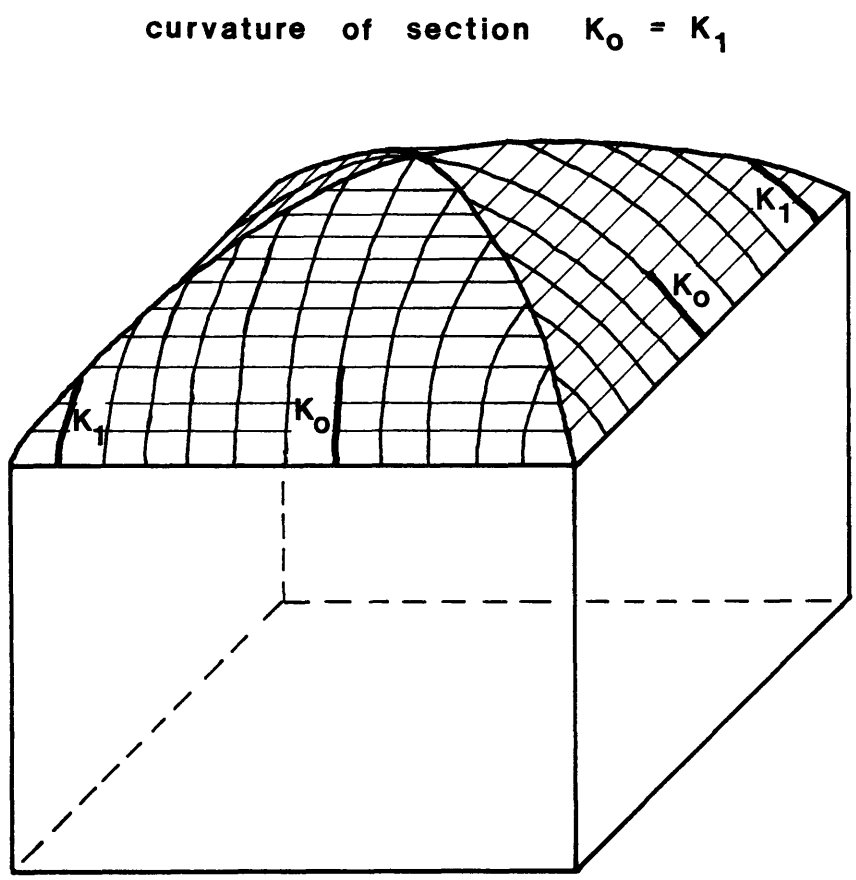

Fig. 4-16a Vault over a square plan in which each direction has constant curvature over its width, $K_o = K_1$. Ridges are a necessary facet of this vault.

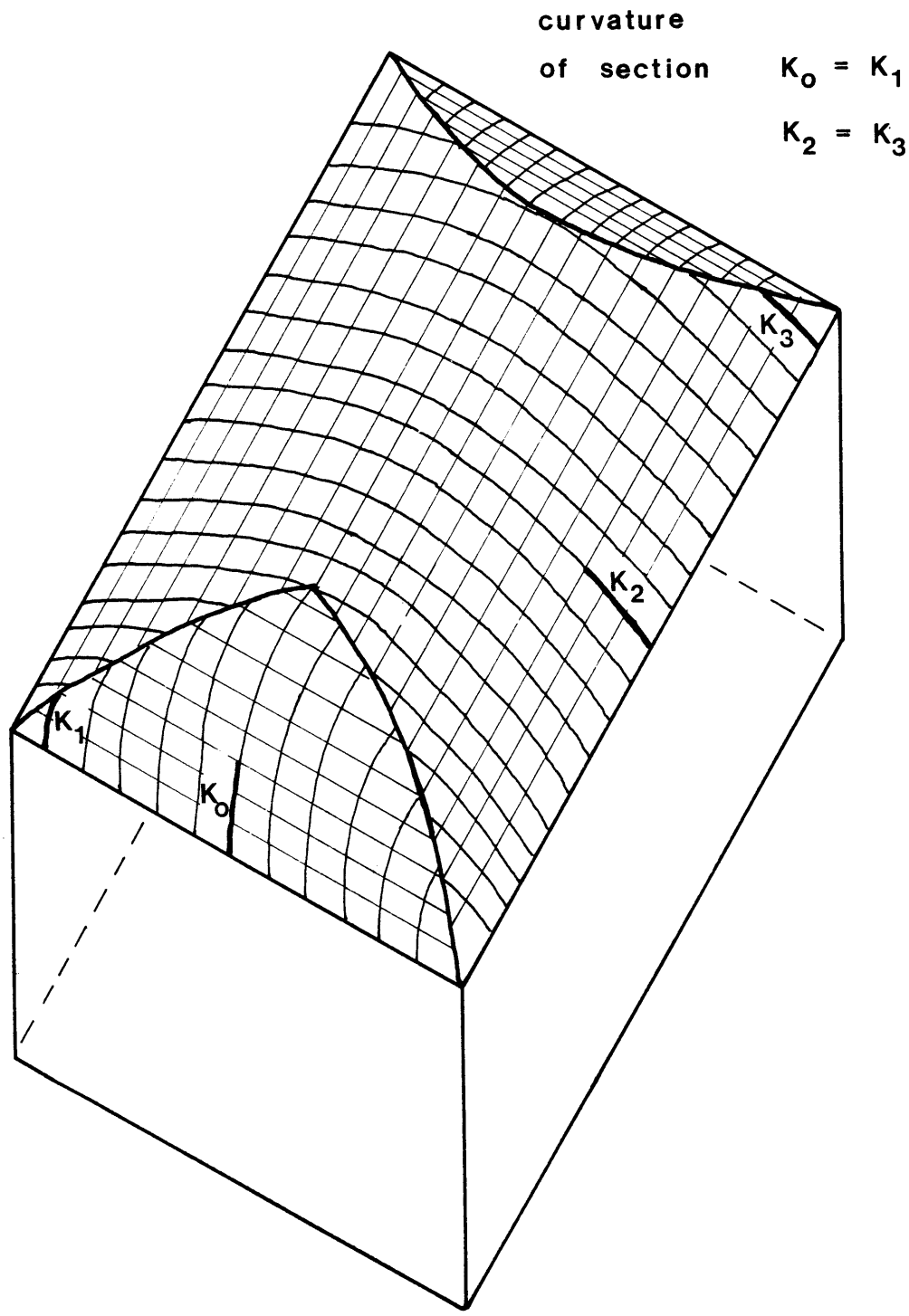

Fig. 4-16b Vault over rectangular plan in which each direction has constant curvature over its width and length, $K_o = K_1$, $K_2 = K_3$.

In both Fig. 4-16a and b ridges form where the two contours intersect. If the vault is to have stiffening ribs these ridges provide logical lines along which to place a set of diagonal ribs. If the room is rectangular the vault takes the form depicted in Fig. 4-16b. Additional ribs can be aligned orthogonally to the room plan at regular intervals inbetween the diagonals. It should be clear that the vaults pictured in Fig. 4-16 are much easier to construct than the vault shown in Fig. 4-15 because of the consistency of the curvature across the width and length of the vaults in Fig. 4-16.

Moving again to more complex vaults it becomes quickly apparent that there exists a great number of possibilities for developing complex vault shapes. I will refer to a few of the more notable remaining geometries in the following illustrations.

A ribbed vault which was employed commonly in Gothic ceiling design is pictured and described below by Walter C. Leedy Jr. in his article, Fan Vaulting (Fig. 4-17):

> Ribbed vault, the classic Gothic ceiling design, was conceived by medieval masons as a frame structure in which pointed arches serve as weight-bearing ribs. Each of the modular units of the vaulting, called a bay, includes six arches arranged as a rectangle with intersecting diagonals. The load of the ceiling is converted into outward and downward thrusts that are conveyed in part through the arches to the piers and walls. The surface of the vault between the arches is filled with stone sheets called webs. In England the stones were laid at an angle of 45 degrees from the longitudinal or transverse ridge to the groin.[5]

---

[5] Leedy Jr. Walter C. Fan Vaulting Scientific American Feb. 1973 p. 136

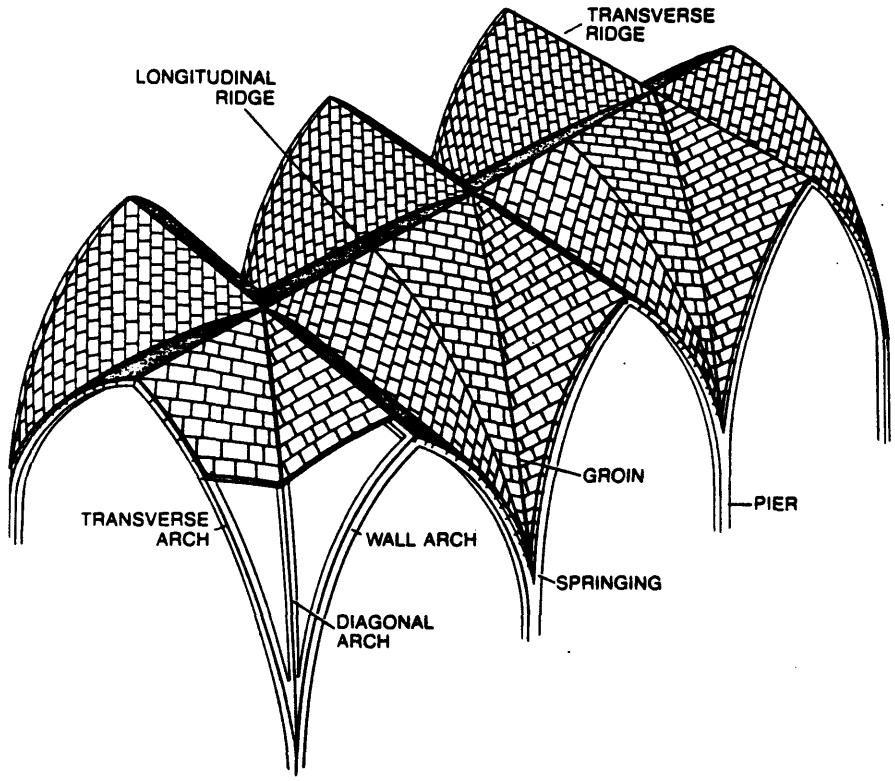

Fig. 4-17 "Ribbed vault, the classic Gothic ceiling design."

One can imagine a room accepting the vaulting that typifies a "bay" in the above example. It would certainly be an intense ceiling structure to have over one's office or living room unless flattened out to a much greater degree than typified in Fig. 4-17.

A more smoothly contoured vault which can be even more fanciful than the Gothic vault is a vault which employs four surfaces of rotation (fan-vault conoids) to a bay or room (Fig. 1). Picture

a curved line which extends between a point and a circle. If the line is rotated about the circle it defines a surface which is doubly curved like a saddle. Within a bay or room the rotated surfaces are set on their pointed ends one to each springing or corner. The void between their lines of intersection is filled by a flat horizontal surface (Fig. 4-18).

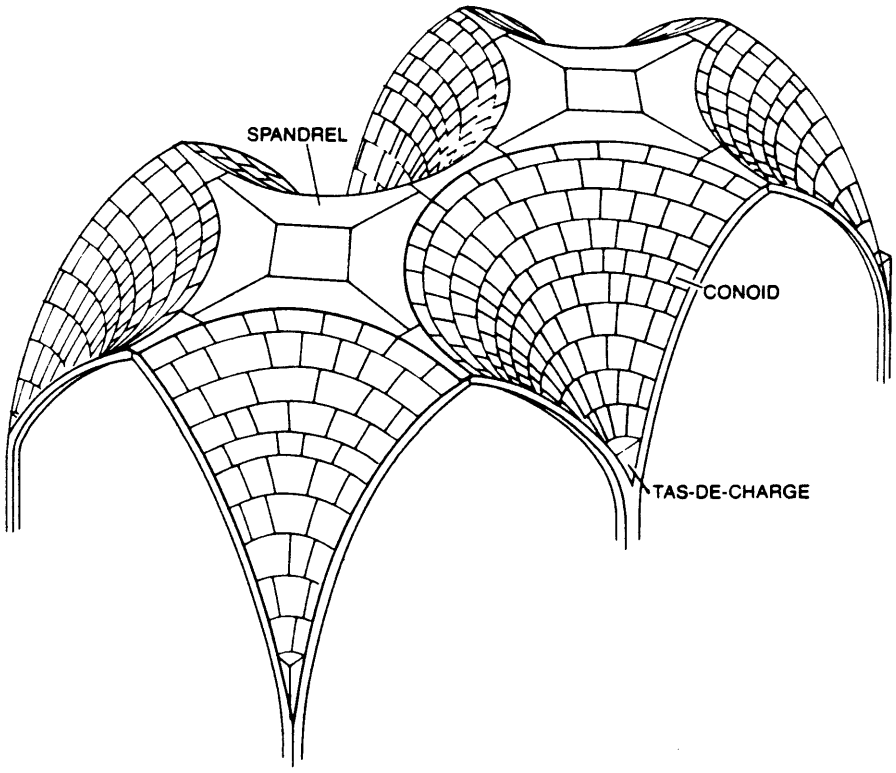

Fig. 4-18 Fan vault created from "fan-vault" conoids.

Finally, there are many types of vaulted ceilings which can be made from linear elements, which when combined form arched surfaces. In the example illustrated in Fig. 4-19, designed by Professor Waclaw Zalewski for industrial application in Poland, the vaulting springs from structural column capitals.

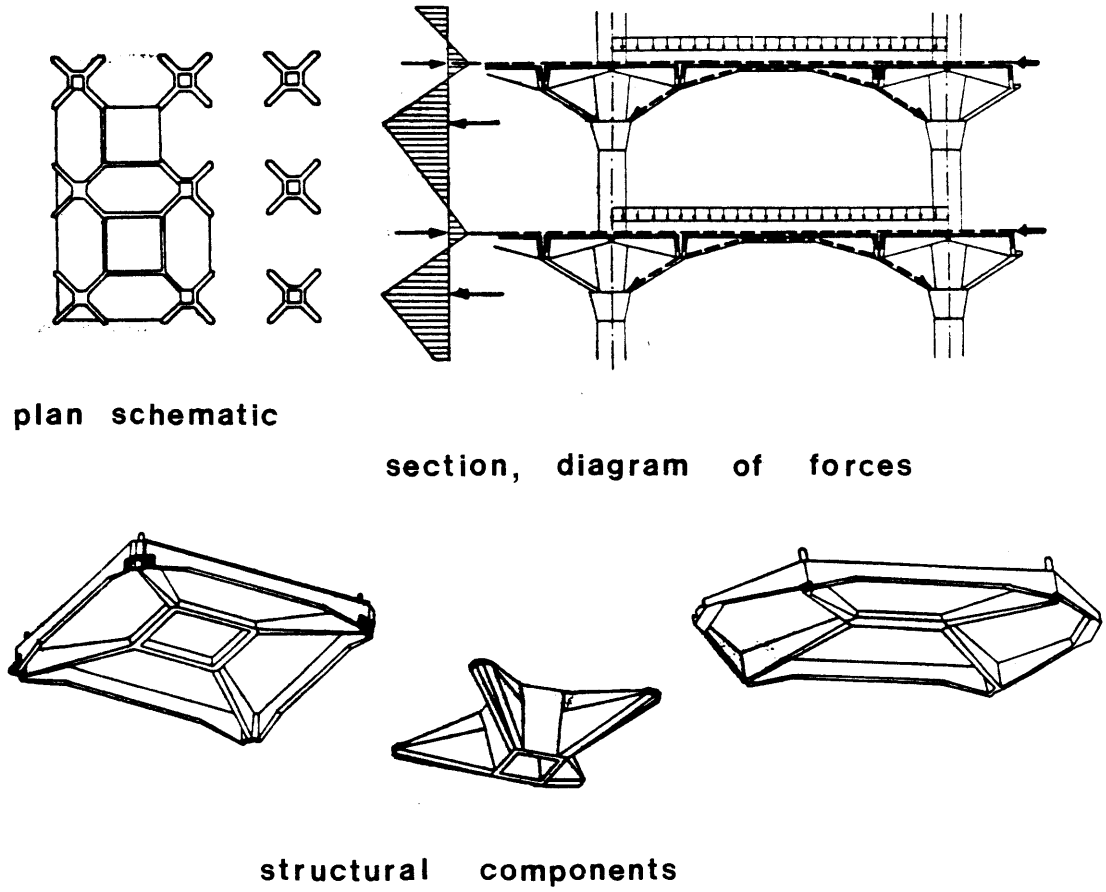

Fig. 4-19a Multi-story project for industrial use, Poland 1958, Waclaw Zalewski, engineer.

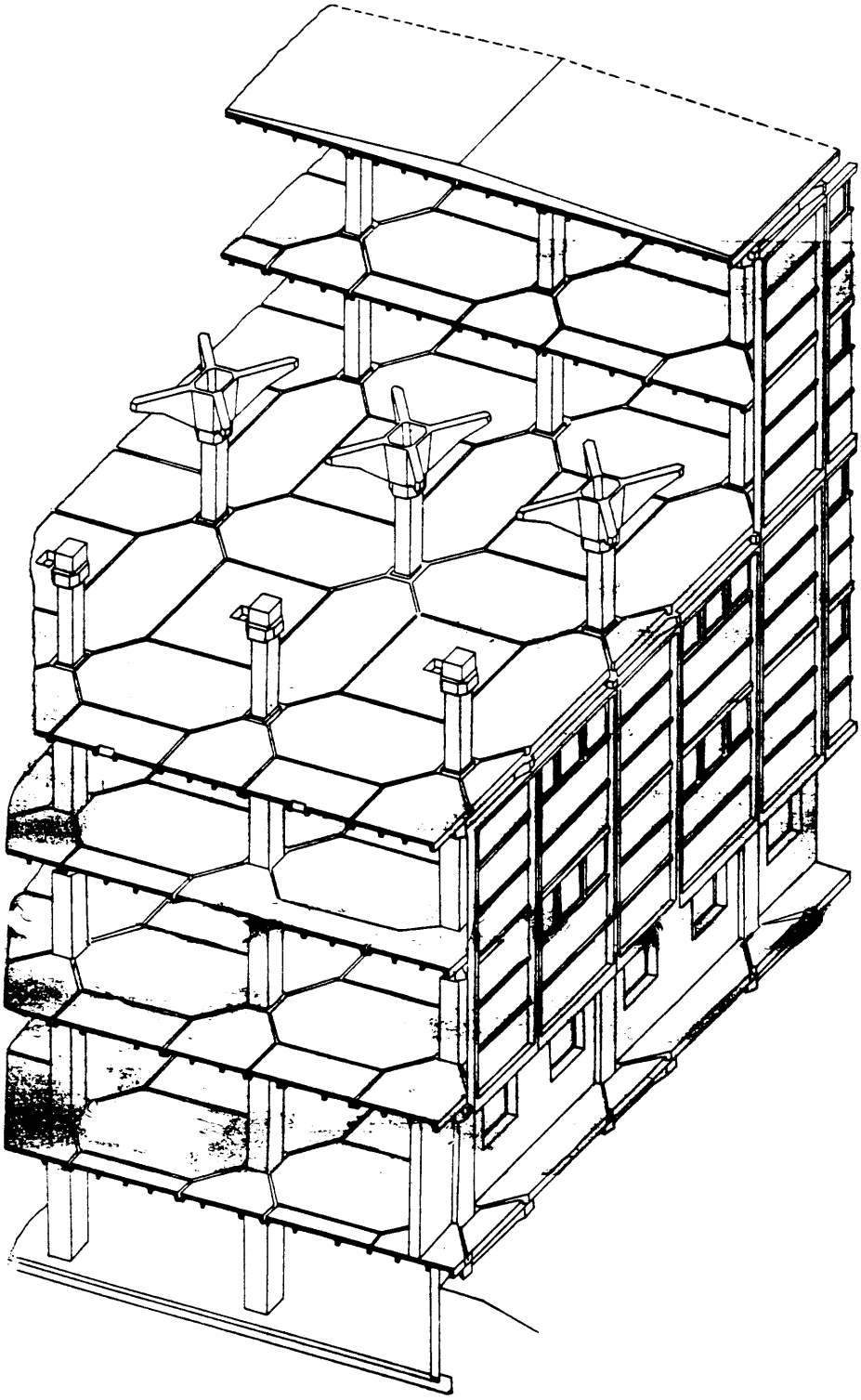

Fig. 4-19b Axonometric of multi-story project for industrial use, Poland 1958, Waclaw Zalewski, engineer.

Each capital has four structural ribs oriented on the diagonal to support ribbed concave panels. The panels are concave when viewed from the underneath. The main span of the diagonal ribs is interrupted by flat horizontal panels set in the middle of a larger arched square panel. The remaining voids between adjacent square panels are filled with hexagonally shaped ribbed panels. All elements are precast. After being set in place the seams between components are grouted to lock the assembly together insuring a continuity of structure. The horizontal thrust of each bay is counterbalanced by the thrust of adjacent bays. To take care of the end bays a tensile tie member can be placed from one side of the building to the opposite side.

Now, how to build these contoured surfaces? And with what materials? To build economically it would be necessary to place a few restrictions on the material and the method. I don't believe one can build inexpensive vaults today in stone, brick, or tile. Their weight would demand considerable buttressing to counteract the horizontal thrusts. But more important perhaps as a construction expense would be the necessity to use falsework while setting the pieces of the vault. The number of man hours required to rig up the falsework and set the pieces of the vault in mortar can be enormous. Concrete too, necessitates falsework. But, concrete has two advantages over stone and brick. First, concrete mortar can be pumped to difficult locations through hoses by a pump truck. It can be sprayed onto surfaces (Gunite) and allowed to set up in thin layers. The early layers once set give structural support to later

layers. Because the first layer can be quite thin and light it is possible that the formwork supporting it could be an inflatable membrane. The membrane can easily be placed for the spraying and removed afterwards. If appropriate precautions are taken the membrane can be reused. The second advantage concrete has over other masonry materials is that it can be precast in readily transportable elements. The benefits this brings to precision forming, on-site assembly, and finish work are suggested by Zalewski's work depicted in Fig. 4-19.

For most applications the masonry materials including concrete are probably the only sensible materials to employ both visually and structurally for vaulted surfaces. Stiffening ribs are a different matter. Here oftentimes steel and wood are justly employed. The advantages and disadvantages of the various alternatives have to be carefully considered. For example, concrete can with one surface provide a vault and a structural support for a ceiling or roof above (Fig. 4-20). Stiffeners are simply cast as one piece with the vault. Of course concrete requires some kind of formwork and many times the easy solution won't suffice Formwork can be reused such as with slip-forms in a barrel vault. But, concrete vaults no matter how thin are heavy and create large reaction forces to counteract at the points of support.

Wood, if it is allowed by the fire code, is relatively light. Reaction forces are minimal when compared to those caused by masonry vaults. Even though the curve of the vault itself may have to be made from a nonstructural laminate, the hidden framework can do much

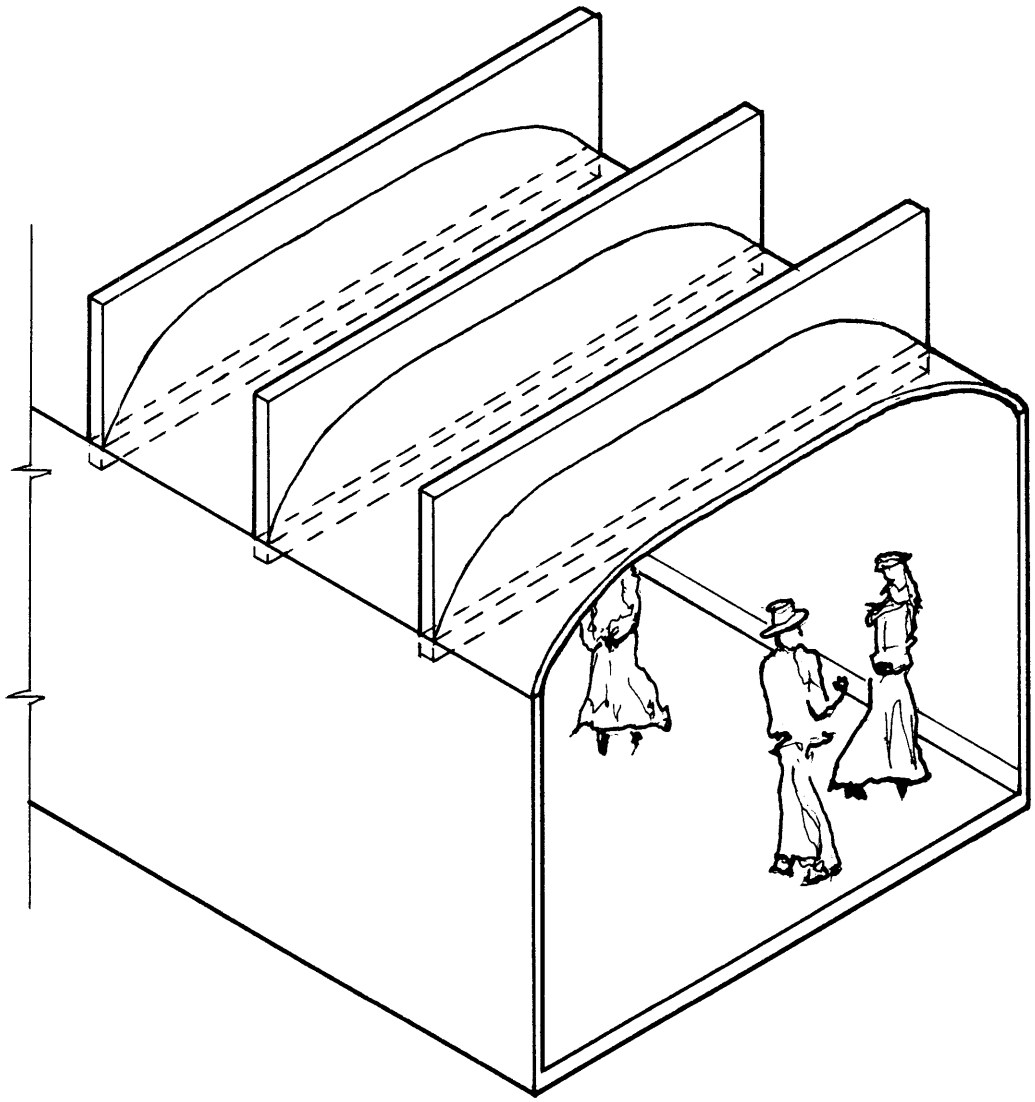

Fig. 4-20 Concrete barrel vault with stiffeners with or without underlying tie members. The structure as shown is ready to accept a floor or roof above.

to support a surmounting floor or roof. Whatever the curve of the vault a truss-like framework incorporating the above structure of the floor or roof can be constructed to take the loads of the vault

as well as the surmounting loads. If properly designed the truss like the concrete shell is capable of withstanding moment. Therefore the horizontal thrust at the wall supports can be minimalized if necessary. The truss can take moment and still remain quite light while the moment absorbing concrete shell could require extensive reinforcing of substantial weight. Wood trusses supporting suspended curved false ceilings are pictured below in both monumental and modest applications (Fig. 4-21a and b).

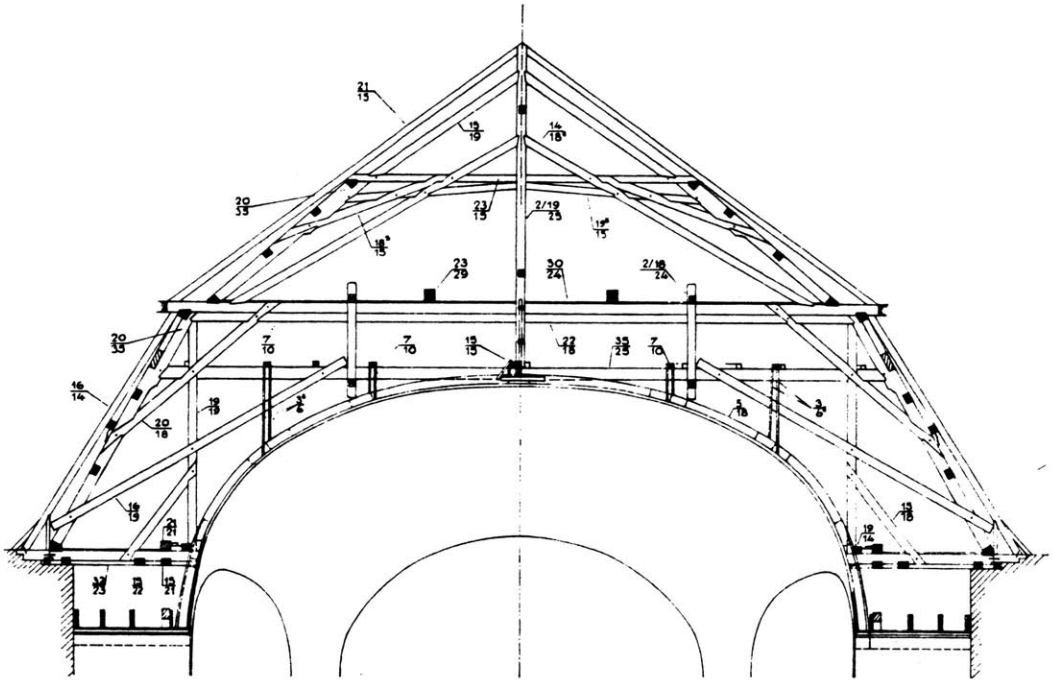

Fig. 4-21a Maria Steinbach, Germany, monumental wood truss supporting roof. False ceiling is hung from the truss.

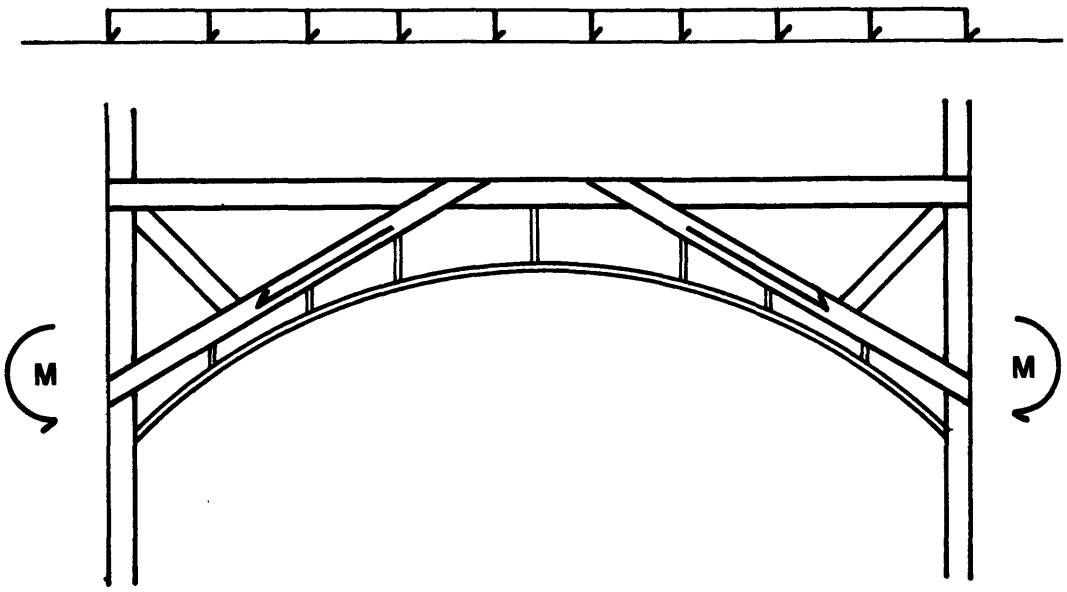

Fig. 4-21b Simple wooden truss engaging the floor joists above as a structural member. False ceiling hung below.

In Fig. 4-21b the knee braces at either side divide the above floor span into three, reducing the span and as a result, the size of the floor joists. The diagonal braces carry much of the load to the side framing members placing them in bending. Stud walls are quite capable of handling a certain amount of force due to moment. If the loads are too great for the regular stud member, the points at which the load enters the stud wall can be beefed up with additional studs. If the program allows for it, extra space above the false ceiling can be taken to construct a more rigid moment absorbing truss.

Clearly, there are an infinite number of material combinations and construction methods to an infinite number of possible physical

vault configurations. The cost may or may not justify the end result. If the nonefficient structural solutions of modern design all turned out as gracefully as the arches of Perret's sewing factory, builders could take every weekend off and architects could plan their vacations in the Mediterranean. Undoubtedly curved spanning vaults for small rectangular spaces, 10 - 40 foot range, are going to be more expensive to design and build than flat ceilings. Yet, the nonmonetary benefits can be great. Given the space limitations of most modern multi-story projects, vaulted ceilings with low profiles are certainly the most reasonable choice if one plans to design with curved forms overhead. The main point is that curved ceiling forms are an alternative for rectangular rooms, an alternative which like much of nature in the modern world, has long been overlooked.

Conclusion

I assert the importance of the conceptual viewpoint. There is the world of exact physical distances and precise object sizes. I do not assume that this is the visual world. However, it does play a significant role. I believe that what we see largely consists of what we imagine we see. The architect's job is extremely difficult because there exist innumerable people, like myself, each with his own imagination. The designer first inspects his own beliefs about the nature of the project with which he is confronted. He must then infuse his conclusions into a design which will transmit his ideas to the greatest number of people. The designer of a modern office building might ask himself what life would be like in an office of his building? What is essential about this kind of space? Is the space to be nonspecific, principly defined by the two slabs and four walls between which it rests, or will it have a form which differentiates places within the room? What will order the sense of space within these offices?

By allowing myself a reference to two non-architectural objects, I would like to infer that his answer might be colored by the images presented by two Renaissance artists. We have before us, "The Three

Graces," (1638 - 40) by Rubens, and "The Adoration of the Shepherds," (1603-7) by El Greco (Figs. C-1 and C-2).

In the Rubens' painting, the figures cling to one another engaging each other's flesh and attention. All three face inward, left foot forward, right leg bent, with just the ball of the right foot touching the ground. The characteristics of position mentioned above signify the attitude the artist toward the composition. The manner by which he conveys the expressive qualities of the configuration is inherent in his interpretation of the depth of the two-dimensional canvas. The figures interlock. They form a circle. There is nothing significant about these facts. Yet, there is a disposition about the central figure particular to this work. By the strength of her stance between the others, she orders the frontal facings of her two companions. Nonetheless, her body floats both to the front and back of those adjacent to her. The phenomenon is partly due to the orientation of the side figures. Their broadest dimension, shoulder to shoulder, aligns with the deep space of the background. The central figure's broadest dimension is coplanar with the surface of the canvas. Consequently, her body appears flattened and the least defined within the three-dimensional representation. Also, significant to this effect, is the ambiguity of the background shading about her person. The right figure is fixed against the dark foreground of the woods. The left figure is set against the light background of the sky. The middle figure oscillates between the other two, forward and backward,

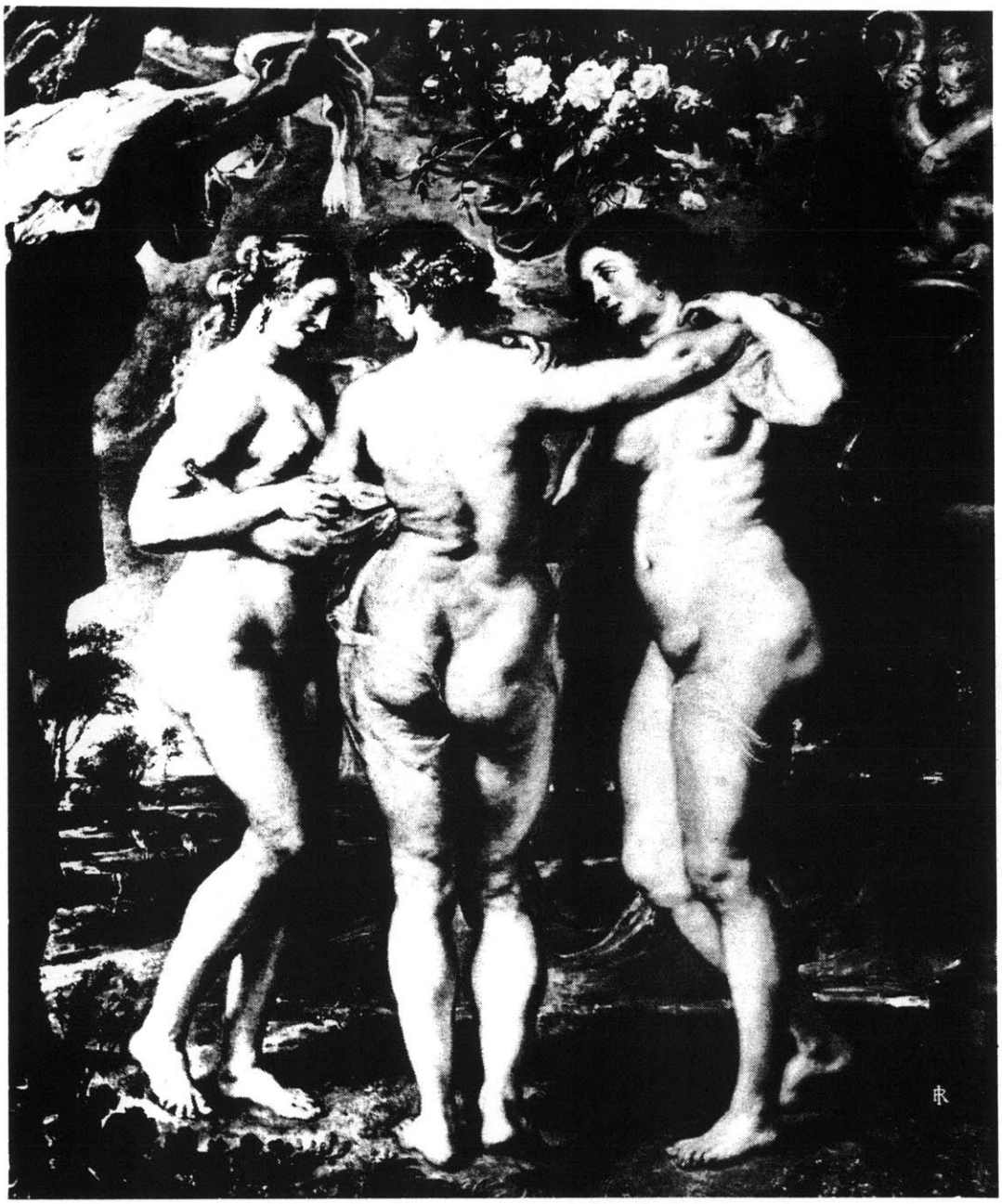

Fig. C-1 "The Three Graces," 1638 - 40, Rubens (painting rests in the Prado Museum, Madrid)

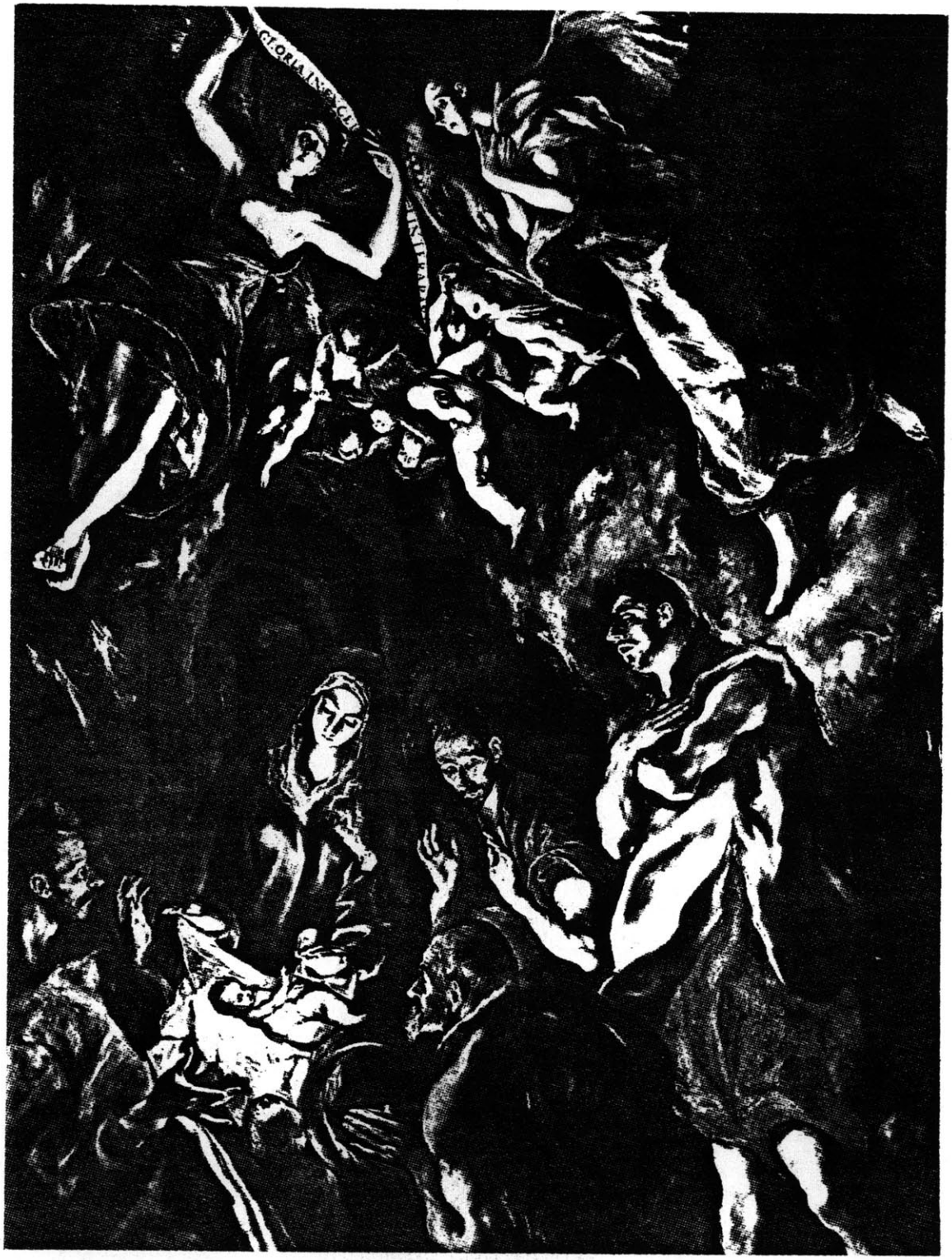

Fig. C-2 "The Adoration of the Shepherds," 1603 - 7, El Greco (painting rests in Prado Museum, Madrid)

by virtue of her position along the edge of the shallow and the deep space.

By contrast, the central figure of El Greco's "The Adoration of the Shepherds" occupies the primary position, physically and expansively. There is a hollow of space about the nest of the Christ child which is suggested by the encircling wall of shepherds and the dome-like cluster of the hovering angels. The encompassing figures are separated from each other, segmented like the piers which mark the side chapels of a small church. These are the qualities by which El Greco envisioned the model for his centralized design. The technique which transmits his inspiration to the viewer is the character of the light which emanates from the Christ child, suffusing the features of the surrounding figures. Here the effect of the chiaroscuro is not unlike that achieved in certain Baroque churches, where the opening to the lantern of the dome creates a light source.

In the Rubens and El Greco paintings there are depicted two very distinct approaches to centrality. In the first, the body of a woman is the center. Her physical energy engages the arms and bodies of her companions. Visually, the ambiguity of depth about her person suggests the presence of a void. In the second, the Christ child is a point source of illumination, radiating light onto the inner sphere of the encircling forms. To make generalizations which broadly categorize the outlook these two artists held toward composition would discredit the value their work has for the public at large. Their worth lies in the specific details of brush stroke

and subject portrayal through which the artist entrusted his contemplations to the common person. I believe the same holds true for architectural works. After my efforts to attend to the peculiarities inherent in curved spanning structures, I think it would be imprudent to conclude with sweeping generalities. I have attempted to make small departures within each chapter to summarize my intentions of analysis. My conclusions about the design preparations of architects have a greater impact when mentioned in conjunction with their work. I believe that curves have a place in the future work of architects for their spirit is sorely missing in the work of present-day architects and engineers. The farther one goes in breadth and height from the earth the more necessary is their presence, structurally and visually.

Bibliography

Billington, David Robert Maillart's Bridges "The Art of Engineering" (Princeton, 1979) Princeton University Press

Billington, David Structures and the Urban Environment (Princeton, 1978) Princeton University Press

Boylan, Barbara Jeanne The Odyssey of Intuition "A Non-Reductive Interpretation of Technology through a Case Study of Bridges" (Cambridge, 1982)

Francis, A. J. Introducing Structures (Oxford, 1980) Pergamon Press Inc.

Gheorghin, Adrian; Dragomir, Virgil Geometry of Structural Forms trans. Dinu Mangil (England, 1978) Applied Science Publishers Ltd.

Gudiol, José El Greco 1541 - 1614 (New York, 1973) The Viking Press Inc.

Hardoy, Jorge E. Pre-Columbian Cities (New York, 1973) Walker and Company

Hayden, Martin The Book of Bridges "The History, Technology and Romance of Bridges and Their Builders" (England, 1976) Marshall Cavendish Publications

Irvine, Max H. Cable Structures (Cambridge, 1981) M.I.T. University Press

Ivanhoff, Pierre Monuments of Civilization Maya (New York, 1973) Grosset and Dunlap Publishers

Joslin, Alan Royal Inhabiting the Square "A Geometry for Path and Place" (Cambridge, 1982)

Krishna, Prem Cable-Suspended Roofs (New York, 1978) McGraw-Hill Inc.

Leedy Jr., Walter C. Fan Vaulting Scientific American February, 1983 Vol. 248 No. 2

Les Albums D'Art Druet XVI A. & G. Perret (Paris, ?) Libraire de France

Podolny, Teng Design Fundamentals of Cable Roof Structures (Pittsburgh, 1969) U. S. Steel Corp, publication

Porter, Arthur Kingsley The Construction of Lombard and Gothic Vaults (New Haven, 1911) Yale University Press

Rohlfs, Gerhard Primitive Construzioni a Cupola in Europa (Firenze, 1963)

Sachse, H. J. Barocke Dachwerke, Decken und Gewölbe (Berlin, 1975) Gebr. Mann Verlag Publishers

Sacriste, Eduardo; Kechichian, Pedro Antonio; MacIntosh, Guillermo Viviendas con Bovedas (Buenos Aires, ?) Librería Técnica

Salvadori, Mario Why Buildings Stand Up "The Strength of Architecture" (New York, 1982) McGraw-Hill

Stechow, Wolfgang Rubens and the Classical Tradition (Cambridge, 1968) Harvard University Press

Thompson, D'arcy W. On Growth and Form ed. John Tyler Bonner (England, 1971) Hazell Watson & Viney Ltd.

Zalewski, Waclaw P. Notes on Structural Form: Chapters 1 - 7
Chapter 1 "Synthesis of Behavior of Structures"
Chapter 2 "Stresses and Strains"
Chapter 3 "Materials Used in Structures and Forces Acting on Them"
Chapter 4 "Linear Funicular Structures"
Chapter 5 "Membranes and Shells"
Chapter 6 "Simple Beams"
Chapter 7 "Continuous Beams, Frames, Slabs"

Zalewski, Waclaw P. Formas Estructurales de Fuerza Constante

Illustrations

Final Design Competition Entry: Fall Term, 1982
Structural Engineering Laboratory 1.105J/4.315J
Author photographed

Fig. 1 Fan vaulting of King's College Chapel, completed 1515.
borrowed from: Leedy Jr. Walter C. Fan Vaulting Scientific American February, 1983 Vol. 248 No. 2 p.134

Fig. 2 Tamar at Saltash, Isambard Brunel, completed 1858.
borrowed from: Hayden, Martin The Book of Bridges (England, 1976) Marshall Cavendish Publications p. 82

Fig. 3 Bayonne Bridge, New York State, completed 1932.
borrowed from: Hayden, Martin The Book of Bridges p. 95

Fig 1-7 Corrugated shell of the great sea clam.
Author photographed

Fig. 2-6 Roman aqueduct in Segovia, Spain.
borrowed from: Hayden, Martin The Book of Bridges p. 22

Fig. 2-7 Snow bridge on fire escape in Somerville, winter 1983.
Author photographed

Fig. 4-2 Olmec sarcophagus from La Venta, Mexico, 800 - 400 B. C..
Author photographed

Fig. 4-3 Maya stone corbel arch, Palenque, Mexico, classic period 300 - 900 B. C..
Author photographed

Fig. 4-4 Modified Maya stone corbel arch, Chichén Itzá Viejo, Mexico, classic period 300 - 900 A. D..
Author photographed

Fig. 4-5a Pension in Oaxaca, Mexico, built 1970.
Author photographed

Fig. 4-5b Sewing factory, Paris, France, Auguste Perret, completed 1919.
borrowed from: Les Albums D'Art Druet XVI A. & G. Perret (Paris, ?) Librairie de France, plate IX

Fig. 4-10 Two hypars intersecting in ridges which diagonally connect the four corners.
borrowed from: Gheorghin, Adrian; Dragomir, Virgil Geometry of Structural Forms trans. Dinu Manoil (London, 1978) Applied Science Publishers Ltd. Fig. 141 p. 135

Fig. 4-12 Conoid intersected by slanted plane to show negative total curvature.
borrowed from: Zalewski, Waclaw P. Membranes and Shells Fig. 5.51 p. 37

Fig. 4-14 Ceiling/roof made from four hypars set against one another.
borrowed from: Zalewski, Waclaw P. Membranes and Shells p. 35

Fig. 4-17 Classic Gothic ribbed vault.
borrowed from: Leedy Jr., Walter C. Fan Vaulting Scientific American February, 1983 Vol. 248 No. 2 p. 136

Fig 4-18 Fan vault created from fan-vault conoids.
borrowed from: Leedy Jr., Walter C. Fan Vaulting Scientific American p. 136

Fig. 4-19a and b Multi-story project for inustrial application in Poland, 1958, Waclaw Zalewski, engineer.
borrowed from: Zalewski, Waclaw P. Fuerzas Estructurales de Fuerza Constante p. 78

Fig. 4-21a Maria Steinbach, Germany, monumental wood truss supporting roof.
borrowed from: Sachse, H. J. Barocke Dackwerke, Decken und Gewölbe (Berlin, 1975) Gebr. Mann Verlag Publishers plate 186

Fig. C-1 "The Three Graces," 1638 - 40, Rubens (Prado, Madrid).
borrowed from: Stechow, Wolfgang Rubens and the Classical Tradition (Cambridge, 1968) Harvard University Press Fig. 39 p. 52

Fig. C-2 "The Adoration of the Shepherds," 1603 - 7, El Greco (Prado, Madrid).
borrowed from: Gudiol, Jose El Greco 1541 - 1614 (New York, 1973) The Viking Press Inc., Fig. 208 p. 232